ATLANTIC
Fluid Tech

GENERAL CATALOGUE **20.1**

Innovative & High Performance Hydraulics

ATLANTIC
Fluid Tech

SECTION 1

Relief Valves

MANAGEMENT SYSTEM CERTIFICATION
DNV·GL
ISO 9001 = ISO 14001
OHSAS 18001

RELIEF VALVES

ATLANTIC Fluid Tech

Hydraulic scheme	Valve description	Valve type	Rated flow (l/min)	Max. pressure (bar)	Installation	Main port size or cavity type	Page
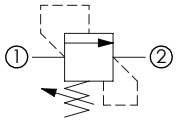	CPLN-005-DPNA	Direct acting, poppet type	1,5	460	Cartridge	VP000005	1.01.**010**
	CPLN-010-DHNA	Direct acting, poppet type	3	350	Cartridge	SAE-08-2N	1.01.**020** 1.01.**030**
	KPLN-010-DPNA	Direct acting, poppet type	3	350	In line	G1/4" - G3/8"	1.01.**040**
	CPLN-020-DPNA	Direct acting, poppet type	20	420	Cartridge	SAE-08-2N	1.01.**050** 1.01.**060**
	KPLN-020-DPNA	Direct acting, poppet type	20	350	In line	G1/4" - G3/8"	1.01.**070**
	CPLN-030-DPNA	Direct acting, poppet type	30	420	Cartridge	VP000008	1.01.**080**
	CPLN-030-DHNA	Direct acting, poppet type	30	350	Cartridge	VP000008	1.01.**090**
	CPLN-030-DHAA	Direct acting, poppet type	30	350	Cartridge	VP000008	1.01.**100**
	KPLN-030-DPNA	Direct acting, poppet type	30	350	In line	G3/8" - G1/2"	1.01.**110**
	CPLN-080-DPNA	Direct acting, poppet type	80	420	Cartridge	VP000086	1.01.**120**
	KPLN-080-DPNA	Direct acting, poppet type	80	350	In line	G1/2" - G3/4"	1.01.**130**
	CPLN-120-DPNA	Direct acting, poppet type	120	350	Cartridge	VP000388	1.01.**140**
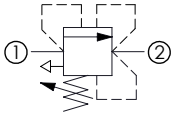	CPLT-030-DPNA	Direct acting, poppet type, compensated	30	350	Cartridge	VP000008	1.02.**150**
	CPLT-030-DHNA	Direct acting, poppet type, compensated	30	350	Cartridge	VP000008	1.02.**160**
	CPLT-080-DHNA	Direct acting, poppet type, compensated	80	420	Cartridge	VP000086	1.02.**170**
	CPLT-080-DHNA	Direct acting, poppet type, chamber vented	80	420	Cartridge	SAE-16-3C	1.02.**180**
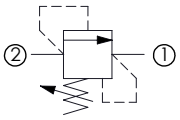	CPLN-040-DHGD	Differential, poppet type	40	350	Cartridge	VP000080	1.03.**190**
	CPLN-090-DHGA	Direct acting, poppet type	90	380	Cartridge	VP000249	1.03.**200**
	CPAN-090-DHGA	Direct, poppet type, anticavitation	90	380	Cartridge	VP000249	1.03.**210**
	CPLN-150-DHGD	Differential, poppet type	150	350	Cartridge	VP000070	1.03.**220**
	KPLN-150-DHGD	Differential, poppet type	150	350	In line	G1/2" - G3/4"	1.03.**230**
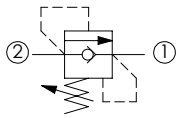	CPLN-160-DHGA	Direct, poppet type	160	400	Cartridge	VP000250	1.03.**240**
	CPAN-160-DHGA	Direct, poppet type, anticavitation	160	400	Cartridge	VP000250	1.03.**250**
	CPLN-250-DHGD	Differential, poppet type	250	350	Cartridge	VP000154	1.03.**260**
	KPLN-250-DHGD	Differential, poppet type	250	350	In line	G1"	1.03.**270**
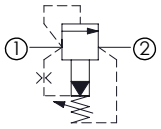	CPLN-120-PSNA	Pilot operated, spool type	120	350	Cartridge	SAE-10-2N	1.04.**280**
	KPLN-120-PSNA	Pilot operated, spool type	120	350	In line	G3/8" - G1/2"	1.04.**290**
	CPLN-300-PSNA	Pilot operated, spool type	300	350	Cartridge	SAE-16-2N	1.04.**300**
	CPLN-500-PHNA	Pilot operated, spool type	500	350	Cartridge	SAE-20-2N	1.04.**310**
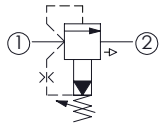	CPLT-120-PSNA	Pilot operated, spool type, compensated	120	350	Cartridge	SAE-10-2N	1.05.**320**
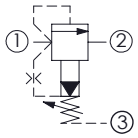	CPLV-120-PSNA	Pilot operated, spool type	120	350	Cartridge	SAE-10-2N	1.06.**330**
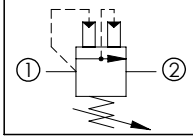	CPSK-001-PPNA	Direct acting, poppet type, kick down type	1	350	Cartridge	SAE-10-2N	1.07.**340**

RELIEF VALVE

CPLN-005-DPNA

DIRECT ACTING WITH FILTER

ATLANTIC Fluid Tech

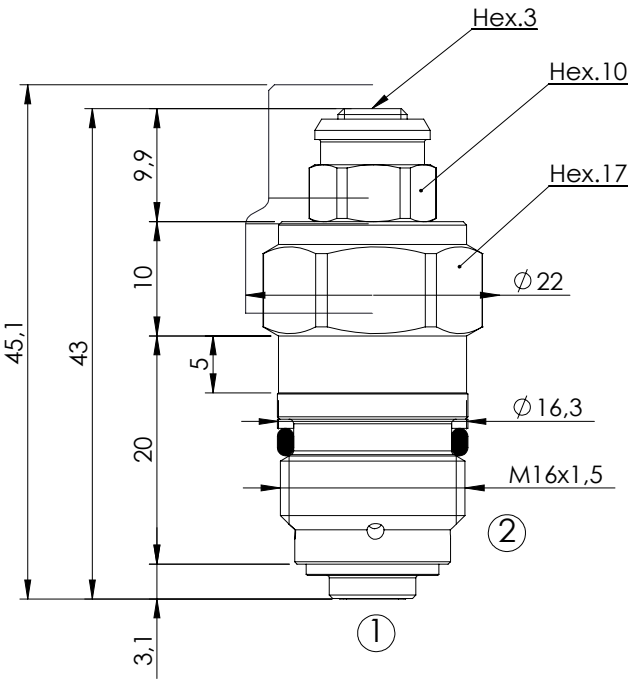

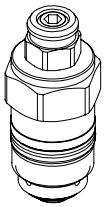

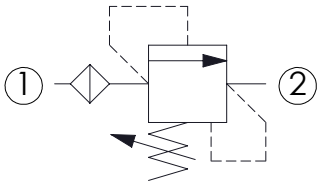

SPECIFICATIONS

Max. operating pressure:	460 bar
Rated flow:	1,5 l/min
Cavity:	VP000005
Weight:	0,05 kg

SEALING CAP

Ordering code:

ST000014

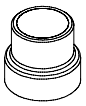

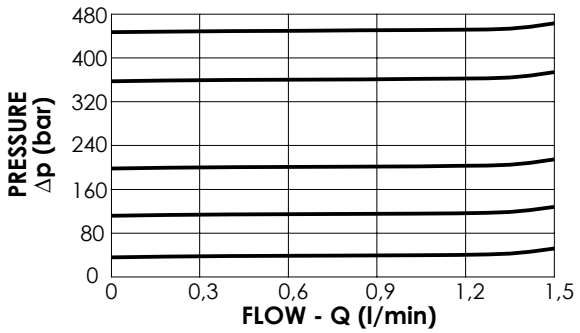

NOTES

Installation torque:	27 - 33 Nm
Seal kit:	RC700005

ORDERING CODES

Quick code	Description	Standard setting (bar/cracking pressure)	Adjustment range (bar)	Pressure increase (bar/turn)
CP000015	CPLN-005-DPNA-PF-005-N460	460	150-460	236
CP000002	CPLN-005-DPNA-PF-005-N350	350	120-350	165
CP000029	CPLN-005-DPNA-PF-005-N200	200	100-200	75
CP000030	CPLN-005-DPNA-PF-005-N100	100	25-100	41
CP000277	CPLN-005-DPNA-PF-005-N040	40	10-40	22

RELIEF VALVE

CPLN-010-DHNA

DIRECT ACTING HARDENED SEAT

ATLANTIC Fluid Tech

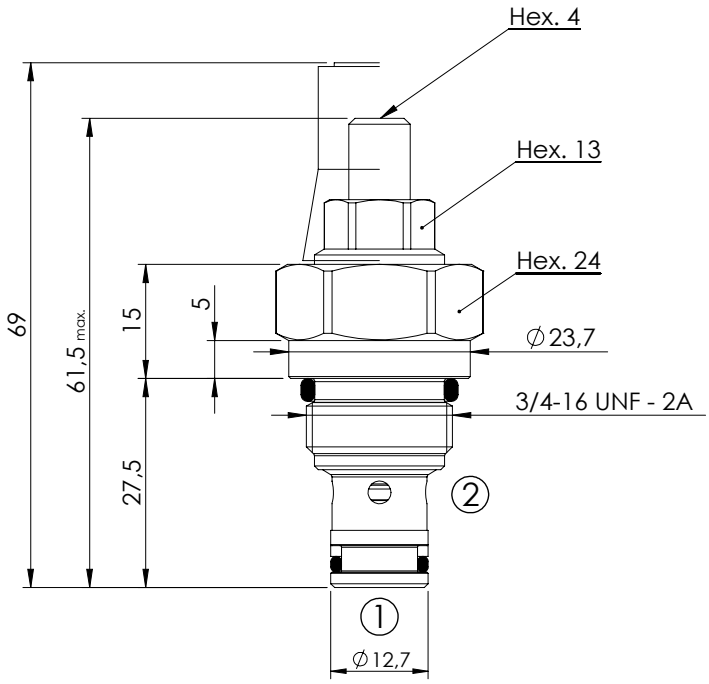

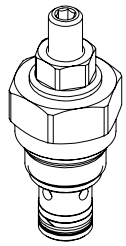

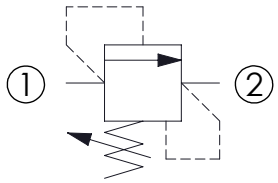

SPECIFICATIONS

Max. operating pressure:	350 bar
Rated flow:	3 l/min
Cavity:	SAE-08-2N
Weight:	0,1 kg

SEALING CAP

Ordering code:

AT000020

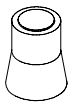

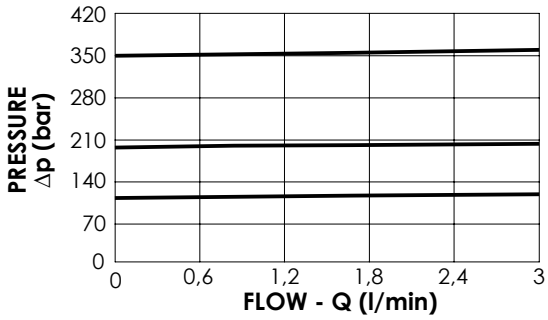

NOTES

Installation torque:	45 - 50 Nm
Seal kit:	RA700081

ORDERING CODES

Quick code	Description	Standard setting (bar, Q=0,2 l/min)	Adjustment range (bar)	Pressure increase (bar/turn)
CP000006	CPLN-010-DHNA-SN-S08-N350	350	140-350	142
CP000055	CPLN-010-DHNA-SN-S08-N200	200	90-210	87
CP000056	CPLN-010-DHNA-SN-S08-N100	100	35-110	47

RELIEF VALVE

CPLN-010-DHNA

DIRECT ACTING HARDENED SEAT

ATLANTIC Fluid Tech

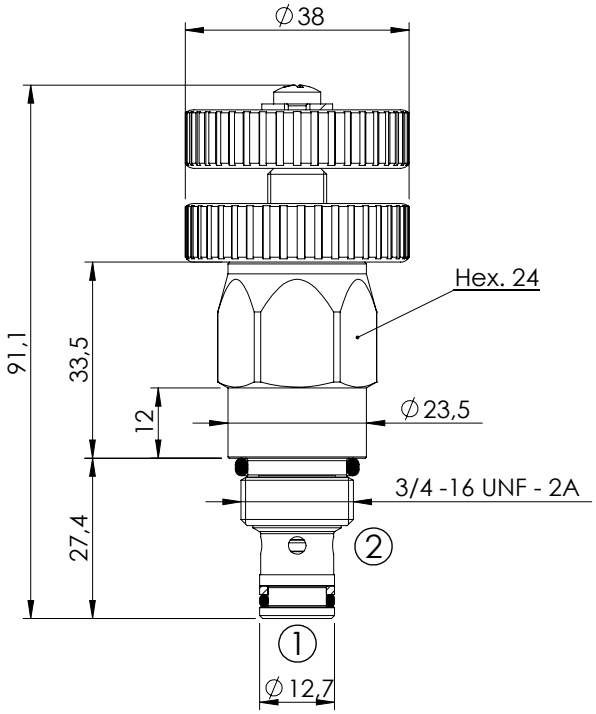

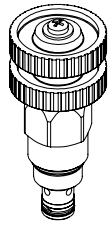

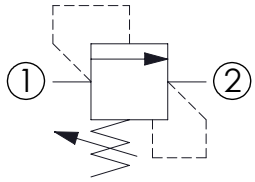

SPECIFICATIONS

Max. operating pressure:	**350 bar**
Rated flow:	**3 l/min**
Cavity:	**SAE-08-2N**
Weight:	**0,18 kg**

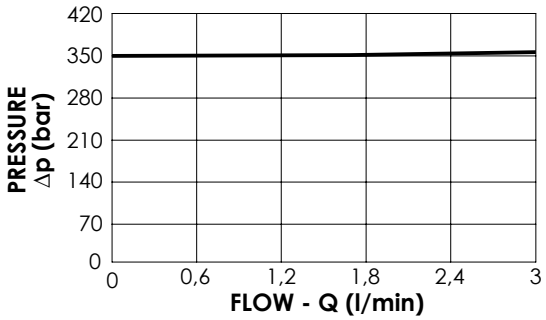

NOTES

Installation torque:	**45 - 50 Nm**
Seal kit:	**RA700081**

ORDERING CODES

Quick code	Description	Standard setting (bar, cracking pressure)	Adjustment range (bar)	Pressure increase (bar/turn)
CP000172	**CPLN-010-DHNA-VN-S08-N350**	**350**	**20-350**	**83**

RELIEF VALVE IN BODY

KPLN-010-DPNA

DIRECT ACTING HARDENED SEAT

ATLANTIC Fluid Tech

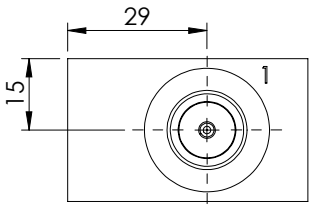

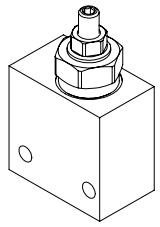

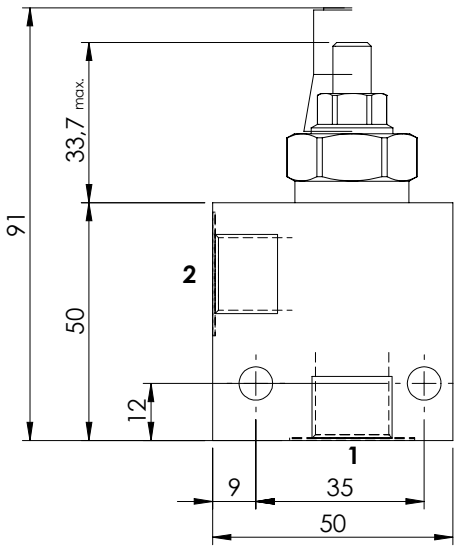

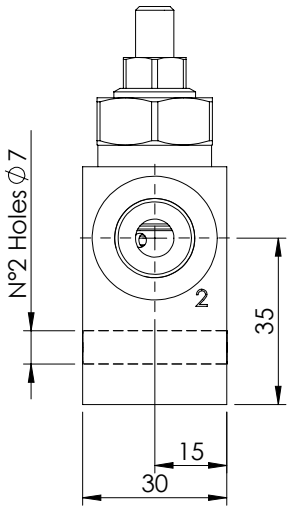

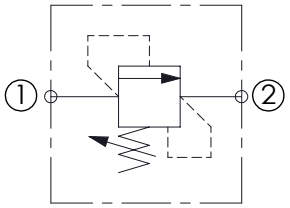

SPECIFICATIONS

Max. operating pressure:	**350 bar**
Rated flow:	**3 l/min**
Manifold:	**Aluminium**
Weight:	**0,25 kg**

SEALING CAP

Ordering code:

AT000020

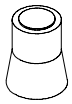

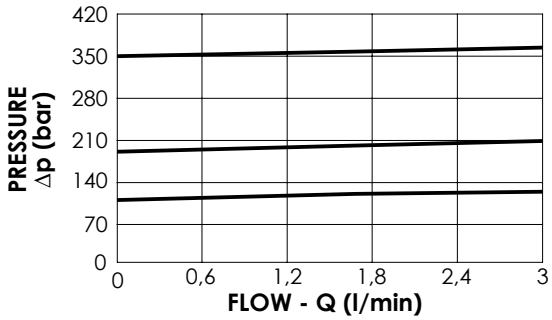

ORDERING CODES

Quick code	Description	Main ports size	Standard setting (bar, Q=0.2 l/min)	Adjustm. range (bar)	Pressure increase (bar/turn)
KP000041	**KPLN-010-DPNA-SN-G38-N350**	P,T : **G 3/8"**	**350**	**140-350**	**142**
KP000042	**KPLN-010-DPNA-SN-G38-N200**	P,T : **G 3/8"**	**200**	**90-210**	**87**
KP000043	**KPLN-010-DPNA-SN-G38-N100**	P,T : **G 3/8"**	**100**	**35-110**	**47**
KP000044	**KPLN-010-DPNA-SN-G14-N350**	P,T : **G 1/4"**	**350**	**140-350**	**142**
KP000045	**KPLN-010-DPNA-SN-G14-N200**	P,T : **G 1/4"**	**200**	**90-210**	**87**
KP000046	**KPLN-010-DPNA-SN-G14-N100**	P,T : **G 1/4"**	**100**	**35-110**	**47**

RELIEF VALVE

CPLN-020-DPNA

DIRECT ACTING STABILIZED PISTON

ATLANTIC Fluid Tech

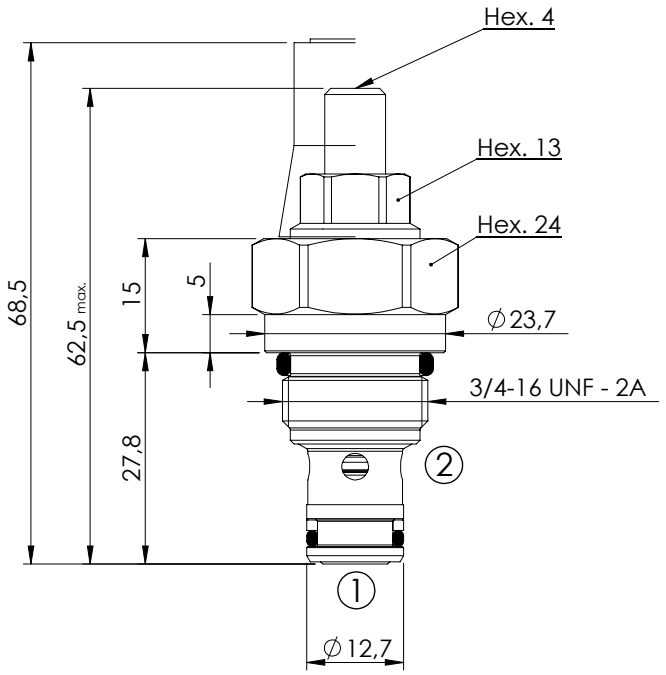

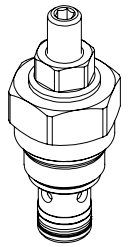

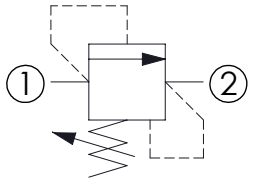

SPECIFICATIONS

Max. operating pressure:	420 bar
Rated flow:	20 l/min
Cavity:	SAE-08-2N
Weight:	0,1 kg

SEALING CAP

Ordering code:

AT000020

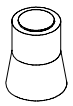

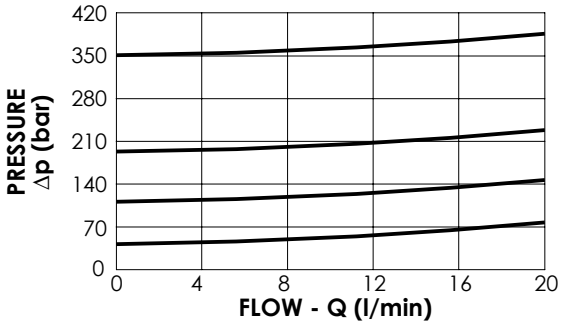

NOTES

Installation torque:	45-50 Nm
Seal kit:	RA700081

ORDERING CODES

Quick code	Description	Standard setting (bar, Q=5 l/min)	Adjustment range (bar)	Pressure increase (bar/turn)
CP000168	CPLN-020-DPNA-SN-S08-N420	350	200-420	207
CP000025	CPLN-020-DPNA-SN-S08-N350	350	175-350	177
CP000007	CPLN-020-DPNA-SN-S08-N200	200	105-210	80
CP000028	CPLN-020-DPNA-SN-S08-N100	100	35-140	49
CP000027	CPLN-020-DPNA-SN-S08-N050	50	10-70	26

RELIEF VALVE

CPLN-020-DPNA

DIRECT ACTING

ATLANTIC Fluid Tech

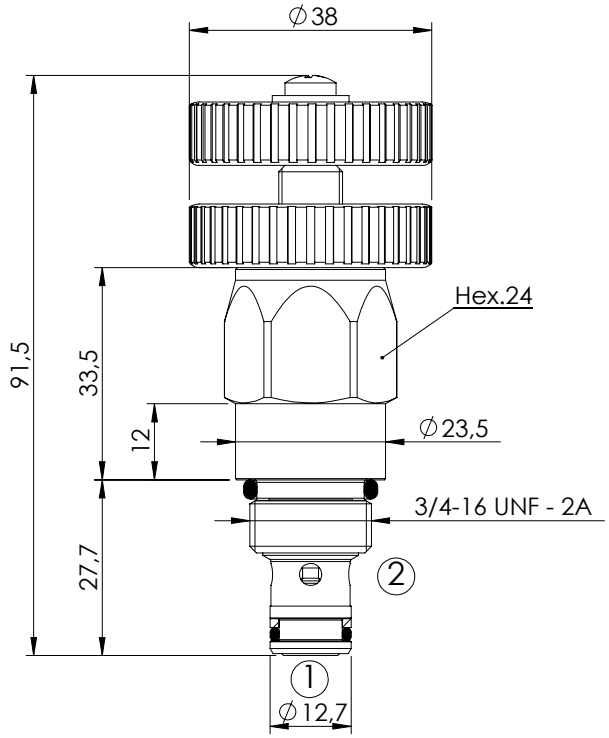

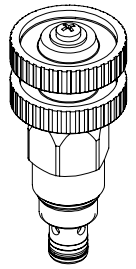

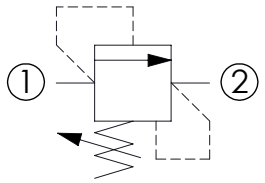

SPECIFICATIONS

Max. operating pressure:	**350 bar**
Rated flow:	**20 l/min**
Cavity:	**SAE-08-2N**
Weight:	**0,18 kg**

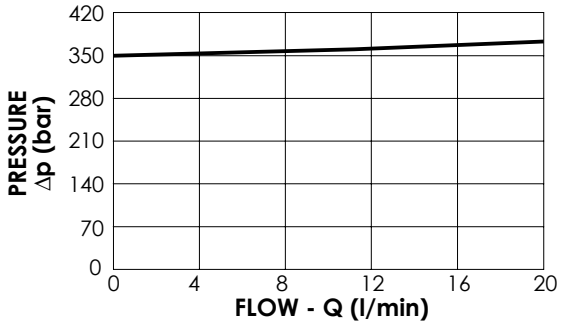

NOTES

Installation torque:	**45 - 50 Nm**
Seal kit:	**RA700081**

ORDERING CODES

Quick code	Description	Standard setting (bar, Q=5 l/min)	Adjustment range (bar)	Pressure increase (bar/turn)
CP000173	**CPLN-020-DPNA-VN-S08-N350**	**350**	**20-350**	**56**

RELIEF VALVE IN BODY

KPLN-020-DPNA

DIRECT ACTING STABILIZED PISTON

ATLANTIC Fluid Tech

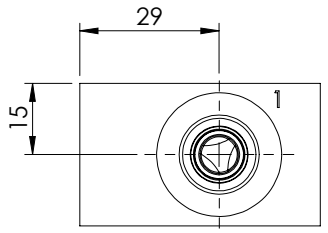

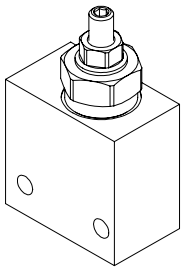

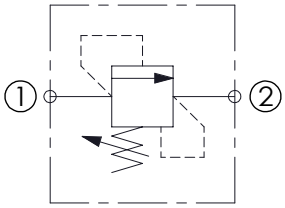

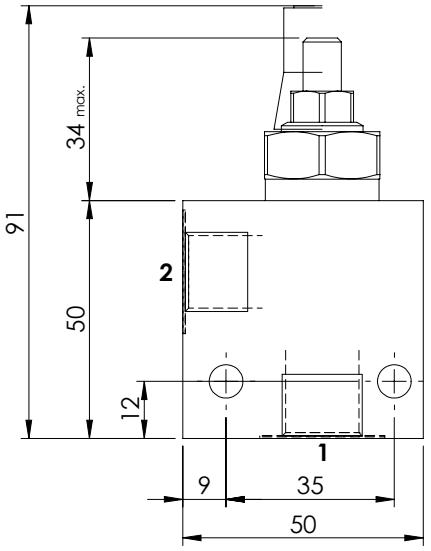

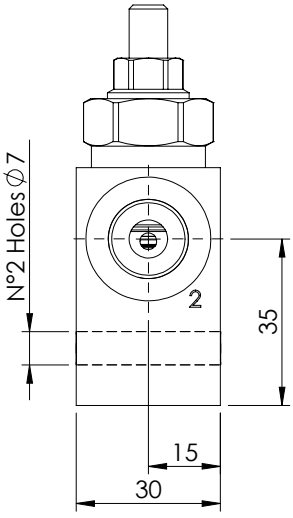

SPECIFICATIONS

Max. operating pressure:	350 bar
Rated flow:	20 l/min
Manifold:	Aluminium
Weight:	0,25 kg

SEALING CAP

Ordering code:

AT000020

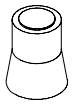

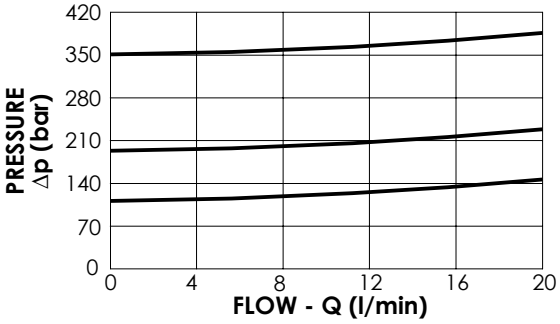

ORDERING CODES

Quick code	Description	Main ports size	Standard setting (bar, Q=5 l/min)	Adjustm. range (bar)	Pressure increase (bar/turn)
KP000010	KPLN-020-DPNA-SN-G38-N350	P,T : G 3/8"	350	175-350	177
KP000037	KPLN-020-DPNA-SN-G38-N200	P,T : G 3/8"	200	105-210	80
KP000038	KPLN-020-DPNA-SN-G38-N100	P,T : G 3/8"	100	35-140	49
KP000008	KPLN-020-DPNA-SN-G14-N350	P,T : G 1/4"	350	175-350	177
KP000039	KPLN-020-DPNA-SN-G14-N200	P,T : G 1/4"	200	105-210	80
KP000040	KPLN-020-DPNA-SN-G14-N100	P,T : G 1/4"	100	35-140	49

RELIEF VALVE

CPLN-030-DPNA

DIRECT ACTING STABILIZED PISTON

ATLANTIC Fluid Tech

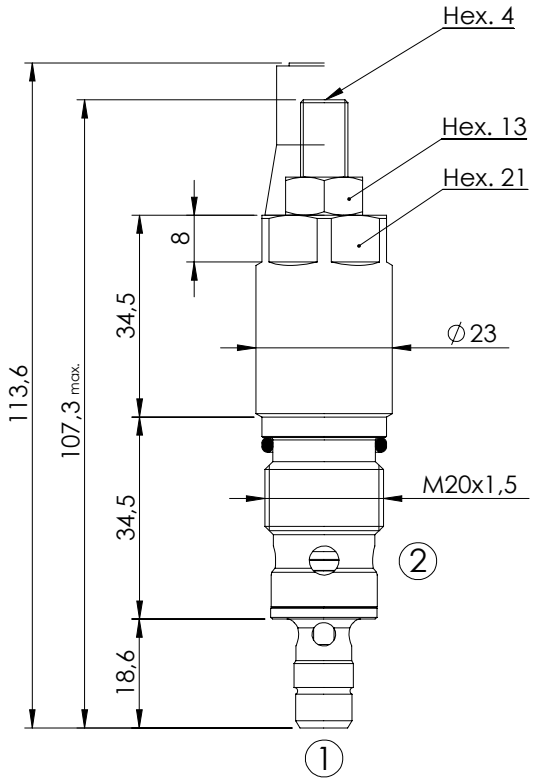

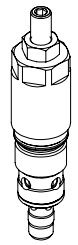

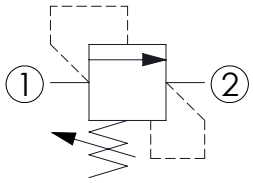

SPECIFICATIONS

Max. operating pressure:	420 bar
Rated flow:	30 l/min
Cavity:	VP000008
Weight:	0,17 kg

SEALING CAP

Ordering code:

AT000020

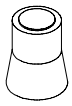

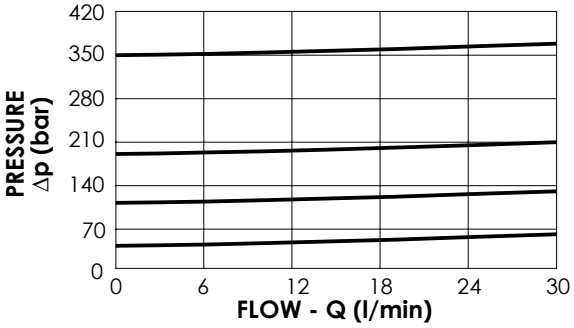

NOTES

Installation torque:	40 - 45 Nm
Seal kit:	RC700008

ORDERING CODES

Quick code	Description	Standard setting (bar, Q=5 l/min)	Adjustment range (bar)	Pressure increase (bar/turn)
CP000124	CPLN-030-DPNA-HN-008-N420	350	250-420	104
CP000001	CPLN-030-DPNA-HN-008-N350	350	100-350	91
CP000019	CPLN-030-DPNA-HN-008-N200	200	50-210	42
CP000020	CPLN-030-DPNA-HN-008-N100	100	30-100	20
CP000032	CPLN-030-DPNA-HN-008-N050	50	10-50	10

RELIEF VALVE

CPLN-XXX-DHNA

DIRECT ACTING STABILIZED PISTON HARDENED SEAT

ATLANTIC Fluid Tech

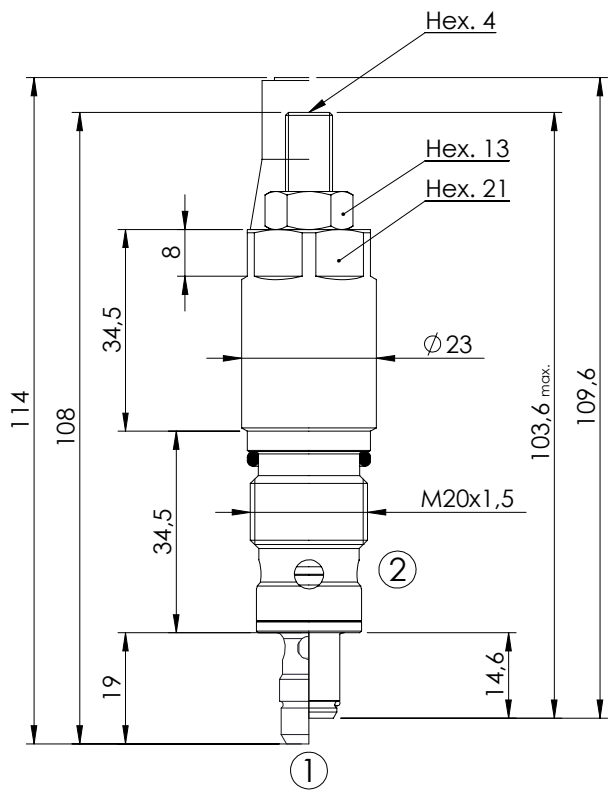

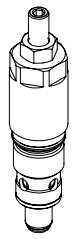

With Filter	Without Filter
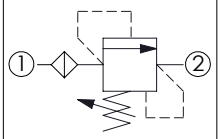	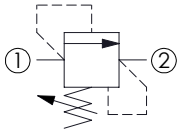

SPECIFICATIONS

Max. operating pressure:	500 bar
Max. operating pressure on T:	350 bar
Rated flow:	See table
Cavity:	VP000008
Weight:	0,17 kg

SEALING CAP

Ordering code:
AT000020

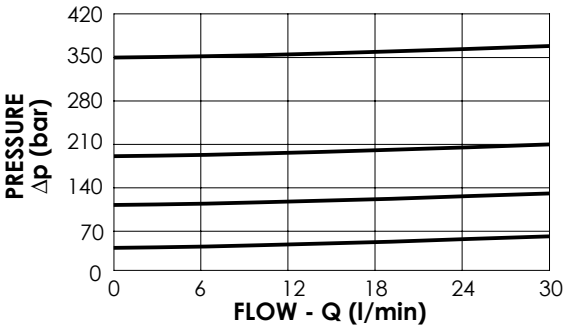

NOTES

Installation torque:	40-45 Nm
Seal kit:	RC700008

ORDERING CODES

Quick code	Description	Rated flow (l/min)	Standard setting (bar, Q=5 l/min)	Adjustment range (bar)	Pressure increase (bar/turn)	Options
CP000401	CPLN-023-DHNA-CF-008-N500	20	350	150 - 500	150	With Filter
CP000411	CPLN-030-DHNA-HF-008-N420	30	350	250-420	104	With Filter
CP000082	CPLN-030-DHNA-HN-008-N350	30	350	100-350	91	Without Filter
CP000083	CPLN-030-DHNA-HN-008-N200	30	200	50-210	42	Without Filter
CP000084	CPLN-030-DHNA-HN-008-N100	30	100	30-100	20	Without Filter
CP000085	CPLN-030-DHNA-HN-008-N050	30	50	10-50	10	Without Filter

RELIEF VALVE

CPLN-XXX-DHAA

DIRECT ACTING
STABILIZED PISTON
HARDENED SEAT

ATLANTIC Fluid Tech

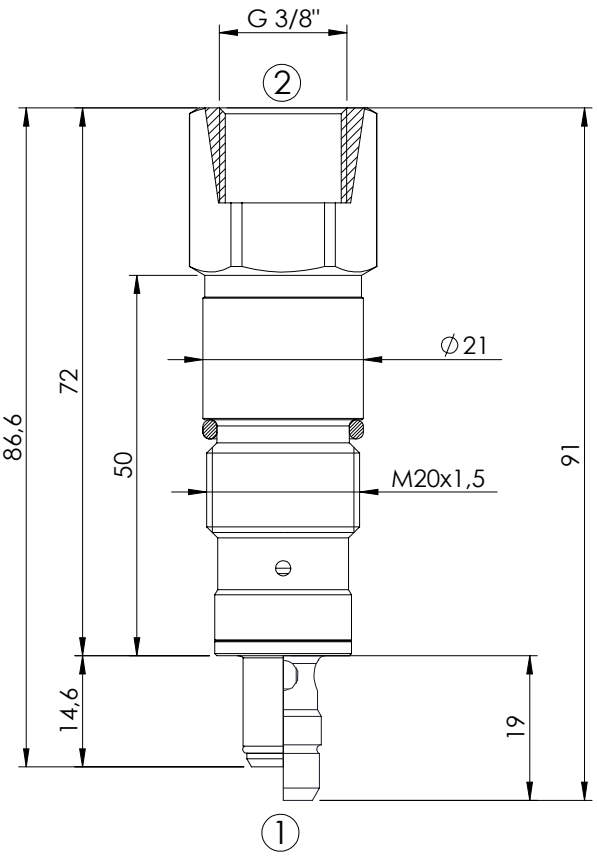

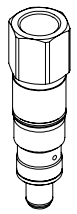

With Filter	Without Filter
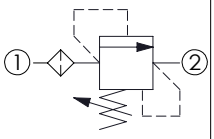	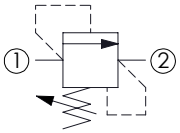

SPECIFICATIONS

Max. operating pressure:	500 bar
Max. operating pressure on T:	350 bar
Rated flow:	See table
Cavity:	VP000008
Weight:	0,14 kg

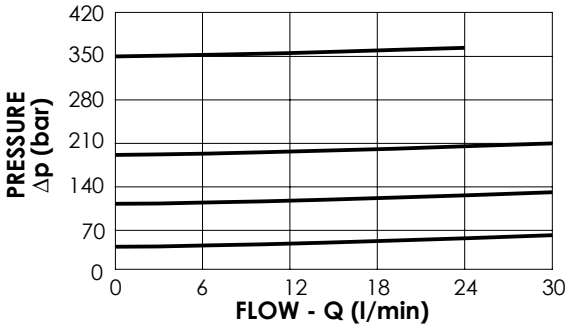

NOTES

Installation torque:	40-45 Nm

ORDERING CODES

Quick code	Description	Rated flow (l/min)	Standard setting (bar, Q=5 l/min)	Adjustment range (bar)	Pressure increase (bar/turn)	Options
CP000266	CPLN-023-DHAA-CF-008-N500	20	350	150-500	167	With Filter
CP000141	CPLN-030-DHAA-GN-008-N350	30	350	100-350	102	Without Filter
CP000190	CPLN-030-DHAA-GN-008-N200	30	200	50-210	46	Without Filter
CP000191	CPLN-030-DHAA-GN-008-N100	30	100	30-100	22	Without Filter
CP000192	CPLN-030-DHAA-GN-008-N050	30	50	10-50	11	Without Filter

RELIEF VALVE IN BODY

KPLN-030-DPNA

DIRECT ACTING STABILIZED PISTON

ATLANTIC Fluid Tech

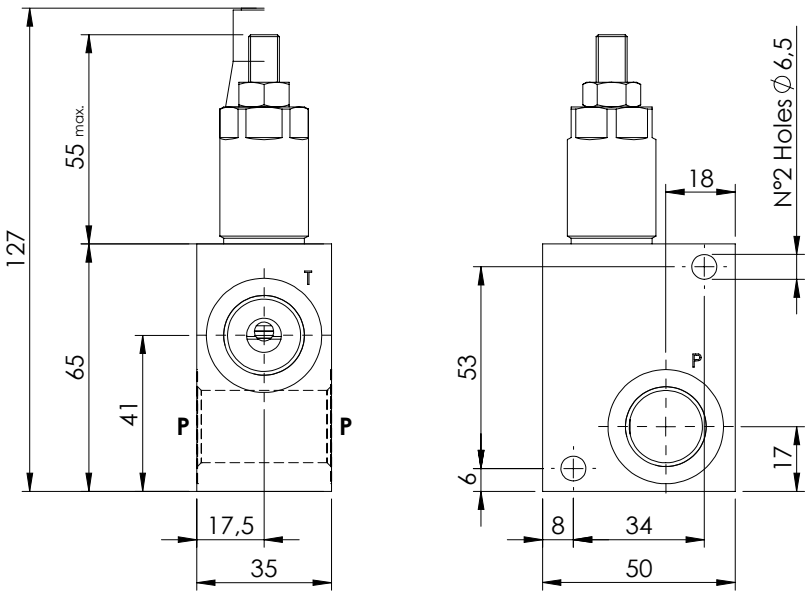

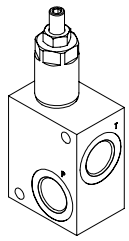

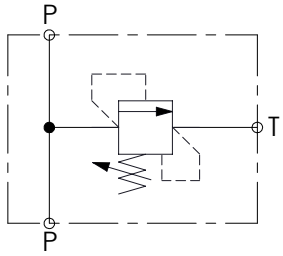

SPECIFICATIONS

Max. operating pressure:	350 bar
Rated flow:	30 l/min
Manifold:	Aluminium
Weight:	0,4 kg

SEALING CAP

Ordering code:

AT000020

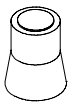

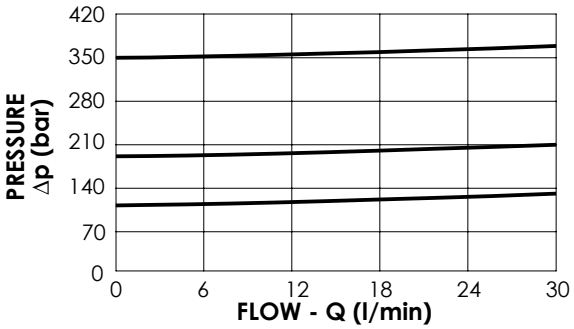

NOTES

*Codes available with steel manifold.

ORDERING CODES

Quick code	Description	Main ports size	Standard setting (bar, Q=5 l/min)	Adjustm. range (bar)	Pressure increase (bar/turn)
KP000006	**KPLN-030-DPNA-HN-G12-N350**	P,T: **G 1/2"**	**350**	**100-350**	**91**
KP000005	**KPLN-030-DPNA-HN-G12-N200**	P,T: **G 1/2"**	**200**	**50-210**	**42**
KP000004	**KPLN-030-DPNA-HN-G12-N100**	P,T: **G 1/2"**	**100**	**30-100**	**20**
KP000003	**KPLN-030-DPNA-HN-G38-N350**	P,T: **G 3/8"**	**350**	**100-350**	**91**
KP000002	**KPLN-030-DPNA-HN-G38-N200**	P,T: **G 3/8"**	**200**	**50-210**	**42**
KP000001	**KPLN-030-DPNA-HN-G38-N100**	P,T: **G 3/8"**	**100**	**30-100**	**20**

RELIEF VALVE

CPLN-080-DPNA

DIRECT ACTING STABILIZED PISTON

ATLANTIC Fluid Tech

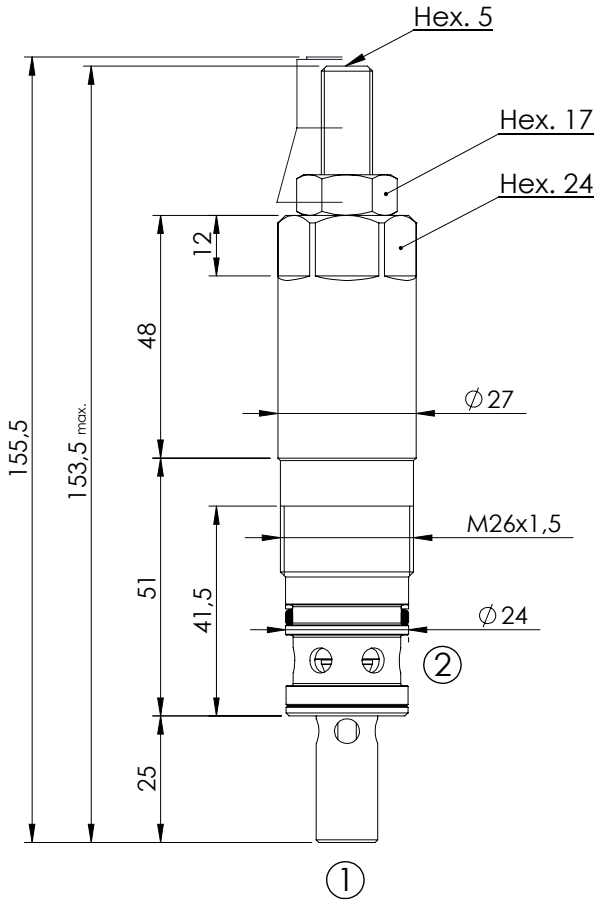

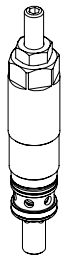

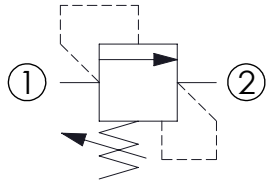

SPECIFICATIONS

Max. operating pressure:	420 bar
Rated flow:	80 l/min
Cavity:	VP000086
Weight:	0,34 kg

SEALING CAP

Ordering code:
AT000021

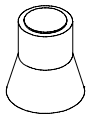

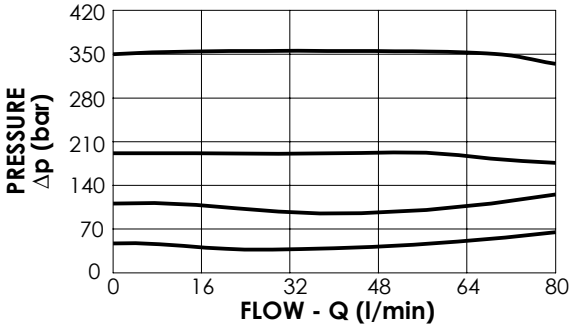

NOTES

Installation torque:	80 - 95 Nm
Seal kit:	RC700086

ORDERING CODES

Quick code	Description	Standard setting (bar, Q=5 l/min)	Adjustment range (bar)	Pressure increase (bar/turn)
CP000180	CPLN-080-DPNA-HN-086-N420	350	150-420	53
CP000026	CPLN-080-DPNA-HN-086-N350	350	100-350	42
CP000076	CPLN-080-DPNA-HN-086-N200	200	60-210	24
CP000077	CPLN-080-DPNA-HN-086-N100	100	25-100	13
CP000099	CPLN-080-DPNA-HN-086-N050	50	5-50	9

RELIEF VALVE IN BODY

KPLN-080-DPNA

DIRECT ACTING STABILIZED PISTON

ATLANTIC Fluid Tech

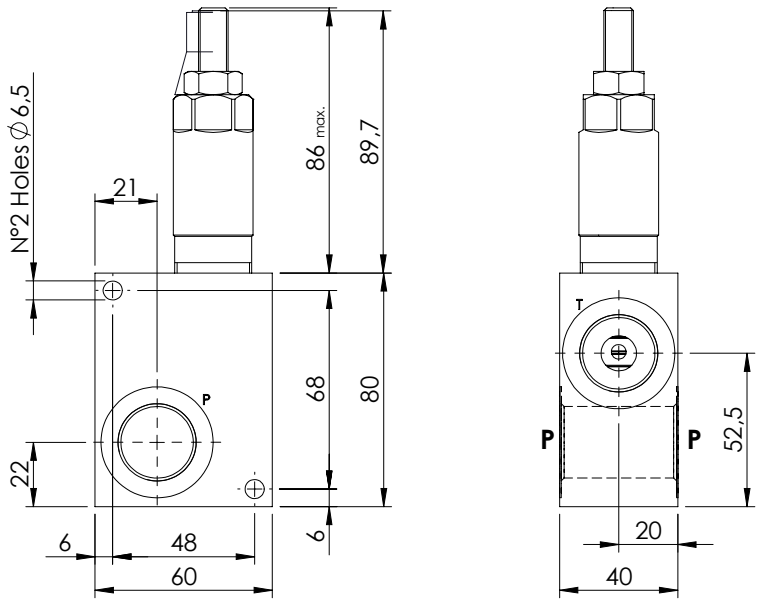

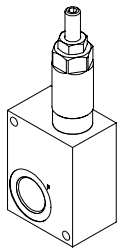

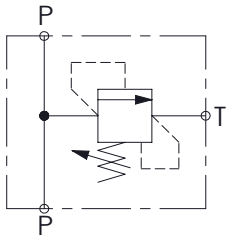

SPECIFICATIONS

Max. operating pressure:	**350 bar**
Rated flow:	**80 l/min**
Manifold:	**Aluminium**
Weight:	**0,68 kg**

SEALING CAP

Ordering code:
AT000021

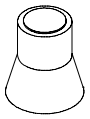

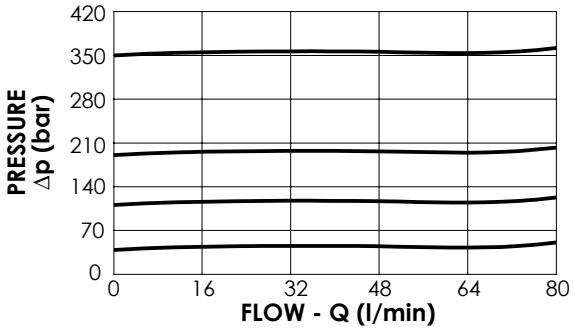

NOTES

***Codes available with steel manifold.**

ORDERING CODES

Quick code	Description	Main ports size	Standard setting (bar, Q=5 l/min)	Adjustm. range (bar)	Pressure increase (bar/turn)
KP000018	**KPLN-080-DPNA-HN-G34-N350**	P,T : **G 3/4"**	**350**	**100-350**	**42**
KP000070	**KPLN-080-DPNA-HN-G34-N200**	P,T : **G 3/4"**	**200**	**60-210**	**24**
KP000069	**KPLN-080-DPNA-HN-G34-N100**	P,T : **G 3/4"**	**100**	**25-100**	**13**
KP000098	**KPLN-080-DPNA-HN-G34-N050**	P,T : **G 3/4"**	**50**	**5-50**	**9**
KP000016	**KPLN-080-DPNA-HN-G12-N350**	P,T : **G 1/2"**	**350**	**100-350**	**42**
KP000090	**KPLN-080-DPNA-HN-G12-N200**	P,T : **G 1/2"**	**200**	**60-210**	**24**
KP000091	**KPLN-080-DPNA-HN-G12-N100**	P,T : **G 1/2"**	**100**	**25-100**	**13**
KP000099	**KPLN-080-DPNA-HN-G12-N050**	P,T : **G 1/2"**	**50**	**5-50**	**9**

RELIEF VALVE

CPLN-120-DPNA

DIRECT ACTING POPPET TYPE

ATLANTIC Fluid Tech

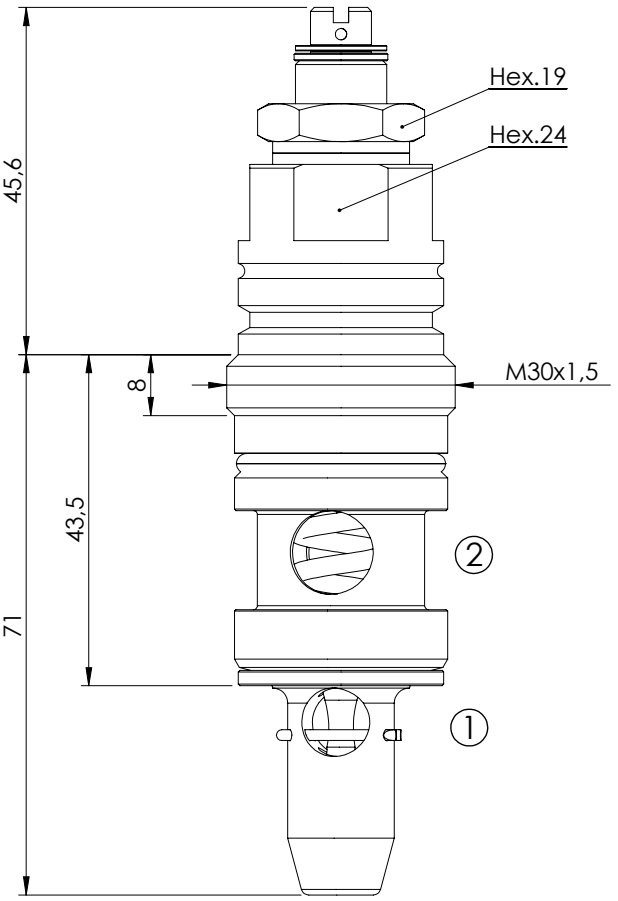

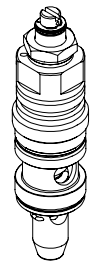

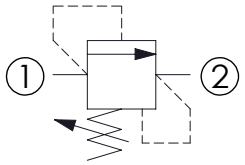

SPECIFICATIONS

Max. operating pressure in line 2: 70 bar	
Max. operating pressure in line 1:350 bar	
Rated flow:	120 l/min
Cavity:	VP000388
Weight:	0,250 kg

NOTES

Installation torque:	110-120 Nm
Seal kit:	RC100388

For lower pressure-range

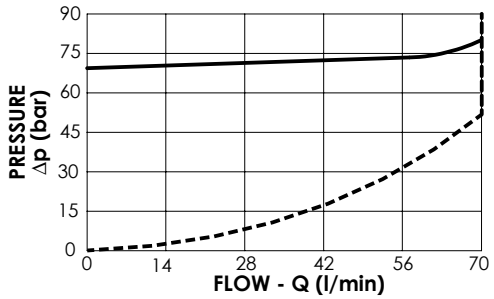

For highter pressure-range

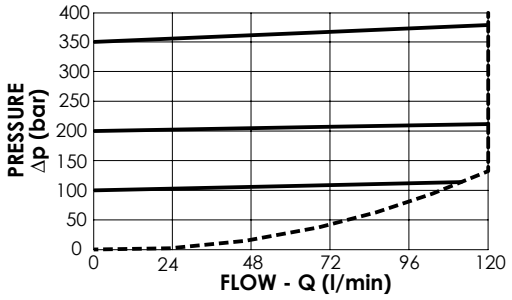

Max permissible flow

ORDERING CODES

Quick code	Description	Adjustment range (bar)	
CP000276	CPLN-120-DPNA-HN-388-N70	7 - 67	
CP000434	CPLN-120-DPNA-HN-388-N100	40 - 100	
CP000462	CPLN-120-DPNA-HN-388-N200	40 - 200	
CP000463	CPLN-120-DPNA-HN-388-N350	50 - 350	

RELIEF VALVE

CPLT-030-DPNA

DIRECT ACTING STABILIZED PISTON COMPENSATED

ATLANTIC Fluid Tech

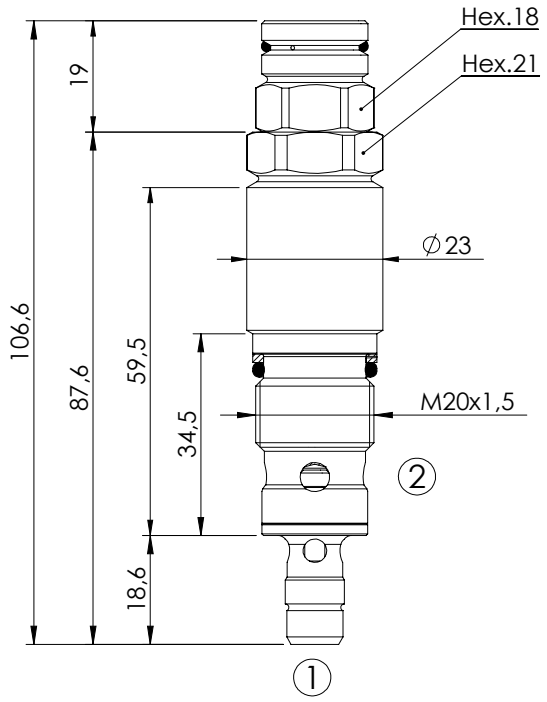

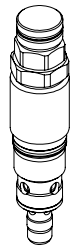

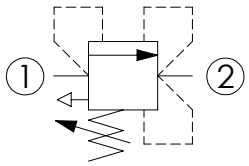

SPECIFICATIONS

Max. operating pressure:	**420 bar**
Rated flow:	**30 l/min**
Cavity:	**VP000008**
Weight:	**0,2 kg**

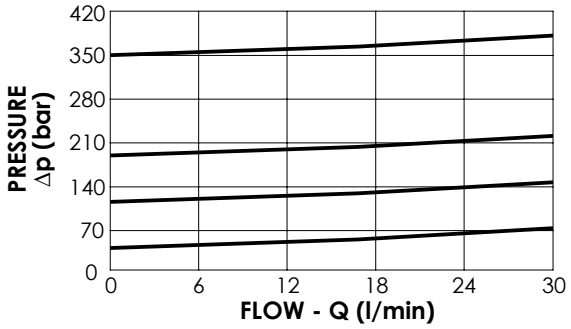

NOTES

Installation torque:	**45-50 Nm**
Seal kit:	**RC700008**

ORDERING CODES

Quick code	Description	Standard setting (bar, Q=5 l/min)	Adjustment range (bar)	Pressure increase (bar/turn)
CP000125	**CPLT-030-DPNA-HN-008-N420**	**350**	**250-420**	**104**
CP000078	**CPLT-030-DPNA-HN-008-N350**	**350**	**100-350**	**91**
CP000079	**CPLT-030-DPNA-HN-008-N200**	**200**	**50-210**	**42**
CP000080	**CPLT-030-DPNA-HN-008-N100**	**100**	**30-100**	**20**
CP000081	**CPLT-030-DPNA-HN-008-N050**	**50**	**10-50**	**10**

RELIEF VALVE

CPLT-030-DHNA

DIRECT ACTING COMPENSATED
STABILIZED PISTON
HARDENED SEAT

ATLANTIC Fluid Tech

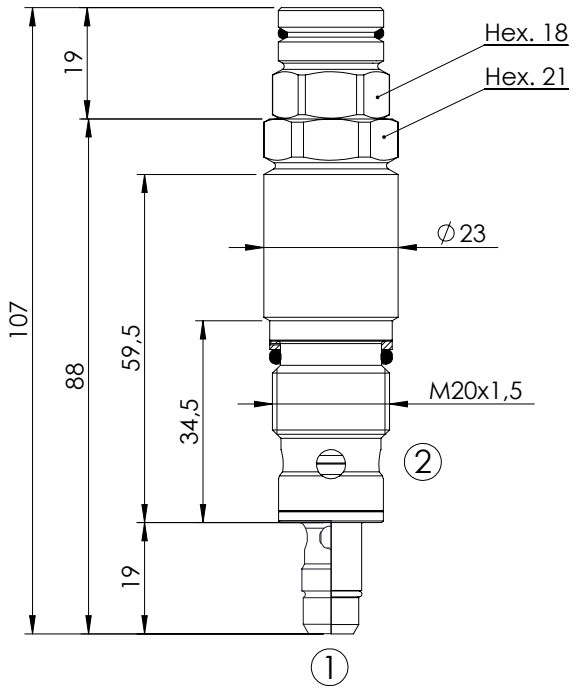

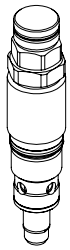

With Filter	Without Filter
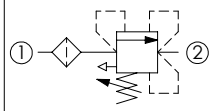	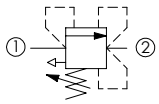

SPECIFICATIONS

Max. operating pressure:	420 bar
Max. operating pressure on T:	350 bar
Rated flow:	30 l/min
Cavity:	VP000008
Weight:	0,2 kg

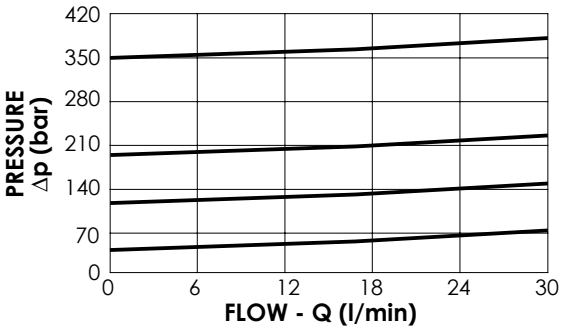

NOTES

Installation torque:	45-50 Nm
Seal kit:	RC700008
Filtration:	300 micron

ORDERING CODES

Quick code	Description	Standard setting (bar, Q=5 l/min)	Adjustment range (bar)	Pressure increase (bar/turn)	Options
CP000410	CPLT-030-DHNA-HF-008-N420	350	250-420	104	With Filter
CP000095	CPLT-030-DHNA-HN-008-N350	350	100-350	91	Without Filter
CP000096	CPLT-030-DHNA-HN-008-N200	200	50-210	42	Without Filter
CP000097	CPLT-030-DHNA-HN-008-N100	100	30-100	20	Without Filter
CP000098	CPLT-030-DHNA-HN-008-N050	50	10-50	10	Without Filter

RELIEF VALVE

CPLT-080-DHNA

DIRECT ACTING STABILIZED PISTON COMPENSATED

ATLANTIC Fluid Tech

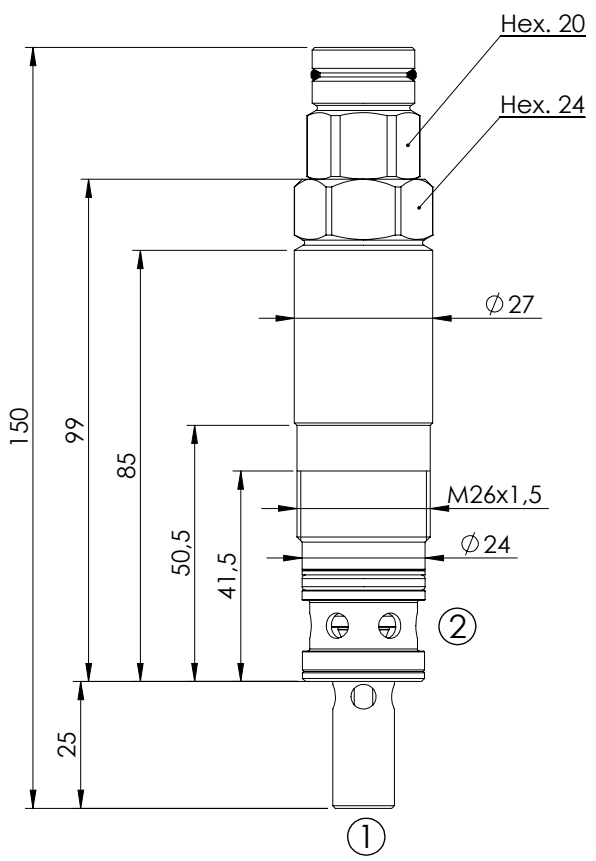

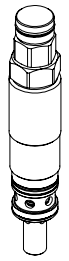

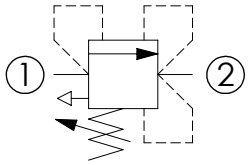

SPECIFICATIONS

Max. operating pressure:	**420 bar**
Rated flow:	**80 l/min**
Cavity:	**VP000086**
Weight:	**0,41 kg**

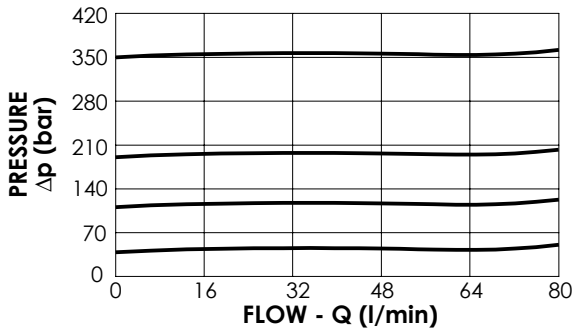

NOTES

Installation torque:	**80 - 95 Nm**
Seal kit:	**RC700086**

ORDERING CODES

Quick code	Description	Standard setting (bar, Q=5 l/min)	Adjustment range (bar)	Pressure increase (bar/turn)
CP000181	**CPLT-080-DHNA-HN-086-N420**	**350**	**150-420**	**53**
CP000130	**CPLT-080-DHNA-HN-086-N350**	**350**	**100-350**	**42**
CP000142	**CPLT-080-DHNA-HN-086-N200**	**200**	**60-210**	**24**
CP000143	**CPLT-080-DHNA-HN-086-N100**	**100**	**25-100**	**13**
CP000144	**CPLT-080-DHNA-HN-086-N050**	**50**	**5-50**	**9**

RELIEF VALVE

CPLT-080-DHNA

DIRECT ACTING STABILIZED PISTON CHAMBER VENTED

ATLANTIC Fluid Tech

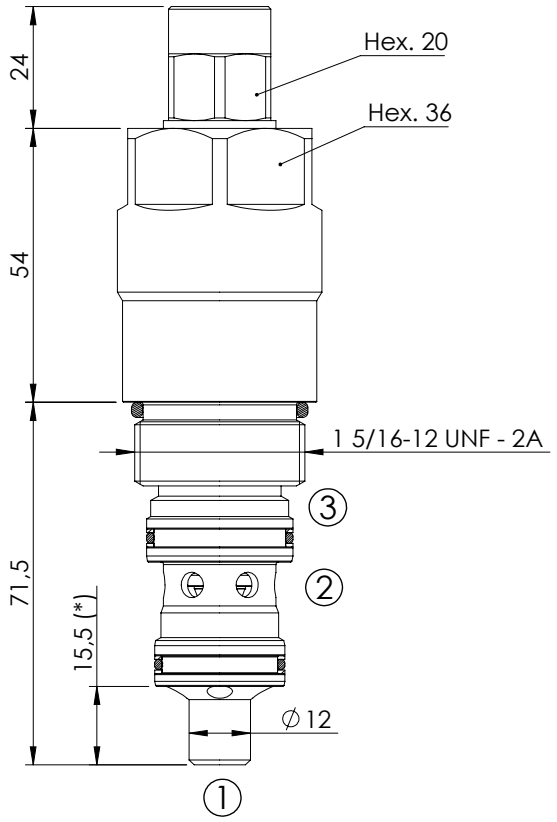

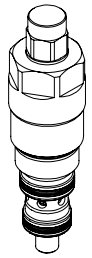

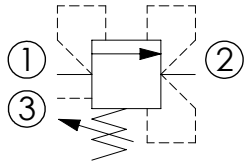

SPECIFICATIONS

Max. operating pressure:	**420 bar**
Rated flow:	**80 l/min**
Cavity:	**SAE-16-3C**
Weight:	**0,75 kg**

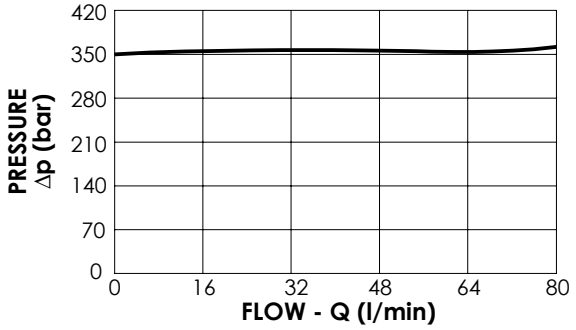

NOTES

Installation torque:	**118 - 132 Nm**
Seal kit:	**RB700089**

(*): The cartridge exceed overall dimension of the standard cavity into port 1.

ORDERING CODES

Quick code	Description	Standard setting (bar, Q=5 l/min)	Adjustment range (bar)	Pressure increase (bar/turn)
CP000171	**CPLT-080-DHNA-HN-S16-N420**	**350**	**150-420**	**53**

RELIEF VALVE

CPLN-040-DHGD

DIFFERENTIAL AREA POPPET TYPE

ATLANTIC Fluid Tech

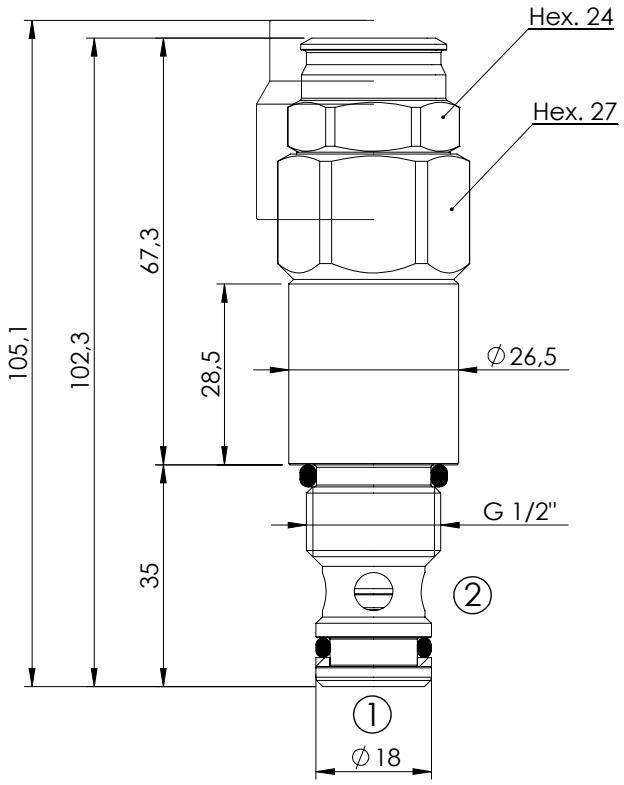

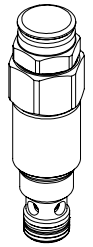

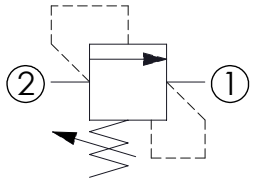

SPECIFICATIONS

Max. operating pressure:	350 bar
Rated flow:	40 l/min
Cavity:	VP000080
Weight:	0,31 kg

SEALING CAP

Ordering code:

PT000258

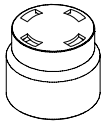

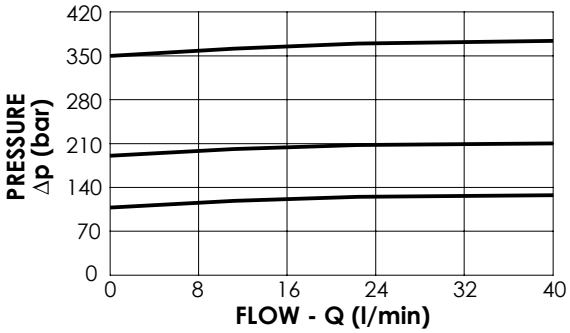

NOTES

Installation torque:	95 - 105 Nm
Seal kit:	RC900080

ORDERING CODES

Quick code	Description	Standard setting (bar, Q=5 l/min)	Adjustment range (bar)	Pressure increase (bar/turn)
CP000036	CPLN-040-DHGD-HN-080-N350	350	100-350	119
CP000088	CPLN-040-DHGD-HN-080-N200	200	50-210	63
CP000223	CPLN-040-DHGD-HN-080-N100	100	30-100	30

RELIEF VALVE

CPLN-090-DHGA

DIRECT ACTING STABILIZED PISTON

ATLANTIC Fluid Tech

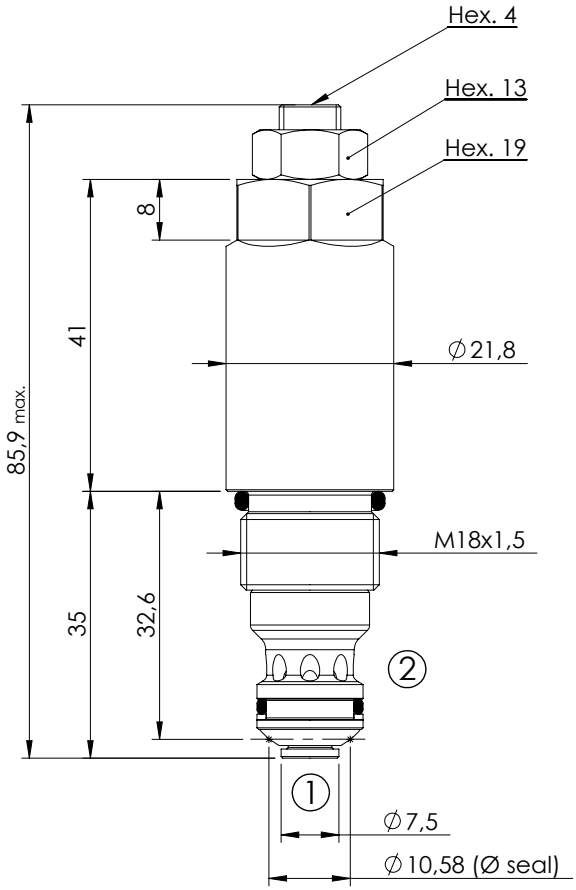

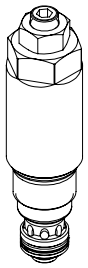

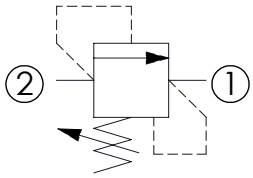

SPECIFICATIONS

Max. operating pressure:	**380 bar**
Rated flow:	**90 l/min**
Cavity:	**VP000249**
Weight:	**0,15 kg**

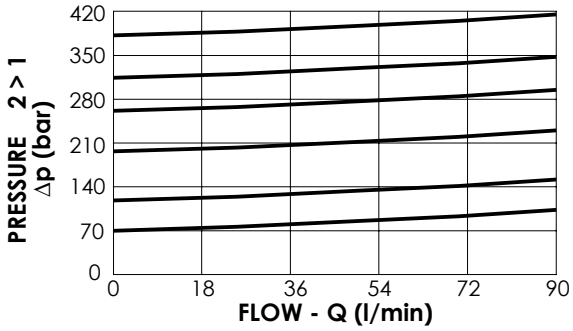

NOTES

Installation torque:	**45 - 50 Nm**
Seal kit:	**RC900249**

ORDERING CODES

Quick code	Description	Standard setting (bar, Q=5 l/min)	Adjustment range (bar)	Pressure increase (bar/turn)
CP000105	**CPLN-090-DHGA-HN-249-N380**	**380**	**320 - 380**	**101**
CP000101	**CPLN-090-DHGA-HN-249-N320**	**320**	**270 - 320**	**67**
CP000104	**CPLN-090-DHGA-HN-249-N270**	**270**	**200 - 270**	**44**
CP000103	**CPLN-090-DHGA-HN-249-N200**	**200**	**120 - 200**	**30**
CP000102	**CPLN-090-DHGA-HN-249-N120**	**120**	**70 -120**	**18**
CP000120	**CPLN-090-DHGA-HN-249-N070**	**70**	**10 - 70**	**8**

RELIEF VALVE WITH REVERSE FREE FLOW

CPAN-090-DHGA

DIRECT ACTING STABILIZED PISTON

ATLANTIC Fluid Tech

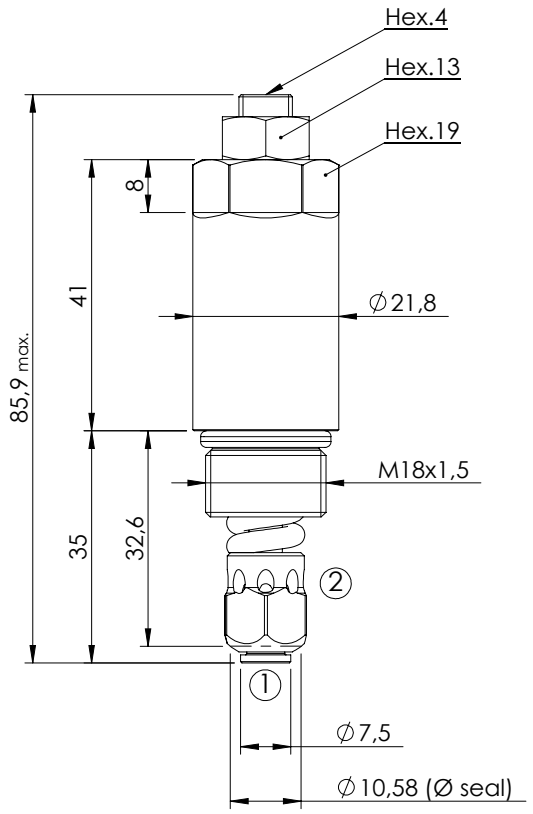

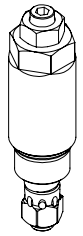

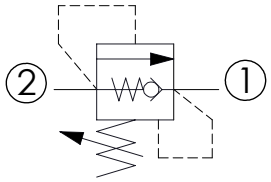

SPECIFICATIONS

Max. operating pressure:	**380 bar**
Rated flow:	**90 l/min**
Cavity:	**VP000249**
Weight:	**0,15 kg**

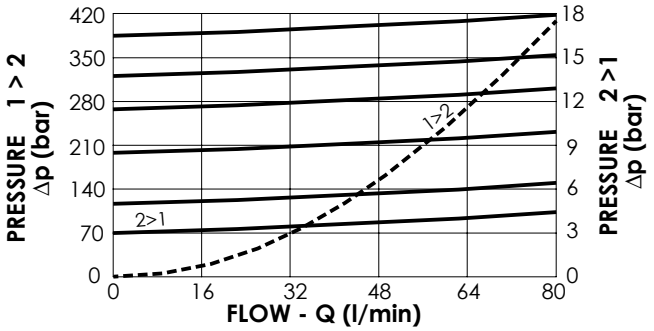

NOTES

Installation torque:	**40 - 45 Nm**
Seal kit:	**RC900249**

ORDERING CODES

Quick code	Description	Standard setting (bar, Q=5 l/min)	Adjustment range (bar)	Pressure increase (bar/turn)
CP000114	**CPAN-090-DHGA-HN-249-N380**	**380**	**320 - 380**	**101**
CP000113	**CPAN-090-DHGA-HN-249-N320**	**320**	**270 - 320**	**67**
CP000109	**CPAN-090-DHGA-HN-249-N270**	**270**	**200 - 270**	**44**
CP000112	**CPAN-090-DHGA-HN-249-N200**	**200**	**120 - 200**	**30**
CP000111	**CPAN-090-DHGA-HN-249-N120**	**120**	**70 -120**	**18**
CP000122	**CPAN-090-DHGA-HN-249-N070**	**70**	**10 - 70**	**8**

RELIEF VALVE

CPLN-150-DHGD

DIFFERENTIAL AREA POPPET TYPE

ATLANTIC Fluid Tech

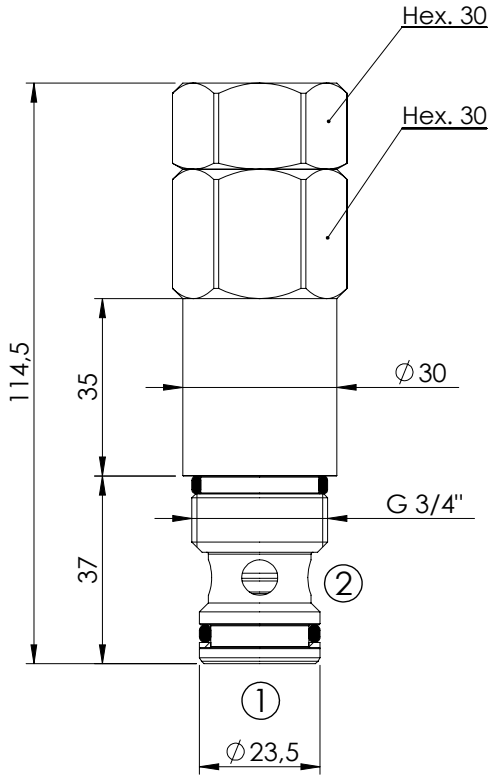

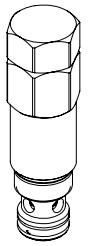

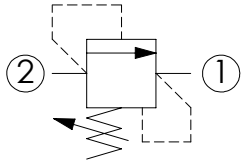

SPECIFICATIONS

Max. operating pressure:	**350 bar**
Rated flow:	**150 l/min**
Cavity:	**VP000070**
Weight:	**0,48 kg**

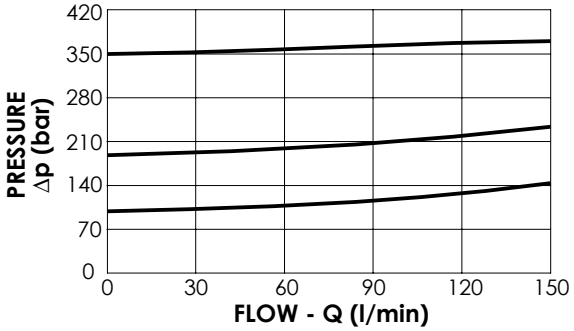

NOTES

Installation torque:	**110 - 130 Nm**
Seal kit:	**RC700070**

ORDERING CODES

Quick code	Description	Standard setting (bar, Q=5 l/min)	Adjustment range (bar)	Pressure increase (bar/turn)
CP000022	**CPLN-150-DHGD-HN-070-N350**	**350**	**130-350**	**111**
CP000018	**CPLN-150-DHGD-HN-070-N200**	**200**	**70-210**	**73**
CP000021	**CPLN-150-DHGD-HN-070-N100**	**100**	**30-100**	**32**

RELIEF VALVE IN BODY

KPLN-150-DHGD

DIFFERENTIAL AREA POPPET TYPE

ATLANTIC Fluid Tech

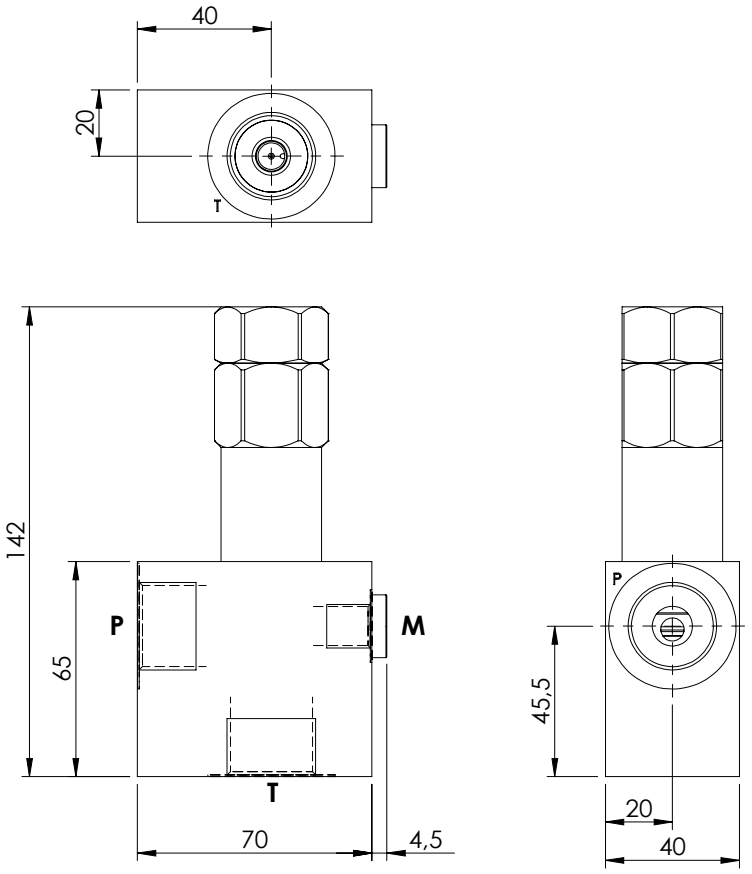

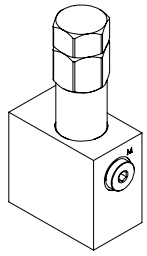

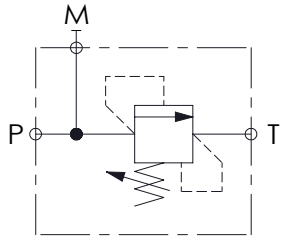

SPECIFICATIONS

Max. operating pressure:	**350 bar**
Rated flow:	**150 l/min**
Manifold:	**Aluminium**
Weight:	**0,85 kg**

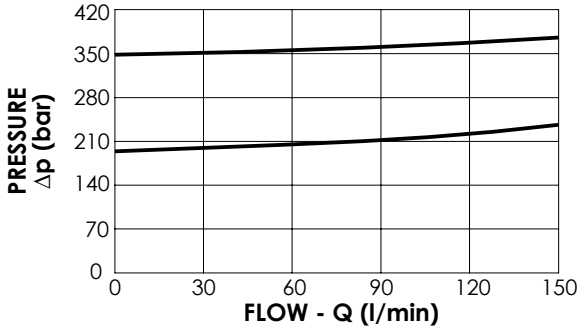

ORDERING CODES

Quick code	Description	Main ports size	Standard setting (bar, Q=5 l/min)	Adjustm. range (bar)	Pressure increase (bar/turn)
KP000028	**KPLN-150-DHGD-HN-G34-N350**	P,T : **G 3/4"** M : **G 1/4"**	**350**	**130-350**	**111**
KP000057	**KPLN-150-DHGD-HN-G34-N200**	P,T : **G 3/4"** M : **G 1/4"**	**200**	**70-210**	**73**
KP000020	**KPLN-150-DHGD-HN-G12-N350**	P,T : **G 1/2"** M : **G 1/4"**	**350**	**130-350**	**111**
KP000058	**KPLN-150-DHGD-HN-G12-N200**	P,T : **G 1/2"** M : **G 1/4"**	**200**	**70-210**	**73**

RELIEF VALVE

CPLN-160-DHGA

DIRECT ACTING STABILIZED PISTON

ATLANTIC Fluid Tech

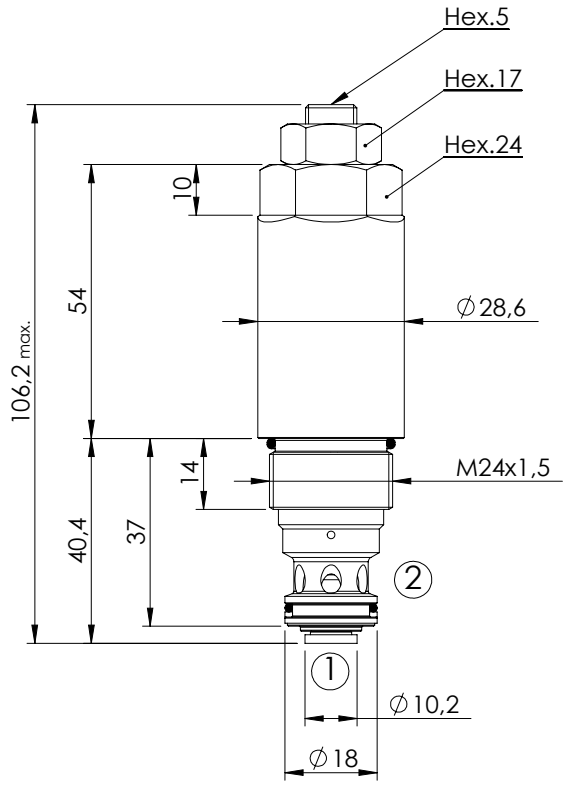

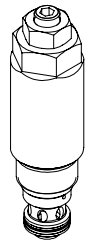

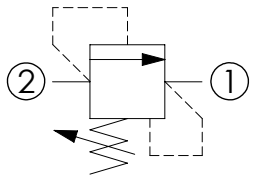

SPECIFICATIONS

Max. operating pressure:	**400 bar**
Rated flow:	**160 l/min**
Cavity:	**VP000250**
Weight:	**0,33 kg**

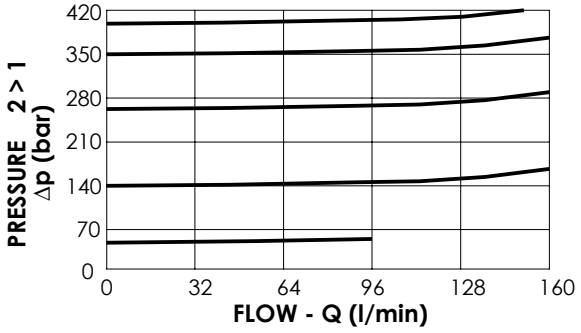

NOTES

Installation torque:	**45 - 50 Nm**
Seal kit:	**RC900250**

ORDERING CODES

Quick code	Description	Standard setting (bar, Q=5 l/min)	Adjustment range (bar)	Pressure increase (bar/turn)
CP000108	**CPLN-160-DHGA-HN-250-N400**	**400**	**350 - 400**	**72**
CP000107	**CPLN-160-DHGA-HN-250-N350**	**350**	**270 - 350**	**58**
CP000100	**CPLN-160-DHGA-HN-250-N270**	**270**	**140 - 270**	**49**
CP000106	**CPLN-160-DHGA-HN-250-N140**	**140**	**90 -140**	**36**
CP000121	**CPLN-160-DHGA-HN-250-N090**	**90**	**50 - 90**	**13**

RELIEF VALVE WITH REVERSE FREE FLOW

CPAN-160-DHGA

DIRECT ACTING STABILIZED PISTON

ATLANTIC Fluid Tech

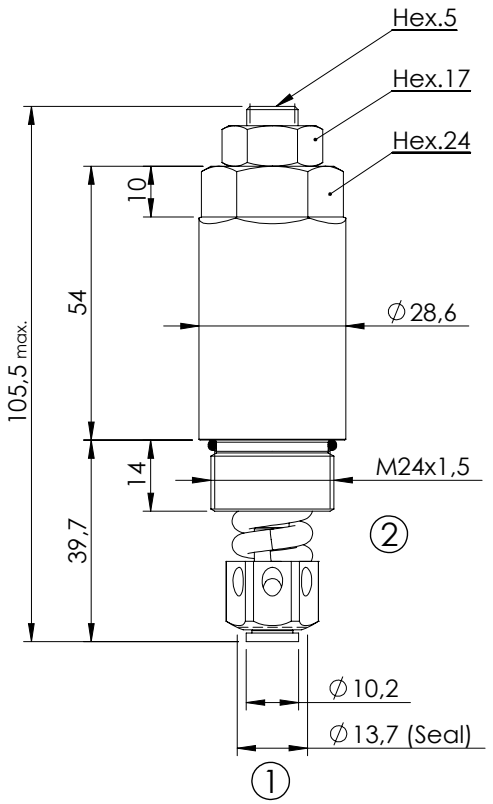

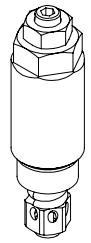

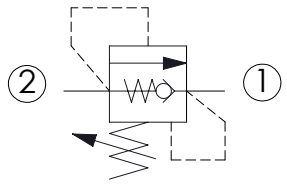

SPECIFICATIONS

Max. operating pressure:	**400 bar**
Rated flow:	**160 l/min**
Cavity:	**VP000250**
Weight:	**0,32 kg**

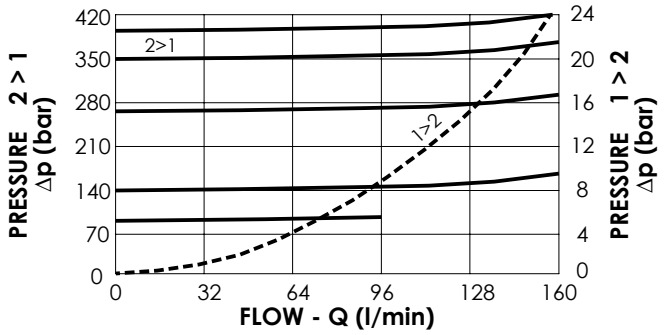

NOTES

Installation torque:	**45 - 50 Nm**
Seal kit:	**RC900250**

ORDERING CODES

Quick code	Description	Standard setting (bar, Q=5 l/min)	Adjustment range (bar)	Pressure increase (bar/turn)
CP000117	**CPAN-160-DHGA-HN-250-N400**	**400**	**350 - 400**	**72**
CP000116	**CPAN-160-DHGA-HN-250-N350**	**350**	**270 - 350**	**58**
CP000110	**CPAN-160-DHGA-HN-250-N270**	**270**	**140 - 270**	**49**
CP000115	**CPAN-160-DHGA-HN-250-N140**	**140**	**90 - 140**	**36**
CP000123	**CPAN-160-DHGA-HN-250-N090**	**90**	**50 - 90**	**13**

RELIEF VALVE

CPLN-250-DHGD

DIFFERENTIAL AREA POPPET TYPE

ATLANTIC Fluid Tech

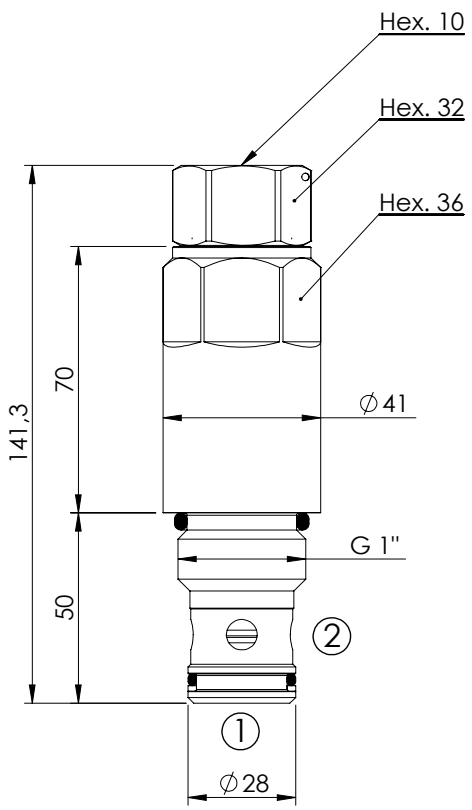

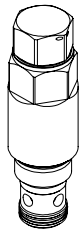

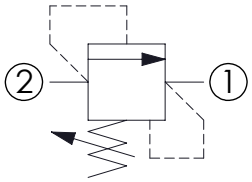

SPECIFICATIONS

Max. operating pressure:	350 bar
Rated flow:	250 l/min
Cavity:	VP000154
Weight:	0,9 kg

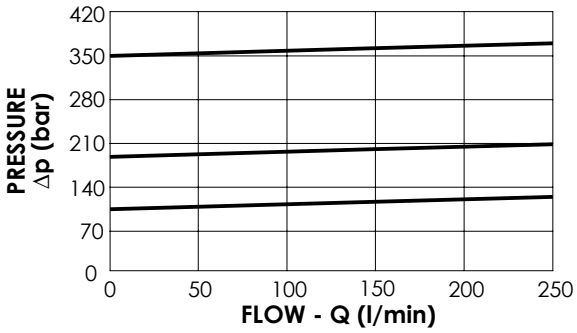

NOTES

Installation torque:	230 - 250 Nm
Seal kit:	RC900154

ORDERING CODES

Quick code	Description	Standard setting (bar, Q=5 l/min)	Adjustment range (bar)	Pressure increase (bar/turn)
CP000046	CPLN-250-DHGD-HN-154-N350	350	120-350	65
CP000119	CPLN-250-DHGD-HN-154-N200	200	50-200	38
CP000224	CPLN-250-DHGD-HN-154-N100	100	20-100	19

RELIEF VALVE

KPLN-250-DHGD

DIFFERENTIAL AREA POPPET TYPE

ATLANTIC Fluid Tech

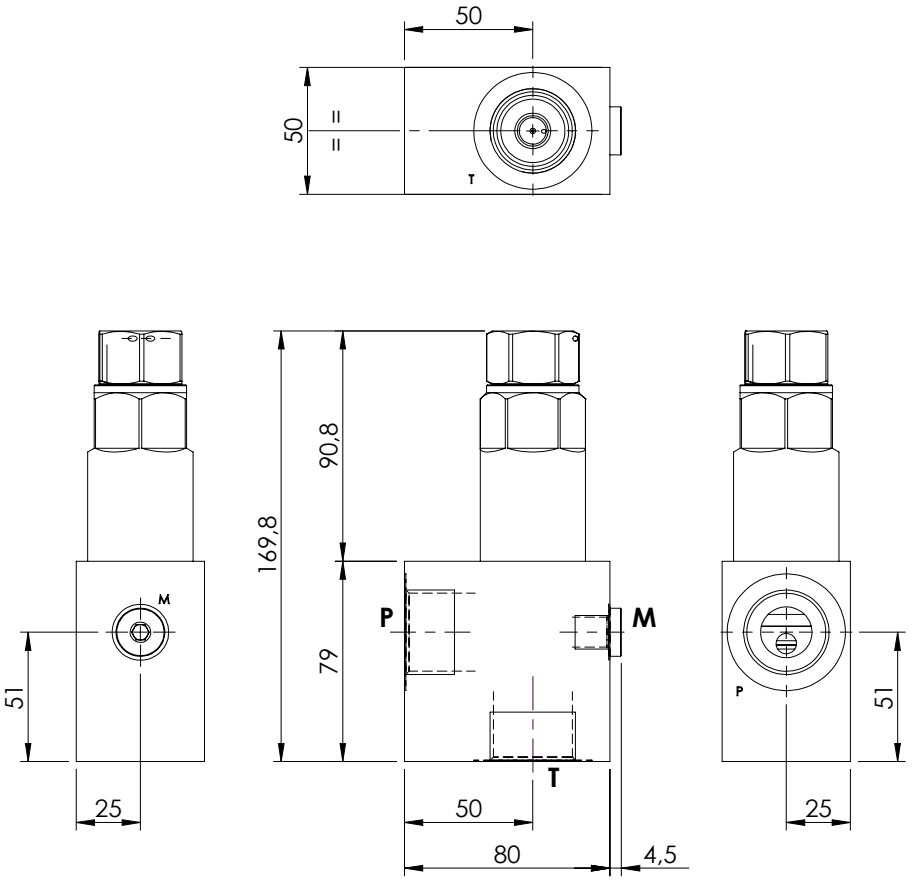

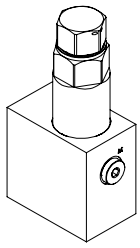

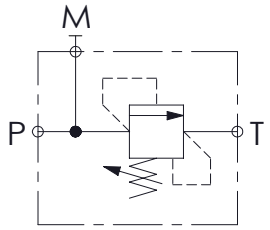

SPECIFICATIONS

Max. operating pressure:	**350 bar**
Rated flow:	**250 l/min**
Manifold:	**Steel**
Weight:	**2,73 kg**

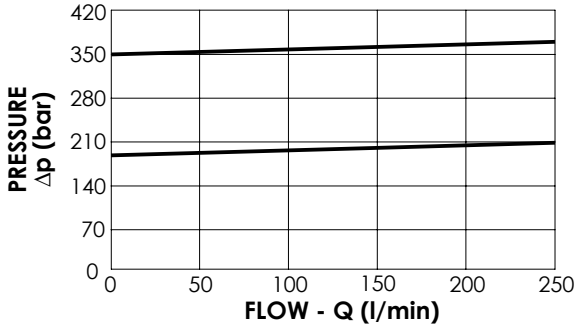

ORDERING CODES

Quick code	Description	Main ports size	Standard setting (bar, Q=5 l/min)	Adjustm. range (bar)	Pressure increase (bar/turn)
KP000068	**KPLN-250-DHGD-HN-G10-N350**	P,T : **G 1"** ; M : **G 1/4"**	**350**	**120-350**	**65**
KP000103	**KPLN-250-DHGD-HN-G10-N200**	P,T : **G 1"** ; M : **G 1/4"**	**200**	**50-200**	**38**

RELIEF VALVE

CPLN-120-PSNA

PILOT OPERATED SPOOL TYPE

ATLANTIC Fluid Tech

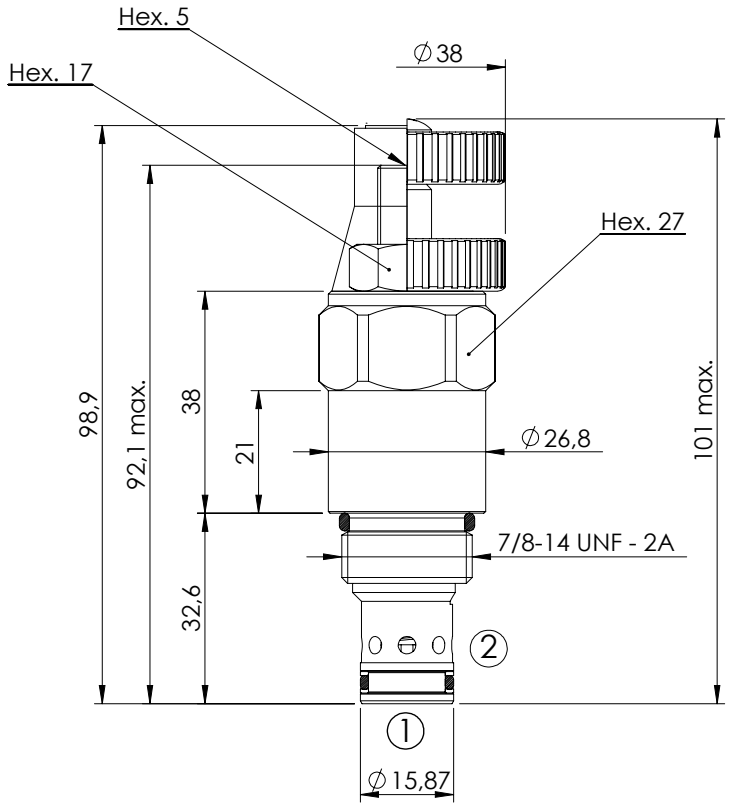

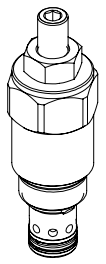

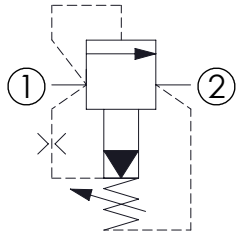

SPECIFICATIONS

Max. operating pressure:	350 bar
Rated flow:	120 l/min
Cavity:	SAE-10-2N
Weight:	0,24 kg
Installation torque:	55 - 62 Nm
Leakage:	200 cm^3 @ 200 bar
Seal kit:	RB700082

SEALING CAP

Ordering code:
AT000022

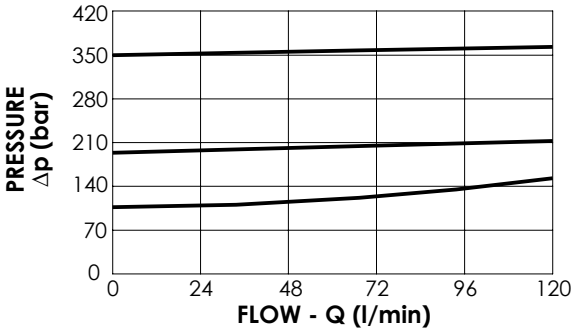

OPTIONS

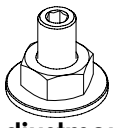

Adjustment with Screw

Adjustment with Handknob

ORDERING CODES

Quick code	Description	Standard setting (bar, Q=5 l/min)	Adjust. range (bar)	Pressure increase (bar/turn)	Option
CP000009	CPLN-120-PSNA-HN-S10-N350	350	140-350	114	Adjustment with Screw
CP000060	CPLN-120-PSNA-HN-S10-N200	200	70-210	69	Adjustment with Screw
CP000059	CPLN-120-PSNA-HN-S10-N100	100	35-120	37	Adjustment with Screw
CP000064	CPLN-120-PSNA-VN-S10-N350	350	140-350	114	Adjustment with Handknob
CP000065	CPLN-120-PSNA-VN-S10-N200	200	70-210	69	Adjustment with Handknob
CP000066	CPLN-120-PSNA-VN-S10-N100	100	35-120	37	Adjustment with Handknob

RELIEF VALVE IN BODY

KPLN-120-PSNA

PILOT OPERATED SPOOL TYPE

ATLANTIC Fluid Tech

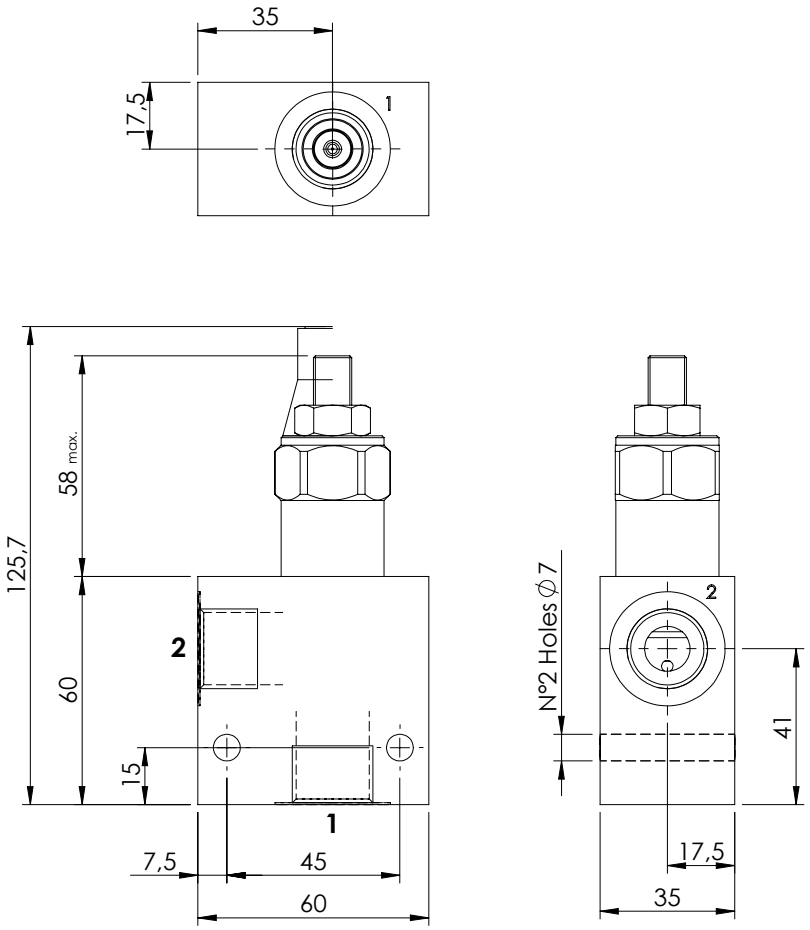

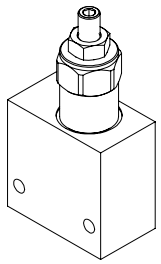

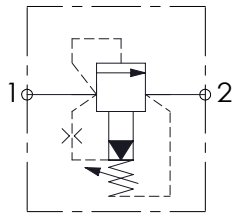

SPECIFICATIONS

Max. operating pressure:	350 bar
Rated flow:	120 l/min
Manifold:	Aluminium
Weight:	0,49 kg
Leakage:	200 cm^3 @ 200 bar

SEALING CAP

Ordering code:

AT000022

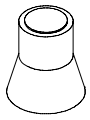

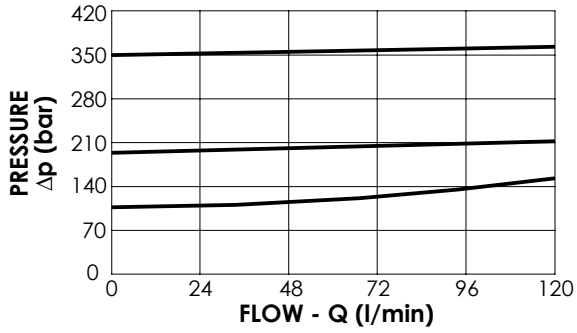

ORDERING CODES

Quick code	Description	Main ports size	Standard setting (bar, Q=5 l/min)	Adjustm. range (bar)	Pressure increase (bar/turn)
KP000014	**KPLN-120-PSNA-HN-G12-N350**	P,T : **G1/2"**	**350**	**140-350**	**114**
KP000048	**KPLN-120-PSNA-HN-G12-N200**	P,T : **G1/2"**	**200**	**70-210**	**69**
KP000047	**KPLN-120-PSNA-HN-G12-N100**	P,T : **G1/2"**	**100**	**35-120**	**37**
KP000096	**KPLN-120-PSNA-HN-G34-N350**	P,T : **G3/4"**	**350**	**140-350**	**114**
KP000159	**KPLN-120-PSNA-HN-G34-N200**	P,T : **G3/4"**	**200**	**70-210**	**69**
KP000160	**KPLN-120-PSNA-HN-G34-N100**	P,T : **G3/4"**	**100**	**35-120**	**37**

RELIEF VALVE

CPLN-300-PSNA

PILOT OPERATED SPOOL TYPE

ATLANTIC Fluid Tech

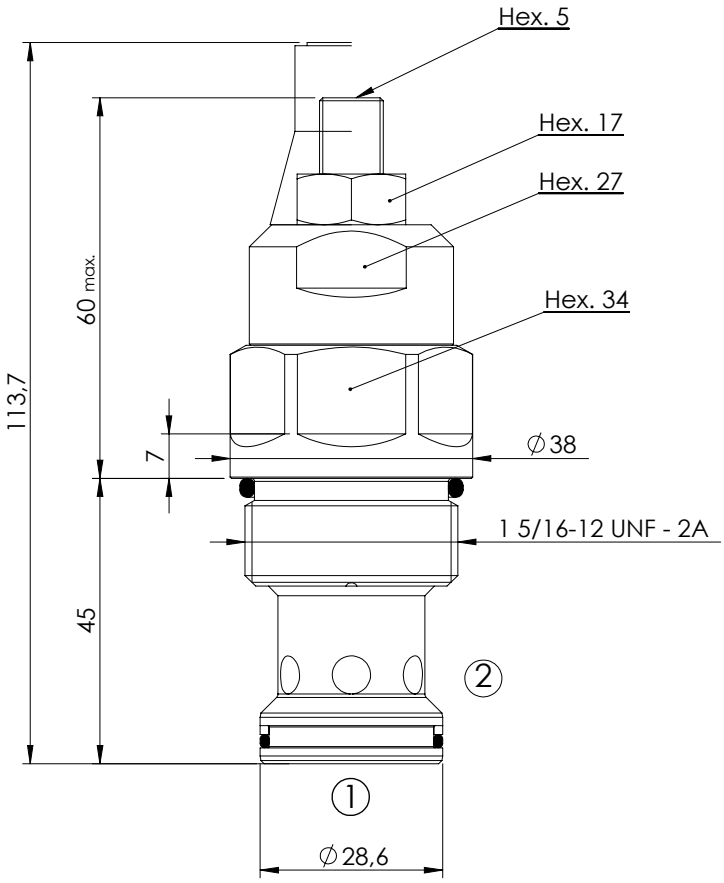

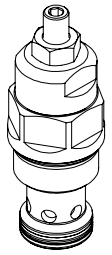

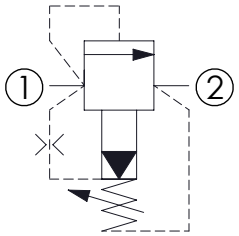

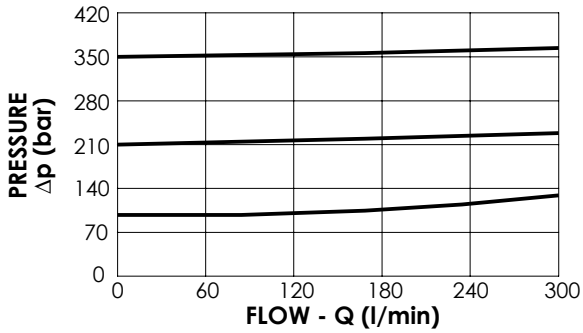

SPECIFICATIONS

Max. operating pressure:	350 bar
Rated flow:	300 l/min
Cavity:	SAE-16-2N
Weight:	0,5 kg
Leakage:	350 cm³ @ 200 bar

SEALING CAP

Ordering code:
AT000022

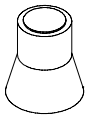

NOTES

Installation torque:	150 - 180 Nm
Seal kit:	RA700084

ORDERING CODES

Quick code	Description	Standard setting (bar, Q=5 l/min)	Adjustment range (bar)	Pressure increase (bar/turn)
CP000188	CPLN-300-PSNA-HN-S16-N350	350	140-350	114
CP000177	CPLN-300-PSNA-HN-S16-N200	200	70-210	69
CP000178	CPLN-300-PSNA-HN-S16-N100	100	35-120	37

RELIEF VALVE

CPLN-500-PHNA

PILOTED OPERATED SPOOL TYPE

ATLANTIC Fluid Tech

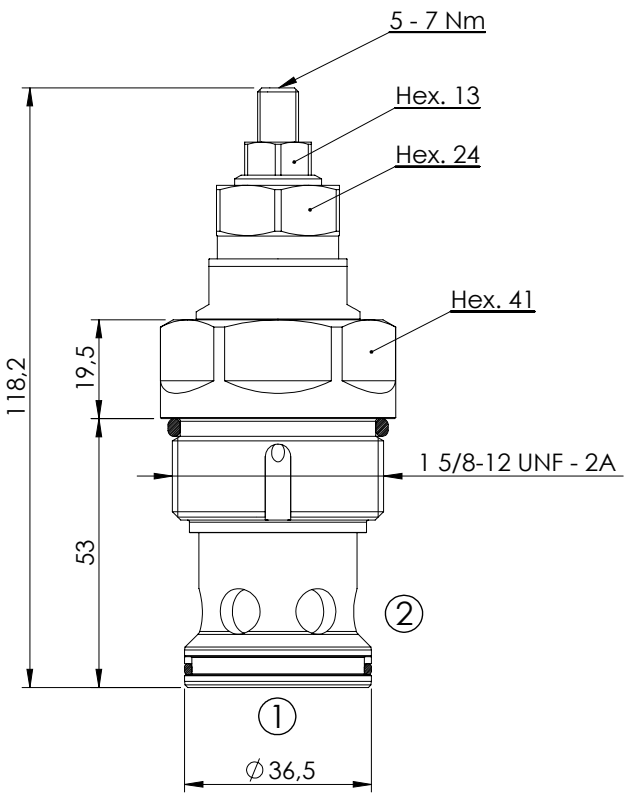

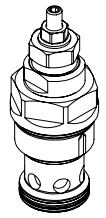

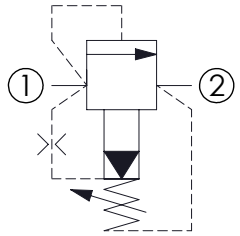

SPECIFICATIONS

Max. operating pressure:	350 bar
Rated flow:	500 l/min
Cavity:	SAE-20-2N
Weight:	0,7 kg
Installation torque:	230 - 250 Nm
Max. int. leakage:	400 cm^3/min (@46 cSt)
Seal kit:	RA900085

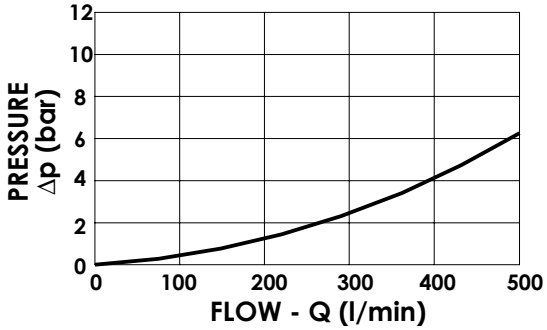

SEALING CAP

Ordering code:

AT000020

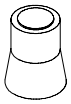

ORDERING CODES

Quick code	Description	Standard setting (bar, Q=5 l/min)	Adjustment range (bar)	Pressure increase (bar/turn)
CP000407	CPLN-500-PHNA-SN-S20-N350	350	140-350	142
CP000408	CPLN-500-PHNA-SN-S20-N200	200	90-210	87
CP000409	CPLN-500-PHNA-SN-S20-N100	100	35-110	47

RELIEF VALVE

CPLT-120-PSNA

PILOT OPERATED SPOOL TYPE COMPENSATED

ATLANTIC Fluid Tech

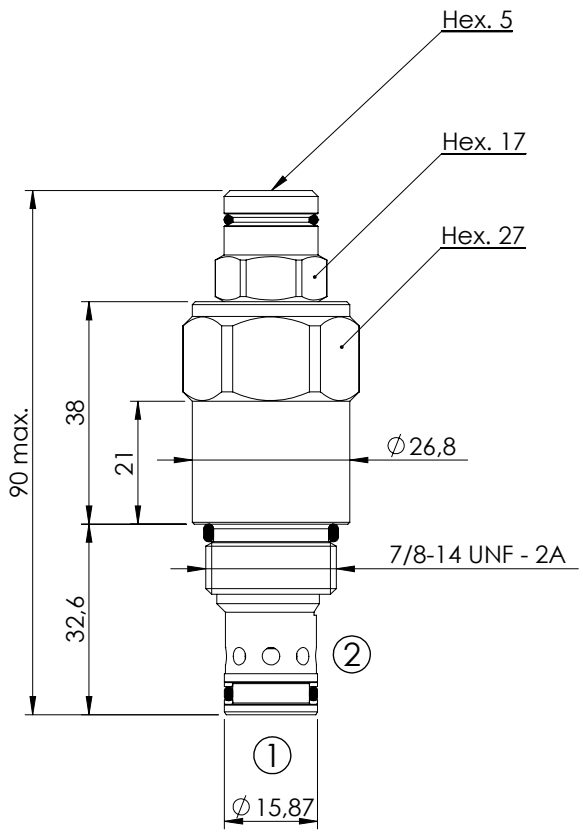

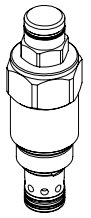

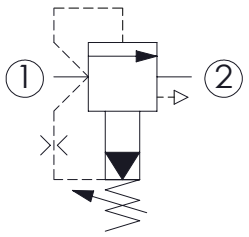

SPECIFICATIONS

Max. operating pressure:	350 bar
Rated flow:	120 l/min
Cavity:	SAE-10-2N
Weight:	0,25 kg
Leakage:	200 cm^3 @ 200 bar

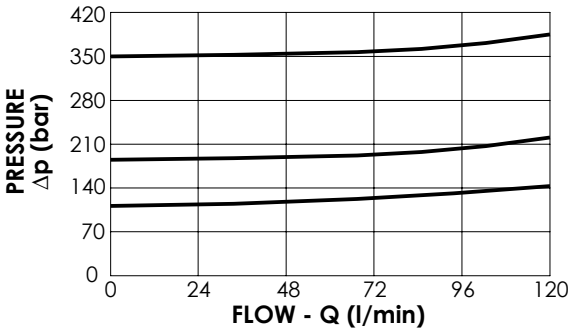

NOTES

Installation torque:	55 - 62 Nm
Seal kit:	RB700082

ORDERING CODES

Quick code	Description	Standard setting (bar, Q=5 l/min)	Adjustment range (bar)	Pressure increase (bar/turn)
CP000070	CPLT-120-PSNA-HN-S10-N350	350	140-350	114
CP000071	CPLT-120-PSNA-HN-S10-N200	200	70-210	69
CP000072	CPLT-120-PSNA-HN-S10-N100	100	35-120	37

RELIEF VALVE

CPLV-120-PSNA

PILOT OPERATED
SPOOL TYPE
SEPARATE TANK LINE

ATLANTIC Fluid Tech

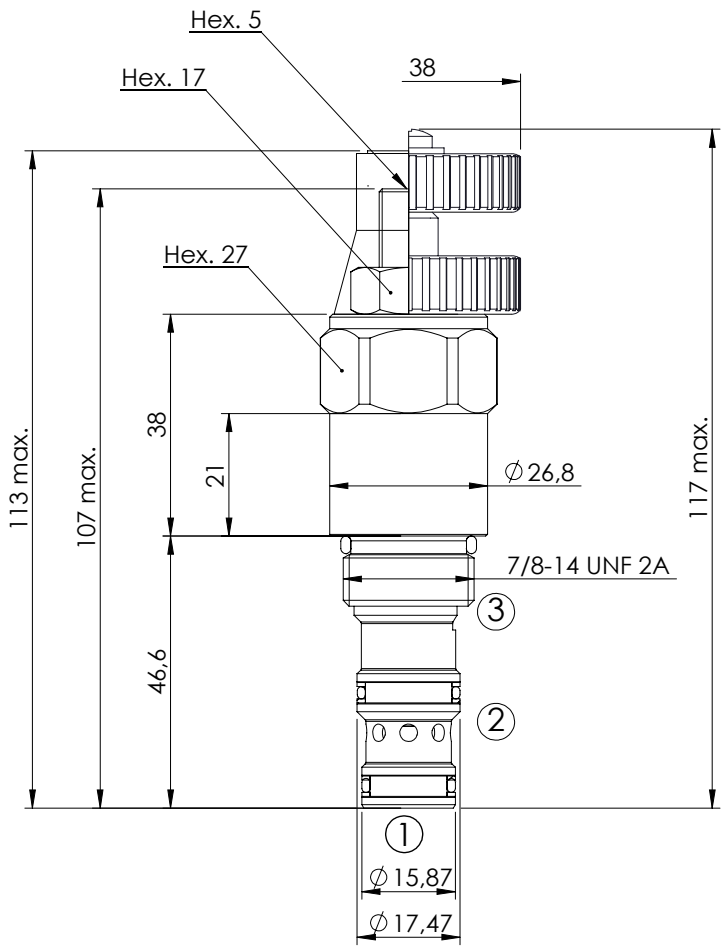

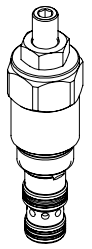

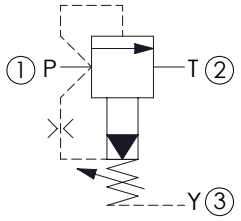

SPECIFICATIONS

Max. operating pressure:	350 bar
Rated flow:	120 l/min
Cavity:	SAE-10-3N
Weight:	0,26 kg
Installation torque:	55 - 62 Nm
Leakage:	200 cm^3 @ 200 bar (1>2)
Seal kit:	RB700092

SEALING CAP

Ordering code:
AT000022

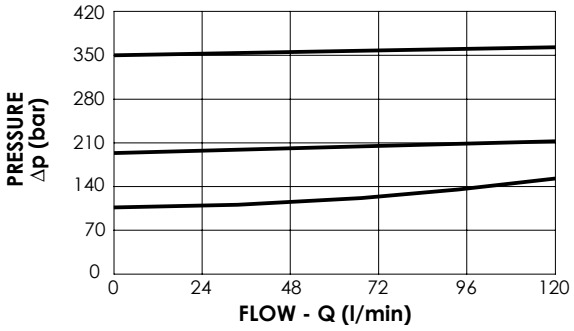

OPTIONS

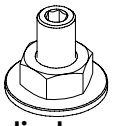

Adjustment with Screw

Adjustment with Handknob

ORDERING CODES

Quick code	Description	Standard setting (bar, Q=5 l/min)	Adjust. range (bar)	Pressure increase (bar/turn)	Option
CP000228	CPLV-120-PSNA-HN-S10-N350	350	140-350	114	Adjustment with Screw
CP000427	CPLV-120-PSNA-HN-S10-N200	200	70-210	69	Adjustment with Screw
CP000428	CPLV-120-PSNA-HN-S10-N100	100	35-120	37	Adjustment with Screw
CP000429	CPLV-120-PSNA-VN-S10-N350	350	140-350	114	Adjustment with Handknob
CP000430	CPLV-120-PSNA-VN-S10-N200	200	70-210	69	Adjustment with Handknob
CP000431	CPLV-120-PSNA-VN-S10-N100	100	35-120	37	Adjustment with Handknob

RELIEF VALVE

CPSK-001-PPNA

DIRECT ACTING
POPPET TYPE
KICK DOWN TYPE

ATLANTIC Fluid Tech

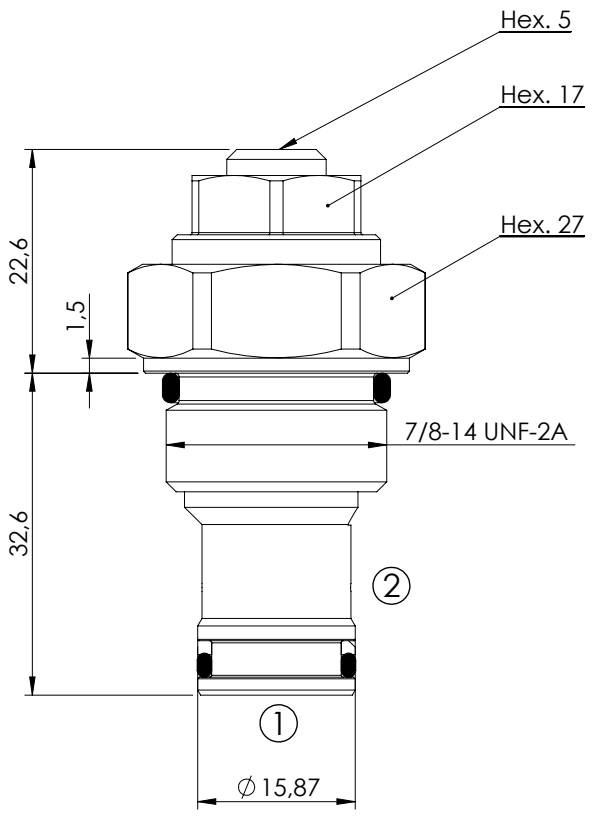

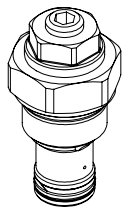

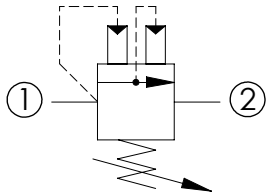

SPECIFICATIONS

Max. operating pressure:	**350 bar**
Rated flow:	**1 l/min**
Cavity:	**SAE-10-2N**
Weight:	**0,13 kg**

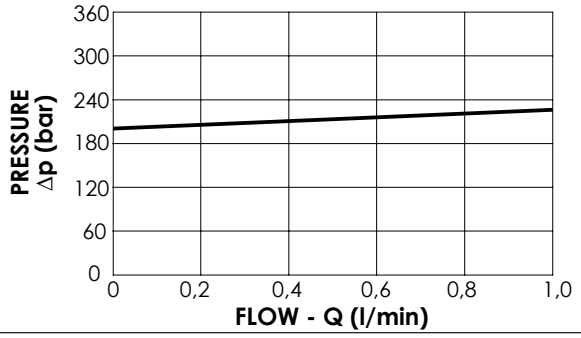

NOTES

Installation torque:	**55 - 62 Nm**
Seal kit:	**RA700082**

When the pressure exceeds the setting of the valve the poppet opens and unload the system to 10 bar. The valve closes when the flow is reduced to 0 l/min.

ORDERING CODES

Quick code	Description	Standard setting (bar, cracking press.)	Adjustment range (bar)	Pressure increase (bar/turn)
CP000227	**CPSK-001-PPNA-SN-S10-N350**	**175**	**140-350**	**70,5**

ATLANTIC
Fluid Tech

SECTION 10

Check and Metering Valves

MANAGEMENT SYSTEM CERTIFICATION
DNV·GL
ISO 9001 = ISO 14001
OHSAS 18001

CHECK AND METERING VALVES

ATLANTIC Fluid Tech

Hydraulic scheme	Valve description	Valve type	Rated flow (l/min)	Max. pressure (bar)	Installation	Main port size or cavity type	Page
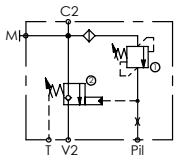	MLST-040-ALGR	Right version	40	420	In line	G 3/8"	10.01.**010**
	MLST-040-ALGL	Left version	40	420	In line	G 3/8"	10.01.**020**
	MLST-100-ALGR	Right version	100	420	In line	G 1/2"	10.01.**030**
	MLST-100-ALGL	Left version	100	420	In line	G 1/2"	10.01.**040**
	MLST-150-ALGR	Right version	150	420	In line	G 3/4"	10.01.**050**
	MLST-150-ALGL	Left version	150	420	In line	G 3/4"	10.01.**060**
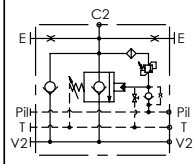	MLST-100-AAGN	Right and left version	150	420	Flanged	1/2" SAE 6000	10.02.**070**
	MLST-150-AAGN	Right and left version	150	420	Flanged	1/2" SAE 6000	10.02.**080**
	MLST-200-AAGN	Right and left version	250	420	Flanged	3/4" SAE 6000	10.02.**090**
	MLST-200-AAGN	Right and left version	250	420	Flanged	1" SAE 6000	10.02.**100**
	MLTT-300-AAGR	Right and left version	350	420	Flanged	3/4" SAE 6000	10.02.**110**
	MLST-300-AAGN	Right and left version	400	420	Flanged	1" SAE 6000	10.02.**120**
	MLST-300-AAGN	Right and left version	500	420	Flanged	1"1/4 SAE 6000	10.02.**130**
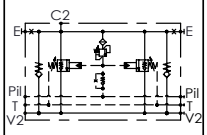	MLST-500-AAJN	Right and left version	500	420	Flanged	3/4" SAE 6000	10.03.**140**
	MLST-500-AAGN	Right and left version	500	420	Flanged	1" SAE 6000	10.03.**150**
	MLST-550-AAGN	Right and left version	500	420	Flanged	1"1/4 SAE 6000	10.03.**160**
	MLST-700-AAGN	Right and left version	700	420	Flanged	1"1/4 SAE 6000	10.03.**170**
	MLST-700-AAGN	Right and left version	700	420	Flanged	1"1/2 SAE 6000	10.03.**180**
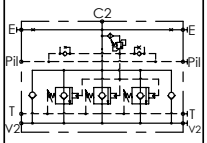	MLST-1400-AAGN	Right and left version	1400	420	Flanged	1"1/2 SAE 6000	10.04.**190**
	MLST-1400-AAGR	Right version	1400	420	Flanged	2" SAE 6000	10.04.**200**
	MLST-1400-AAGL	Left version	1400	420	Flanged	2" SAE 6000	10.04.**210**
	MLST-1500-AAGR	Right version	1500	420	Flanged	2" SAE 6000 3" SAE 6000	10.04.**220**
	MLST-1500-AAGL	Left version	1500	420	Flanged	2" SAE 6000 3" SAE 6000	10.04.**230**

CHECK AND METERING VALVE

MLST-040-ALGR

IN LINE VERSION
RIGHT VERSION

ATLANTIC Fluid Tech

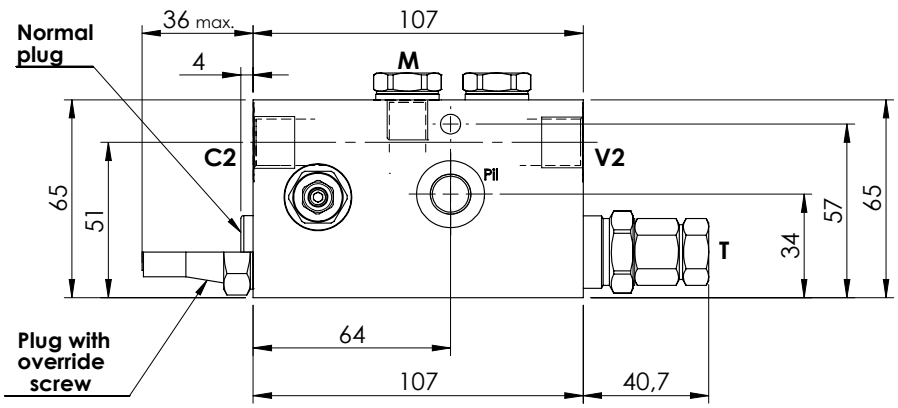

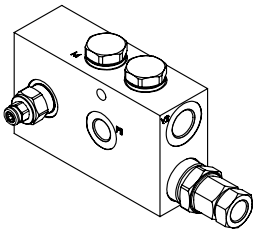

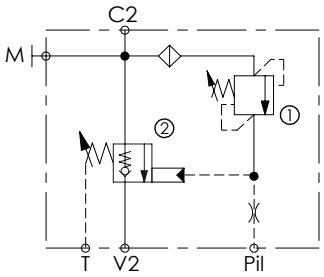

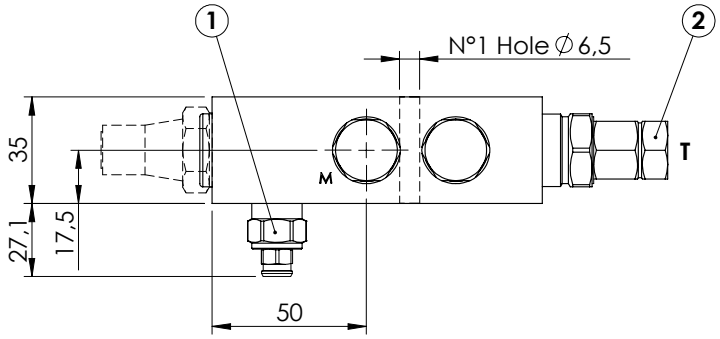

SPECIFICATIONS

Max. operating pressure:	**420 bar**
Rated flow:	**40 l/min**
Manifold:	**Steel**
Weight:	**1,86 kg**

NOTES

When correctly adjusted for the specific excavator installation, these valves meet the requirement of ISO 8643

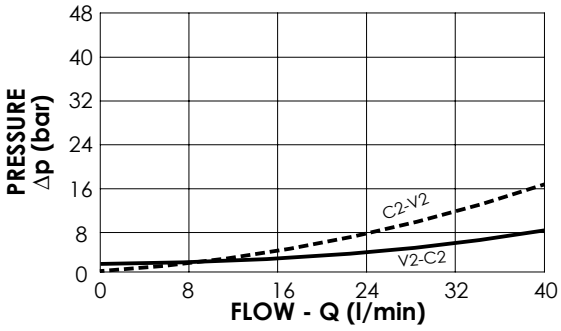

Plug with override screw

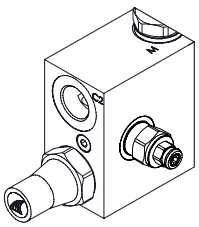

Normal plug

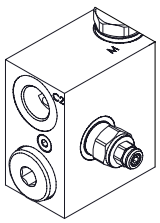

ORDERING CODES

Quick code	Description	Main ports size	Plug with override screw	Standard setting (bar)	Adjust. range (bar)	Pressure increase (bar/turn)
ML000143	**MLST-040-ALGR-00-G38-N420**	V2,C2: **G 3/8"** Pil,T,M: **G 1/4"**	**No**	① **350 Q=5 l/min** ② **7.5 Crack. pr.**	① **150-420** ② **3-15**	① **236** ② **6.7**
ML000144	**MLST-040-ALGR-00-G38-E420**	V2,C2: **G 3/8"** Pil,T,M: **G 1/4"**	**Yes**	① **350 Q=5 l/min** ② **7.5 Crack. pr.**	① **150-420** ② **3-15**	① **236** ② **6.7**
ML000185	**MLST-040-ALGR-00-J38-N420**	V2,C2: **JIS 3/8"** Pil,T,M: **JIS 1/4"**	**No**	①**350 Q=5 l/min** ②**7.5 Crack. pr.**	①**150-420** ②**3-15**	① **236** ② **6.7**
ML000186	**MLST-040-ALGR-00-J38-E420**	V2,C2: **JIS 3/8"** Pil,T,M: **JIS 1/4"**	**Yes**	①**350 Q=5 l/min** ②**7.5 Crack. pr.**	①**150-420** ②**3-15**	① **236** ② **6.7**

CHECK AND METERING VALVE

MLST-040-ALGL

IN LINE VERSION
LEFT VERSION

ATLANTIC Fluid Tech

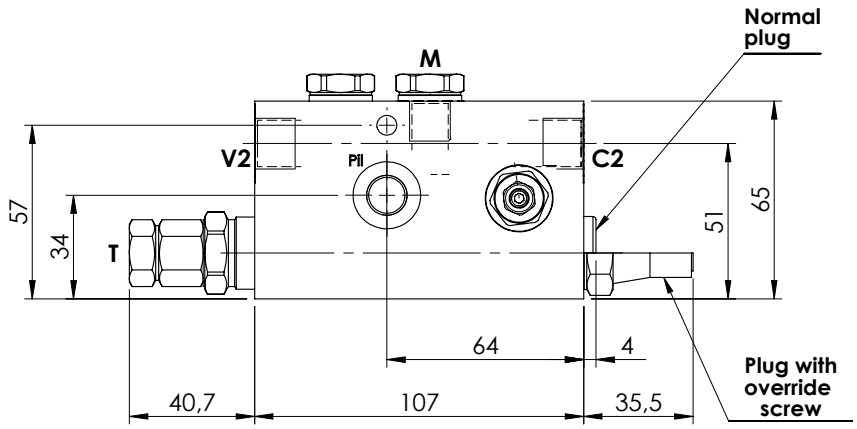

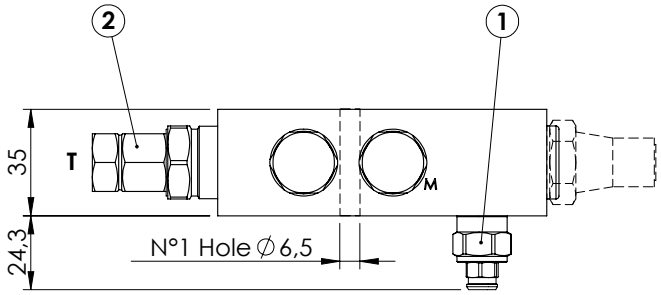

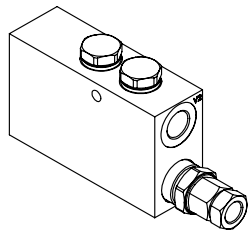

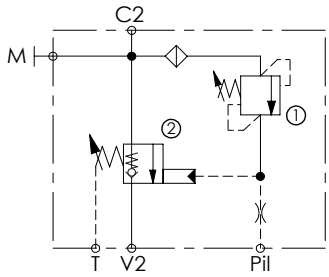

SPECIFICATIONS

Max. operating pressure:	420 bar
Rated flow:	40 l/min
Manifold:	Steel
Weight:	1,86 kg

NOTES

When correctly adjusted for the specific excavator installation, these valves meet the requirement of ISO 8643

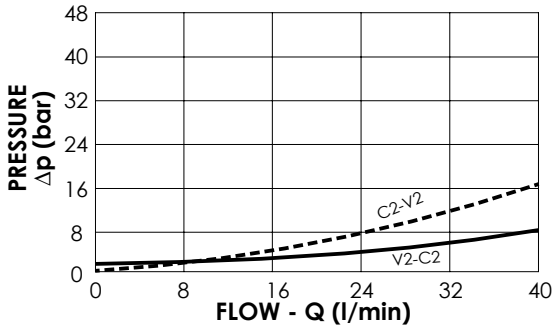

Plug with override screw	Normal plug
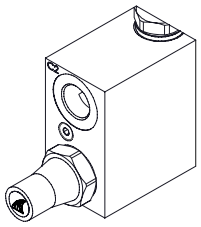	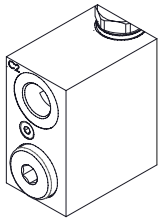

ORDERING CODES

Quick code	Description	Main ports size	Plug with override screw	Standard setting (bar)	Adjust. range (bar)	Pressure increase (bar/turn)
ML000145	MLST-040-ALGL-00-G38-N420	V2,C2: **G 3/8"** Pil,T,M: **G 1/4"**	No	① 350 Q=5 l/min ② 7.5 Crack. pr.	① 150-420 ② 3-15	① 236 ② 6.7
ML000146	MLST-040-ALGL-00-G38-E420	V2,C2: **G 3/8"** Pil,T,M: **G 1/4"**	Yes	① 350 Q=5 l/min ② 7.5 Crack. pr.	① 150-420 ② 3-15	① 236 ② 6.7
ML000187	MLST-040-ALGL-00-J38-N420	V2,C2: **JIS 3/8"** Pil,T,M: **JIS 1/4"**	No	① 350 Q=5 l/min ② 7.5 Crack. pr.	① 150-420 ② 3-15	① 236 ② 6.7
ML000188	MLST-040-ALGL-00-J38-E420	V2,C2: **JIS 3/8"** Pil,T,M: **JIS 1/4"**	Yes	① 350 Q=5 l/min ② 7.5 Crack. pr.	① 150-420 ② 3-15	① 236 ② 6.7

CHECK AND METERING VALVE

MLST-100-ALGR

IN LINE VERSION
RIGHT VERSION

ATLANTIC Fluid Tech

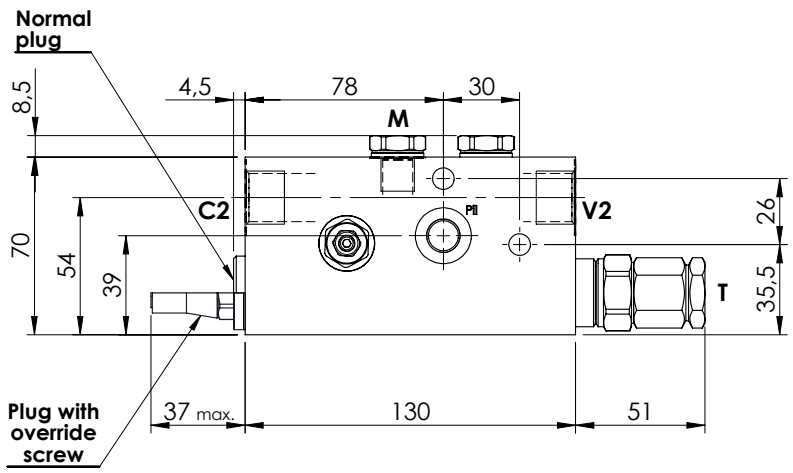

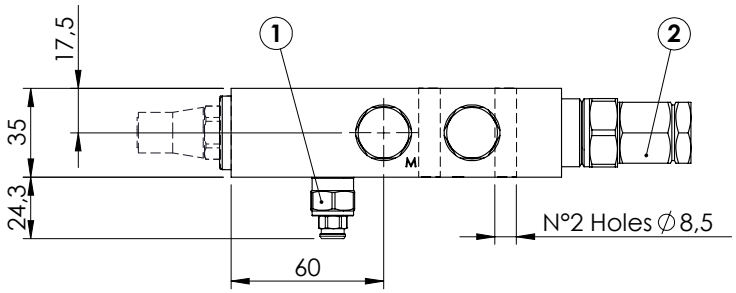

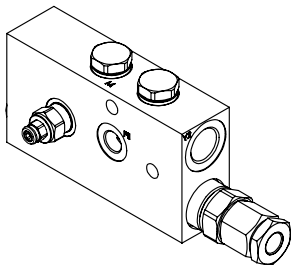

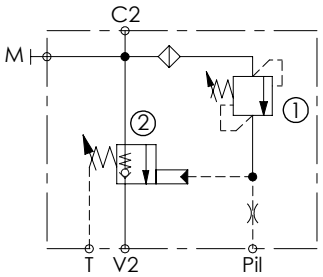

SPECIFICATIONS

Max. operating pressure:	**420 bar**
Rated flow:	**100 l/min**
Manifold:	**Steel**
Weight:	**2,39 kg**

NOTES

When correctly adjusted for the specific excavator installation, these valves meet the requirement of ISO 8643

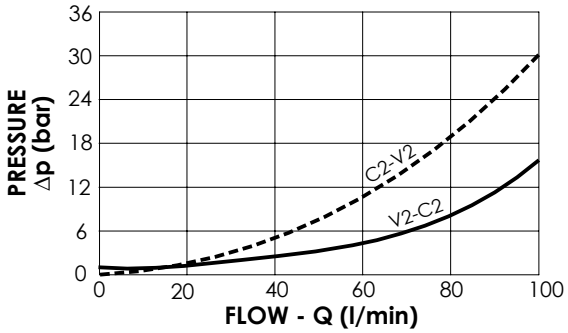

Plug with override screw

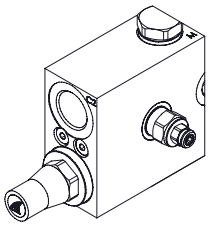

Normal plug

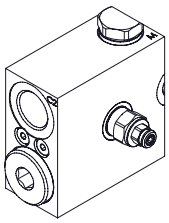

ORDERING CODES

Quick code	Description	Main ports size	Plug with override screw	Standard setting (bar)	Adjust. range (bar)	Pressure increase (bar/turn)
ML000134	**MLST-100-ALGR-00-G12-N420**	V2,C2: **G 1/2"** Pil, T, M: **G 1/4"**	**No**	① **350 Q=5 l/min** ② **7.5 Crack. pr.**	①**150-420** ②**3-15**	① **236** ② **7**
ML000147	**MLST-100-ALGR-00-G12-E420**	V2,C2: **G 1/2"** Pil, T, M: **G 1/4"**	**Yes**	① **350 Q=5 l/min** ② **7.5 Crack. pr.**	①**150-420** ②**3-15**	① **236** ② **7**
ML000135	**MLST-100-ALGR-00-J12-N420**	V2,C2: **JIS 1/2"** Pil, T, M: **JIS 1/4"**	**No**	① **350 Q=5 l/min** ② **7.5 Crack. pr.**	①**150-420** ②**3-15**	① **236** ② **7**
ML000148	**MLST-100-ALGR-00-J12-E420**	V2,C2: **JIS 1/2"** Pil, T, M: **JIS 1/4"**	**Yes**	① **350 Q=5 l/min** ② **7.5 Crack. pr.**	①**150-420** ②**3-15**	① **236** ② **7**

CHECK AND METERING VALVE

MLST-100-ALGL

IN LINE VERSION
LEFT VERSION

ATLANTIC Fluid Tech

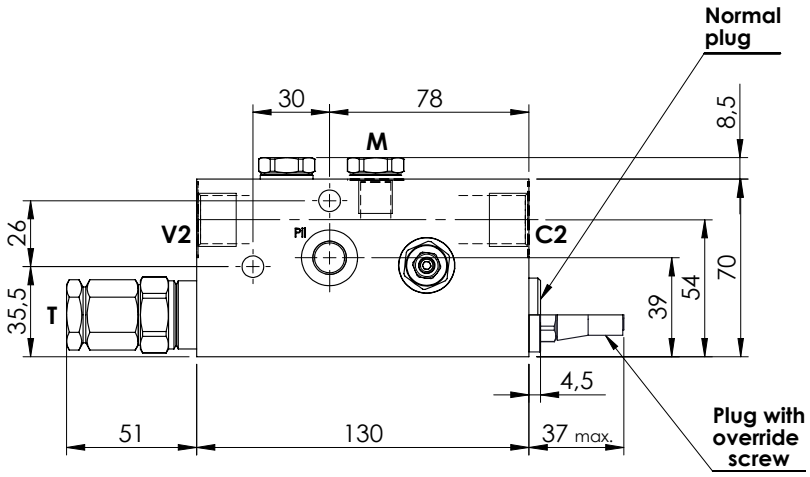

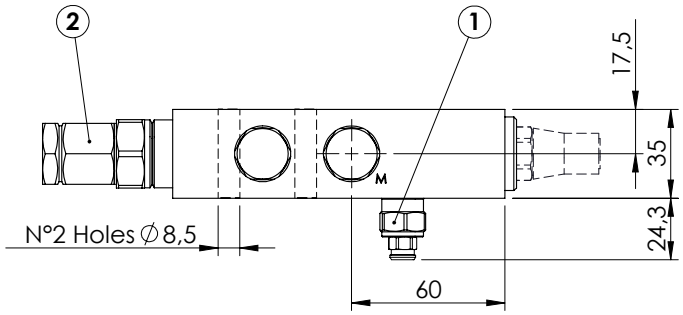

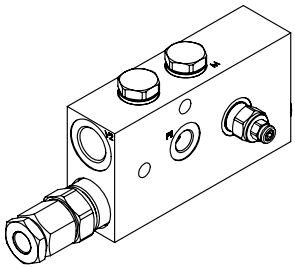

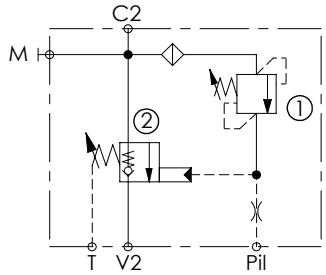

SPECIFICATIONS

Max. operating pressure:	**420 bar**
Rated flow:	**100 l/min**
Manifold:	**Steel**
Weight:	**2,39 kg**

NOTES

When correctly adjusted for the specific excavator installation, these valves meet the requirement of ISO 8643

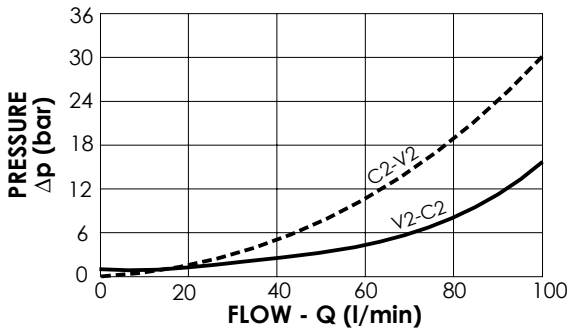

Plug with override screw	Normal plug
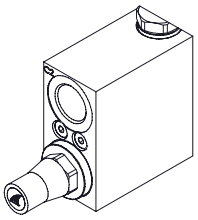	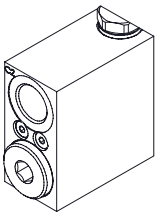

ORDERING CODES

Quick code	Description	Main ports size	Plug with override screw	Standard setting (bar)	Adjust. range (bar)	Pressure increase (bar/turn)
ML000136	**MLST-100-ALGL-00-G12-N420**	V2,C2: **G 1/2"** Pil, T, M: **G 1/4"**	**No**	① **350 Q=5 l/min** ② **7.5 Crack. pr.**	① **150-420** ② **3-15**	① **236** ② **7**
ML000149	**MLST-100-ALGL-00-G12-E420**	V2,C2: **G 1/2"** Pil, T, M: **G 1/4"**	**Yes**	① **350 Q=5 l/min** ② **7.5 Crack. pr.**	① **150-420** ② **3-15**	① **236** ② **7**
ML000137	**MLST-100-ALGL-00-J12-N420**	V2,C2: **JIS 1/2"** Pil, T, M: **JIS 1/4"**	**No**	① **350 Q=5 l/min** ② **7.5 Crack. pr.**	① **150-420** ② **3-15**	① **236** ② **7**
ML000150	**MLST-100-ALGL-00-J12-E420**	V2,C2: **JIS 1/2"** Pil, T, M: **JIS 1/4"**	**Yes**	① **350 Q=5 l/min** ② **7.5 Crack. pr.**	① **150-420** ② **3-15**	① **236** ② **7**

CHECK AND METERING VALVE

MLST-150-ALGR

IN LINE VERSION
RIGHT VERSION

ATLANTIC Fluid Tech

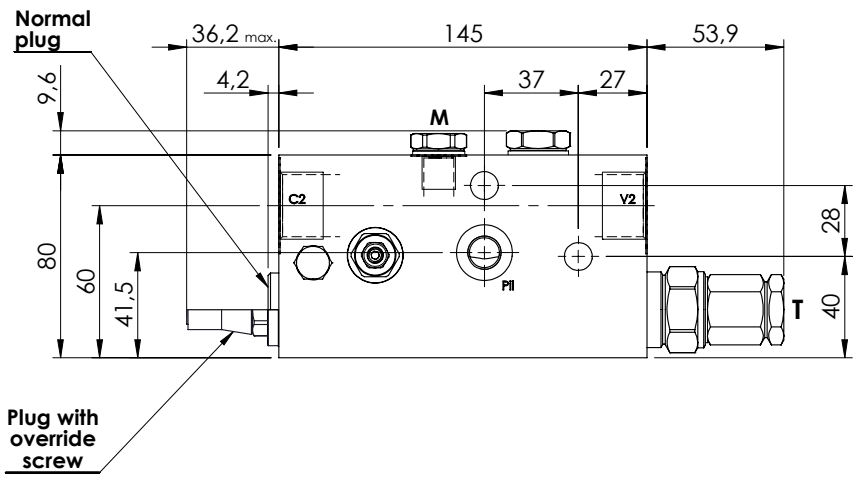

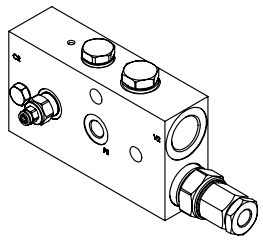

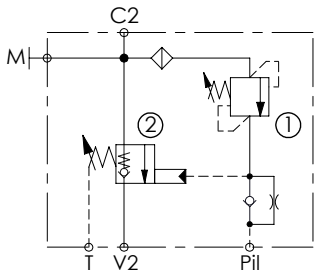

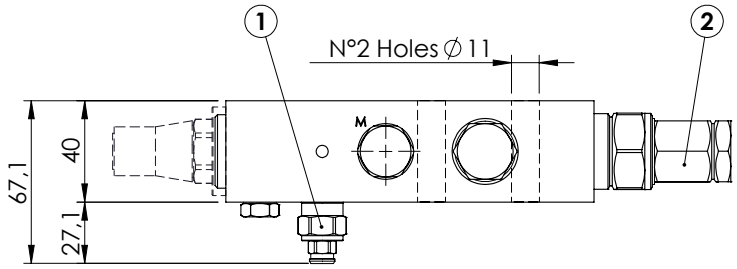

SPECIFICATIONS

Max. operating pressure:	**420 bar**
Rated flow:	**150 l/min**
Manifold:	**Steel**
Weight:	**3,35 kg**

NOTES

When correctly adjusted for the specific excavator installation, these valves meet the requirement of ISO 8643

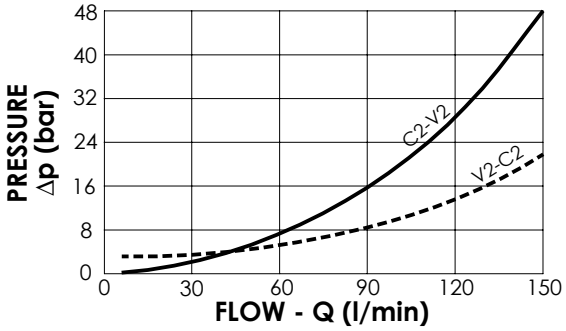

Plug with override screw	Normal plug
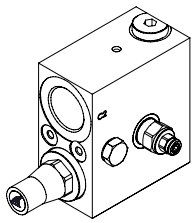	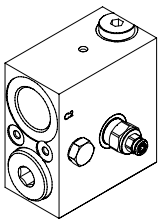

ORDERING CODES

Quick code	Description	Main ports size	Plug with override screw	Standard setting (bar)	Adjust. range (bar)	Pressure increase (bar/turn)
ML000126	**MLST-150-ALGR-00-G34-N420**	V2,C2: **G 3/4"** Pil,T,M: **G 1/4"**	**No**	① **350 Q=5 l/min** ② **7.5 Crack. pr.**	①**150-420** ②**3-15**	① **236** ② **8**
ML000011	**MLST-150-ALGR-00-G34-E420**	V2,C2: **G 3/4"** Pil,T,M: **G 1/4"**	**Yes**	① **350 Q=5 l/min** ② **7.5 Crack. pr.**	①**150-420** ②**3-15**	① **236** ② **8**
ML000122	**MLST-150-ALGR-00-U11-N420**	V2,C2: **1 1/16-12 UNF** Pil,T: **9/16-18 UNF** M: **G 1/4"**	**No**	① **350 Q=5 l/min** ② **7.5 Crack. pr.**	①**150-420** ②**3-15**	① **236** ② **8**
ML000029	**MLST-150-ALGR-00-U11-E420**	V2,C2: **1 1/16-12 UNF** Pil,T: **9/16-18 UNF** M: **G 1/4"**	**Yes**	① **350 Q=5 l/min** ② **7.5 Crack. pr.**	①**150-420** ②**3-15**	① **236** ② **8**
ML000123	**MLST-150-ALGR-00-J34-N420**	V2,C2: **3/4" JIS** Pil,T,M: **1/4" JIS**	**No**	① **350 Q=5 l/min** ② **7.5 Crack. pr.**	①**150-420** ②**3-15**	① **236** ② **8**
ML000105	**MLST-150-ALGR-00-J34-E420**	V2,C2: **3/4" JIS** Pil,T,M: **1/4" JIS**	**Yes**	① **350 Q=5 l/min** ② **7.5 Crack. pr.**	①**150-420** ②**3-15**	① **236** ② **8**

CHECK AND METERING VALVE

MLST-150-ALGL

IN LINE VERSION
LEFT VERSION

ATLANTIC Fluid Tech

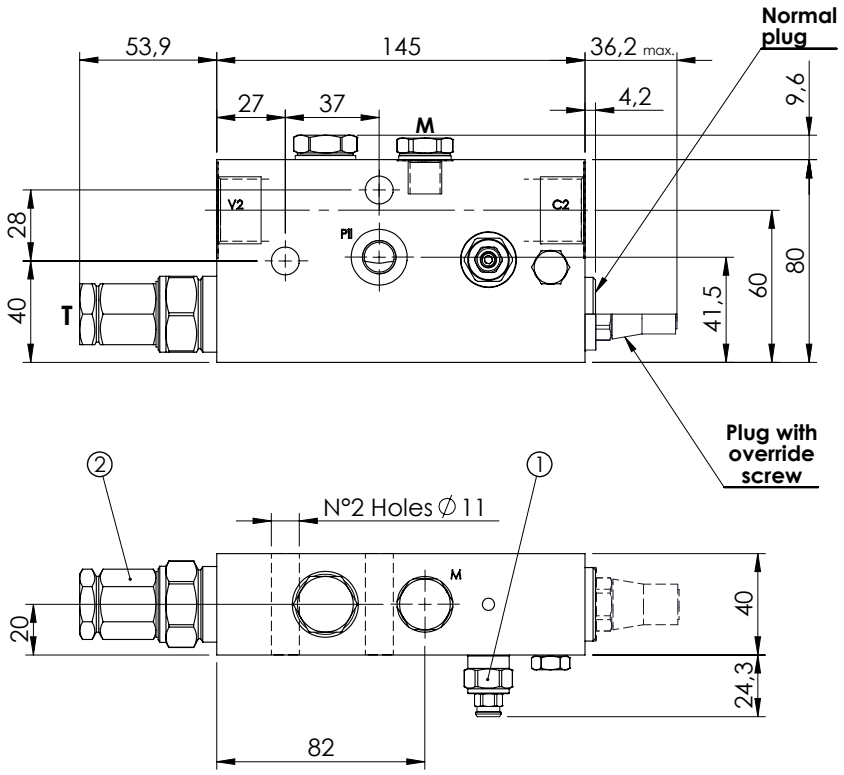

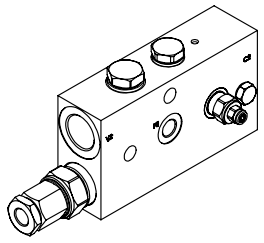

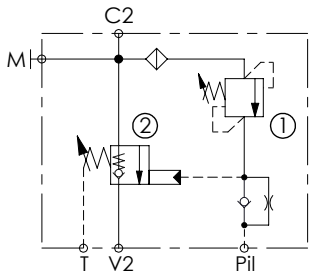

SPECIFICATIONS

Max. operating pressure:	**420 bar**
Rated flow:	**150 l/min**
Manifold:	**Steel**
Weight:	**3,35 kg**

NOTES

When correctly adjusted for the specific excavator installation, these valves meet the requirement of ISO 8643

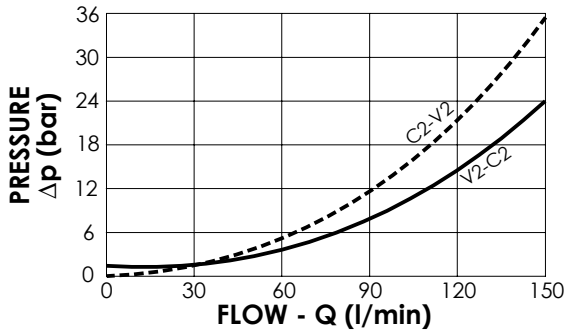

Plug with override screw	Normal plug
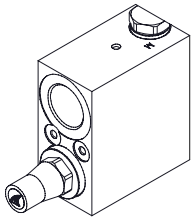	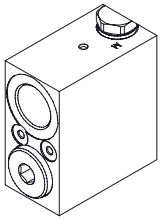

ORDERING CODES

Quick code	Description	Main ports size	Plug with override screw	Standard setting (bar)	Adjust. range (bar)	Pressure increase (bar/turn)
ML000121	**MLST-150-ALGL-00-G34-N420**	V2,C2: **G 3/4"** Pil,T,M: **G 1/4"**	**No**	①**350 Q=5 l/min** ②**7.5 Crack. pr.**	① **150-420** ② **3-15**	① **236** ② **8**
ML000010	**MLST-150-ALGL-00-G34-E420**	V2,C2: **G 3/4"** Pil,T,M: **G 1/4"**	**Yes**	①**350 Q=5 l/min** ②**7.5 Crack. pr.**	① **150-420** ② **3-15**	① **236** ② **8**
ML000124	**MLST-150-ALGL-00-U11-N420**	V2,C2: **1 1/16-12 UNF** Pil,T: **9/16-18 UNF** M: **G 1/4"**	**No**	①**350 Q=5 l/min** ②**7.5 Crack. pr.**	① **150-420** ② **3-15**	① **236** ② **8**
ML000030	**MLST-150-ALGL-00-U11-E420**	V2,C2: **1 1/16-12 UNF** Pil,T: **9/16-18 UNF** M: **G 1/4"**	**Yes**	①**350 Q=5 l/min** ②**7.5 Crack. pr.**	① **150-420** ② **3-15**	① **236** ② **8**
ML000125	**MLST-150-ALGL-00-J34-N420**	V2,C2: **3/4" JIS** Pil,T,M: **1/4" JIS**	**No**	①**350 Q=5 l/min** ②**7.5 Crack. pr.**	① **150-420** ② **3-15**	① **236** ② **8**
ML000104	**MLST-150-ALGL-00-J34-E420**	V2,C2: **3/4" JIS** Pil,T,M: **1/4" JIS**	**Yes**	①**350 Q=5 l/min** ②**7.5 Crack. pr.**	① **150-420** ② **3-15**	① **236** ② **8**

CHECK AND METERING VALVE

MLST-100-AAGN

FLANGED TYPE
1/2" SAE 6000

ATLANTIC
Fluid Tech

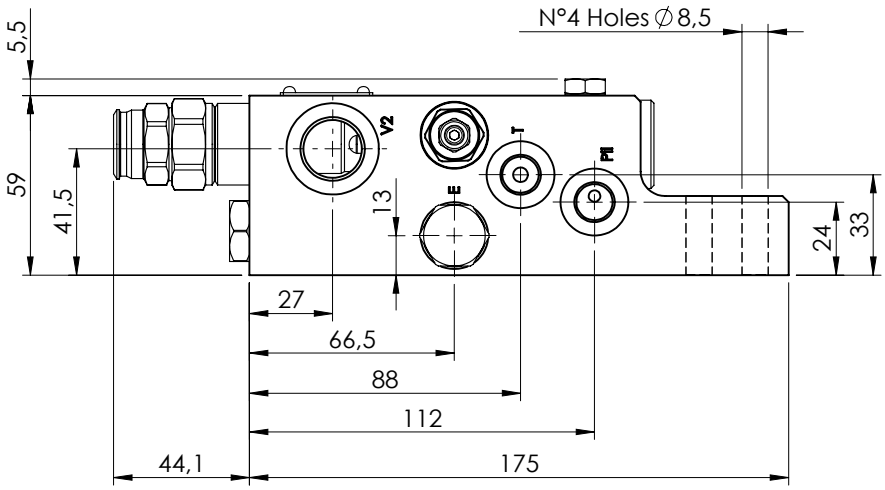

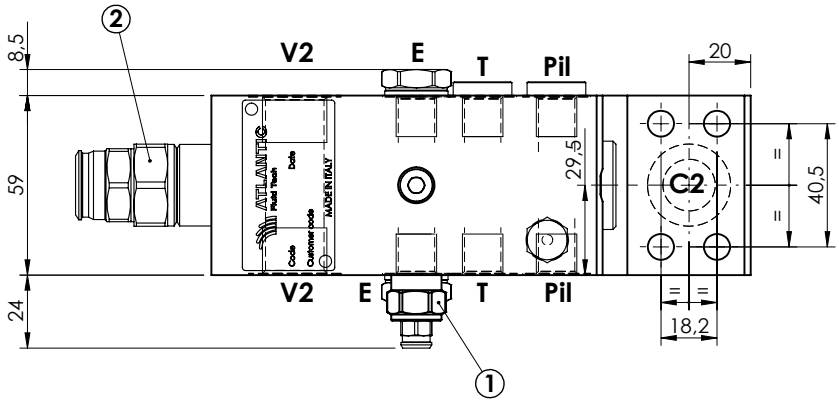

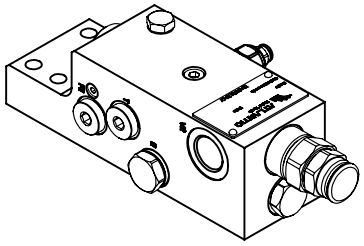

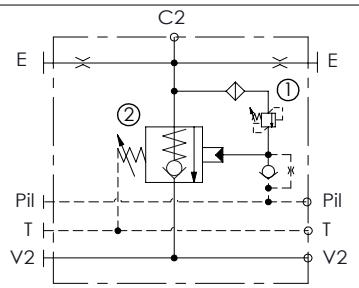

SPECIFICATIONS

Max. operating pressure:	**420 bar**
Rated flow:	**100 l/min**
Manifold:	**Steel**
Weight:	**3,87 kg**

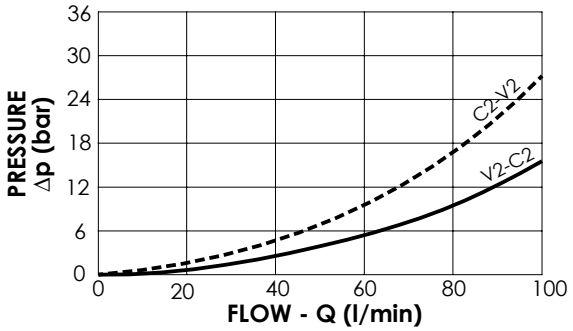

NOTES

When correctly adjusted for the specific excavator installation, these valves meet the requirement of ISO 8643

ORDERING CODES

Quick code	Description	Main ports size	Standard setting (bar)	Adjust. range (bar)	Pressure increase (bar/turn)
ML000130	**MLST-100-AAGN-00-S12-N420**	C2: **1/2" SAE 6000** V2 : **G 1/2"** E,Pil,T: **G 1/4**	① **350 Q=5 l/min** ② **7.5 Crack. pr.**	① **150-420** ② **3-15**	① **236** ② **6**

CHECK AND METERING VALVE

MLST-150-AAGN

FLANGED TYPE
1/2" SAE 6000

ATLANTIC Fluid Tech

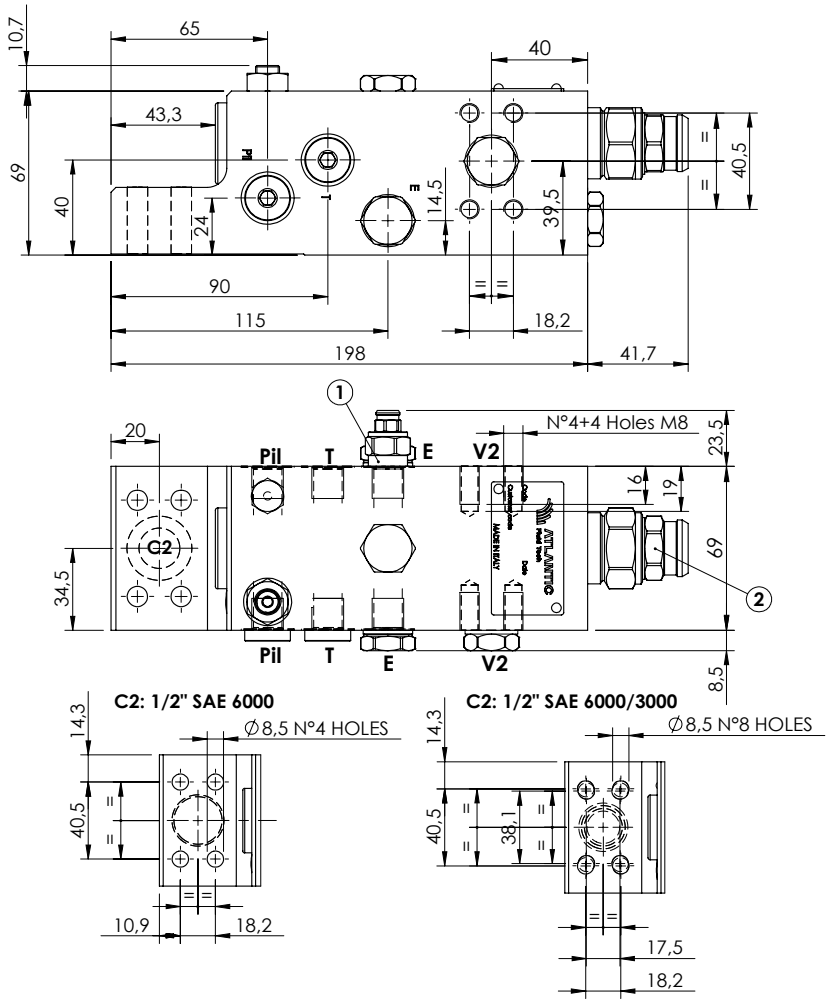

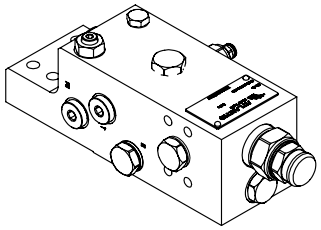

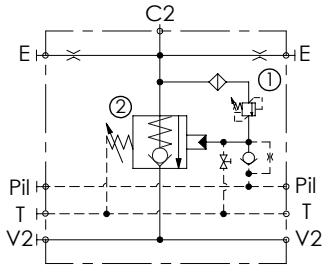

SPECIFICATIONS

Max. operating pressure:	**420 bar**
Rated flow:	**150 l/min**
Manifold:	**Steel**
Weight:	**6,09 kg**

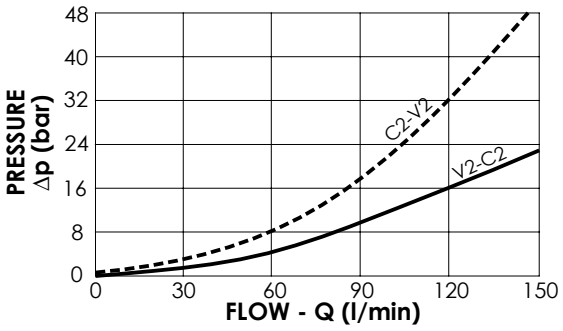

NOTES

When correctly adjusted for the specific excavator installation, these valves meet the requirement of ISO 8643

ORDERING CODES

Quick code	Description	Main ports size	Standard setting (bar)	Adjust. range (bar)	Pressure increase (bar/turn)
ML000082	**MLST-150-AAGN-00-S12-N420**	V2,C2: **1/2" SAE 6000** E,Pil,T: **G 1/4"**	① **350 Q=5 l/min** ② **7.5 Crack. pr.**	① **150-420** ② **3-15**	① **236** ② **5**
ML000083	**MLST-150-ASGN-00-S12-N420**	C2: **1/2" SAE 6000/3000** V2: **1/2" SAE 6000** E,Pil,T: **G 1/4"**	① **350 Q=5 l/min** ② **7.5 Crack. pr.**	① **150-420** ② **3-15**	① **236** ② **5**

CHECK AND METERING VALVE

MLST-200-AAGN

FLANGED TYPE
3/4" SAE 6000

ATLANTIC Fluid Tech

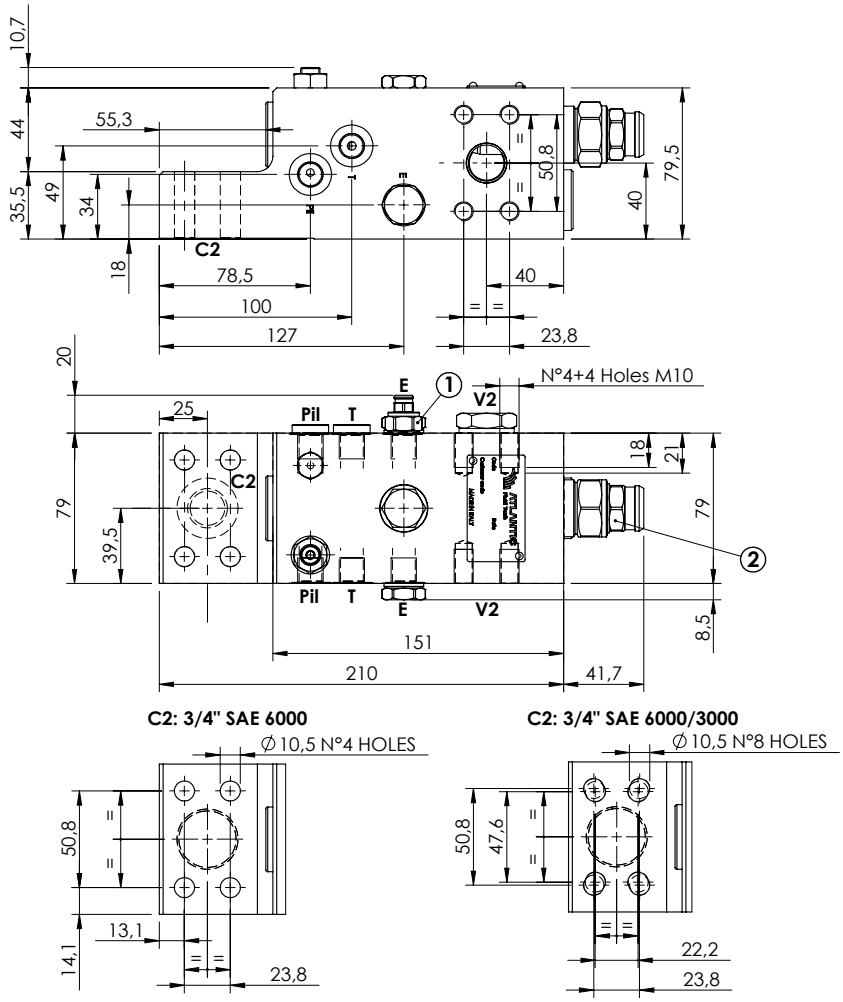

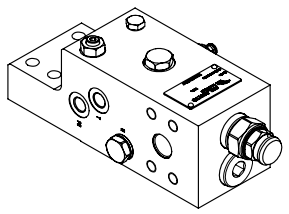

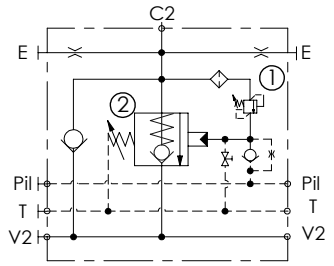

SPECIFICATIONS

Max. operating pressure:	**420 bar**
Rated flow:	**250 l/min**
Manifold:	**Steel**
Weight:	**8,15 kg**

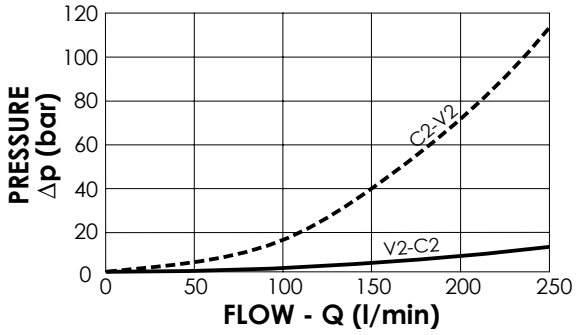

NOTES

When correctly adjusted for the specific excavator installation, these valves meet the requirement of ISO 8643

ORDERING CODES

Quick code	Description	Main ports size	Standard setting (bar)	Adjust. range (bar)	Pressure increase (bar/turn)
ML000075	**MLST-200-AAGN-00-S34-N420**	V2,C2: **3/4" SAE 6000** E,Pil,T: **G 1/4"**	① **350 Q=5 l/min** ② **7.5 Crack. pr.**	① **150-420** ② **3-15**	① **236** ② **5**
ML000076	**MLST-200-AAUD-00-S34-N420**	V2,C2: **3/4" SAE 6000** E,Pil,T: **9/16-18 UNF-2B**	① **350 Q=5 l/min** ② **7.5 Crack. pr.**	① **150-420** ② **3-15**	① **236** ② **5**
ML000091	**MLST-200-ASGN-00-S34-N420**	V2: **3/4" SAE 6000** C2: **3/4" SAE 6000/3000** E,Pil,T: **G 1/4"**	① **350 Q=5 l/min** ② **7.5 Crack. pr.**	① **150-420** ② **3-15**	① **236** ② **5**
ML000112	**MLST-200-ASJN-00-S34-N420**	V2,C2: **3/4" SAE 6000** E,Pil,T: **1/4" JIS**	① **350 Q=5 l/min** ② **7.5 Crack. pr.**	① **150-420** ② **3-15**	① **236** ② **5**

CHECK AND METERING VALVE

MLST-200-AAGN

FLANGED TYPE
1" SAE 6000

ATLANTIC Fluid Tech

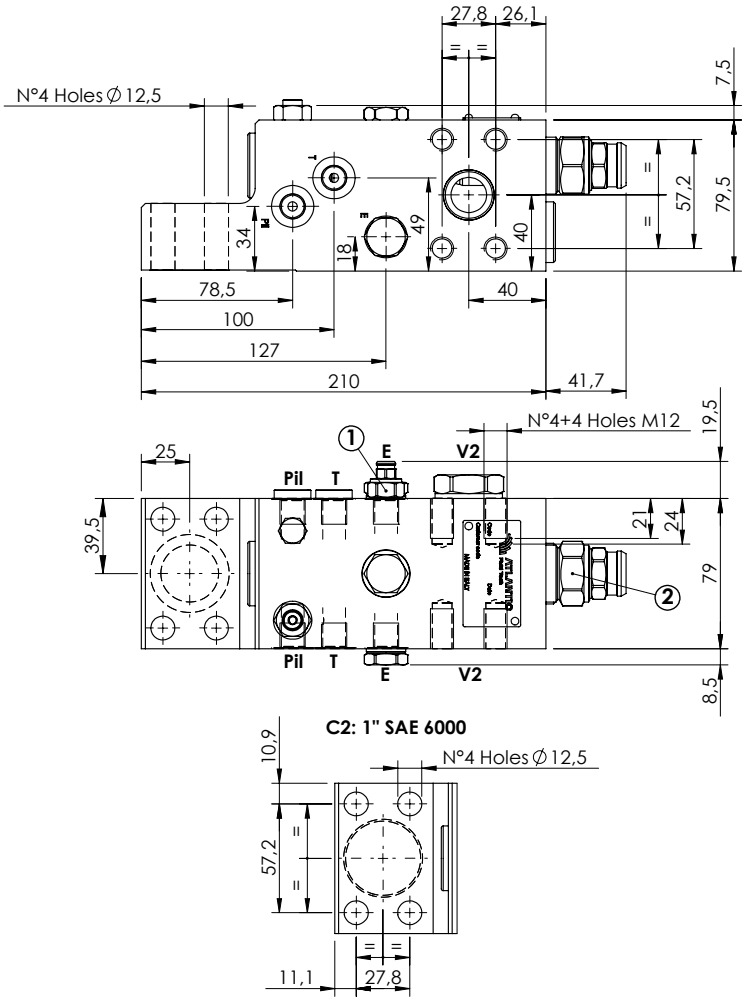

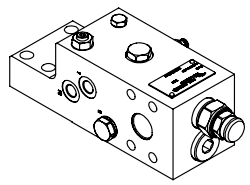

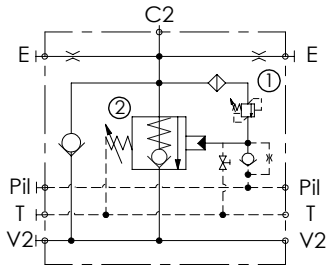

SPECIFICATIONS

Max. operating pressure:	**420 bar**
Rated flow:	**250 l/min**
Manifold:	**Steel**
Weight:	**8 kg**

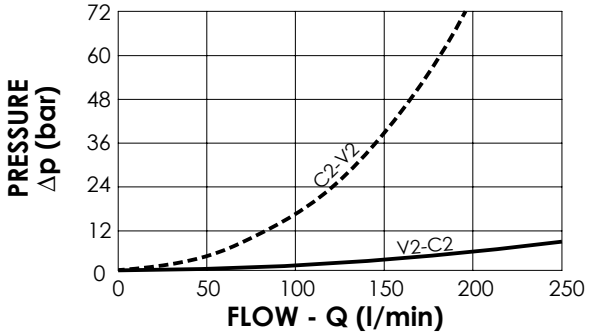

NOTES

When correctly adjusted for the specific excavator installation, these valves meet the requirement of ISO 8643

ORDERING CODES

Quick code	Description	Main ports size	Standard setting (bar)	Adjust. range (bar)	Pressure increase (bar/turn)
ML000138	**MLST-200-AAGN-00-S10-N420**	V2,C2: **1 " SAE 6000** E,Pil,T: **G 1/4"**	① **350 Q=5 l/min** ② **7.5 Crack. pr.**	① **150-420** ② **3-15**	① **236** ② **5**

CHECK AND METERING VALVE

MLST-300-AAGR

FLANGED TYPE
3/4" SAE 6000

ATLANTIC Fluid Tech

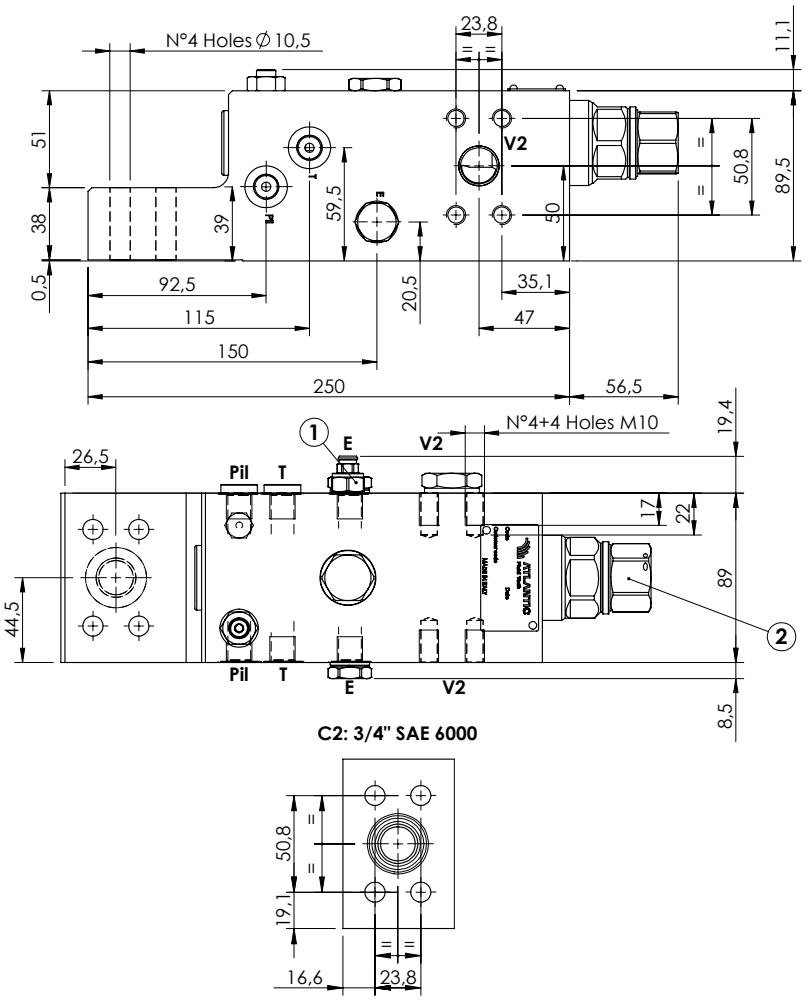

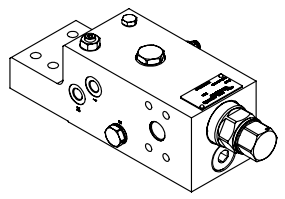

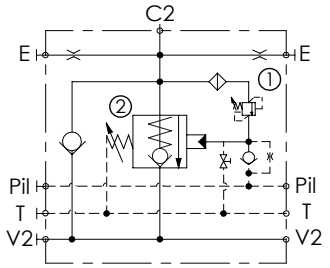

SPECIFICATIONS

Max. operating pressure:	**420 bar**
Rated flow:	**350 l/min**
Manifold:	**Steel**
Weight:	**12,27 kg**

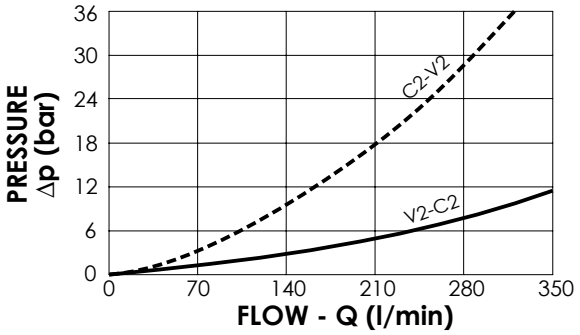

NOTES

When correctly adjusted for the specific excavator installation, these valves meet the requirement of ISO 8643

ORDERING CODES

Quick code	Description	Main ports size	Standard setting (bar)	Adjust. range (bar)	Pressure increase (bar/turn)
ML000106	**MLST-300-AAGR-00-S34-N420**	V2,C2: **3/4" SAE 6000** E,Pil,T: **G 1/4"**	① **350 Q=5 l/min** ② **7.5 Crack. pr.**	① **150-420** ② **3-15**	① **236** ② **3.4**
ML000115	**MLST-300-AAJR-00-S34-N420**	V2,C2: **3/4" SAE 6000** E,Pil,T: **1/4" JIS**	① **350 Q=5 l/min** ② **7.5 Crack. pr.**	① **150-420** ② **3-15**	① **236** ② **3.4**

CHECK AND METERING VALVE

MLST-300-AAGN

FLANGED TYPE
1" SAE 6000

ATLANTIC Fluid Tech

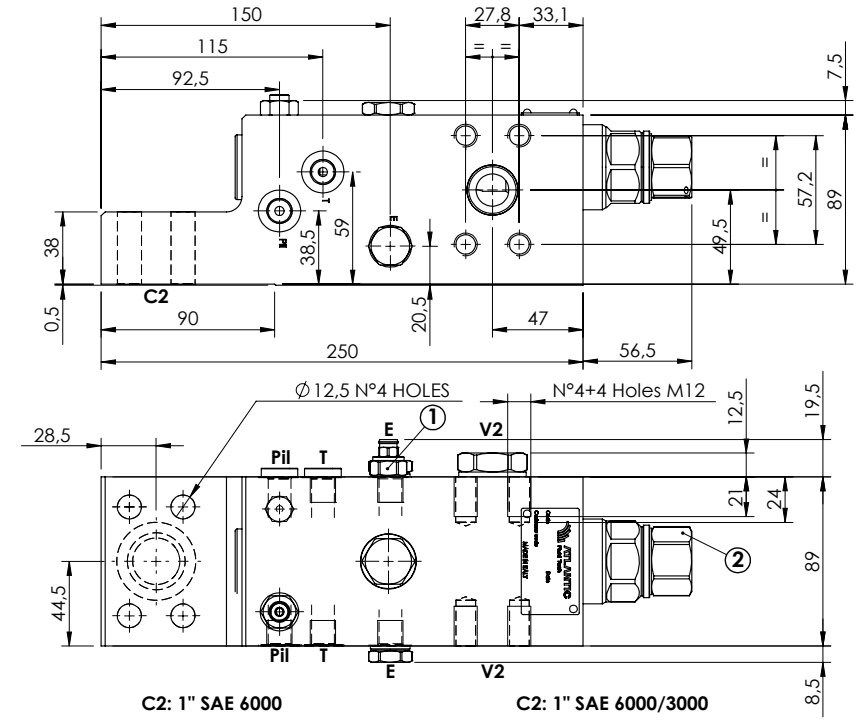

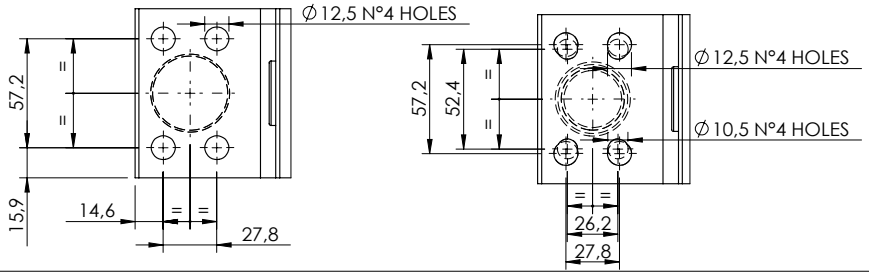

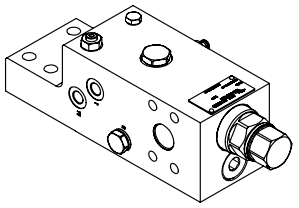

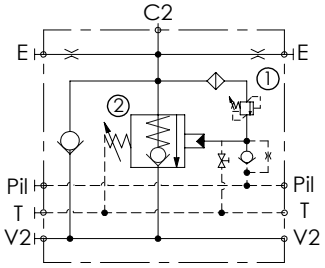

SPECIFICATIONS

Max. operating pressure:	**420 bar**
Rated flow:	**400 l/min**
Manifold:	**Steel**
Weight:	**12,14 kg**

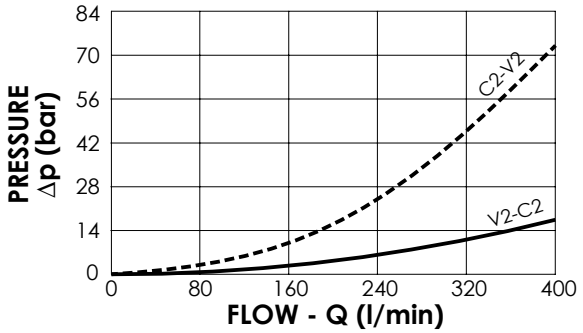

NOTES

When correctly adjusted for the specific excavator installation, these valves meet the requirement of ISO 8643

ORDERING CODES

Quick code	Description	Main ports size	Standard setting (bar)	Adjust. range (bar)	Pressure increase (bar/turn)
ML000079	**MLST-300-AAGN-00-S10-N420**	V2,C2: **1 " SAE 6000** E,Pil,T: **G 1/4"**	① **350 Q=5 l/min** ② **7.5 Crack. pr.**	① **150-420** ② **3-15**	① **236** ② **3.4**
ML000080	**MLST-300-AAUN-00-S10-N420**	V2,C2: **1 " SAE 6000** E,Pil,T: **9/16-18 UNF-2B**	① **350 Q=5 l/min** ② **7.5 Crack. pr.**	① **150-420** ② **3-15**	① **236** ② **3.4**
ML000081	**MLST-300-ASGN-00-S10-N420**	**V2: 1" SAE 6000** **C2: 1" SAE 6000/3000** **E, Pil, T: G 1/4"**	① **350 Q=5 l/min** ② **7.5 Crack. pr.**	① **150-420** ② **3-15**	① **236** ② **3.4**
ML000177	**MLST-300-ASJN-00-S10-N420**	V2,C2: **1" SAE 6000** E, Pil, T: **JIS 1/4"**	① **350 Q=5 l/min** ② **7.5 Crack. pr.**	① **150-420** ② **3-15**	① **236** ② **3.4**

CHECK AND METERING VALVE

MLST-300-AAGN

FLANGED TYPE
1 1/4" SAE 6000

ATLANTIC Fluid Tech

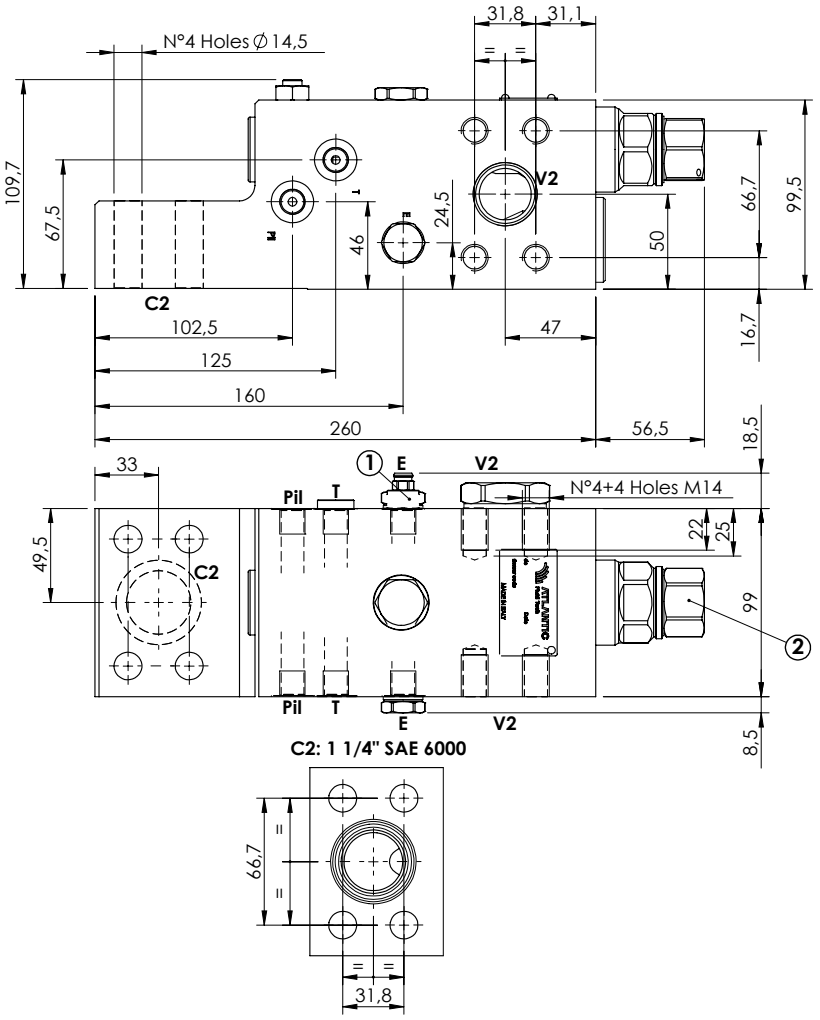

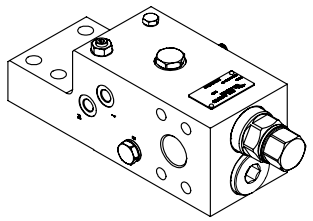

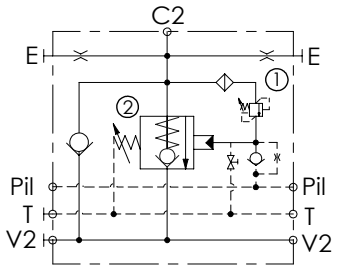

SPECIFICATIONS

Max. operating pressure:	**420 bar**
Rated flow:	**500 l/min**
Manifold:	**Steel**
Weight:	**15,17 kg**

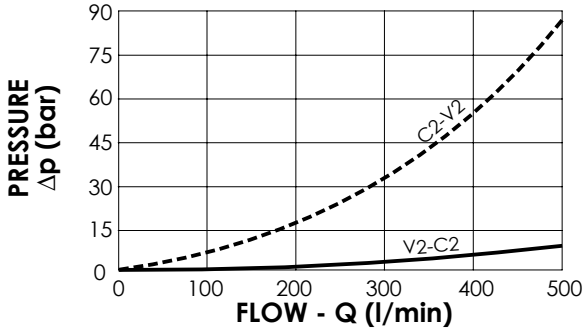

NOTES

When correctly adjusted for the specific excavator installation, these valves meet the requirement of ISO 8643

ORDERING CODES

Quick code	Description	Main ports size	Standard setting (bar)	Adjust. range (bar)	Pressure increase (bar/turn)
ML000077	**MLST-300-AAGN-00-S11-N420**	V2,C2: **1 1/4" SAE 6000** E,Pil,T: **G 1/4"**	① **350 Q=5 l/min** ② **7.5 Crack. pr.**	① **150-420** ② **3-15**	① **236** ② **3.4**
ML000078	**MLST-300-AAUN-00-S11-N420**	V2,C2: **1 1/4" SAE 6000** E,Pil,T: **9/16-18 UNF-2B**	① **350 Q=5 l/min** ② **7.5 Crack. pr.**	① **150-420** ② **3-15**	① **236** ② **3.4**
ML000131	**MLST-300-AAJN-00-S11-N420**	V2,C2: **1 1/4" SAE 6000** E,Pil,T: **1/4" JIS**	① **350 Q=5 l/min** ② **7.5 Crack. pr.**	① **150-420** ② **3-15**	① **236** ② **3.4**

CHECK AND METERING VALVE

MLST-500-AAJN

FLANGED TYPE
3/4" SAE 6000

ATLANTIC Fluid Tech

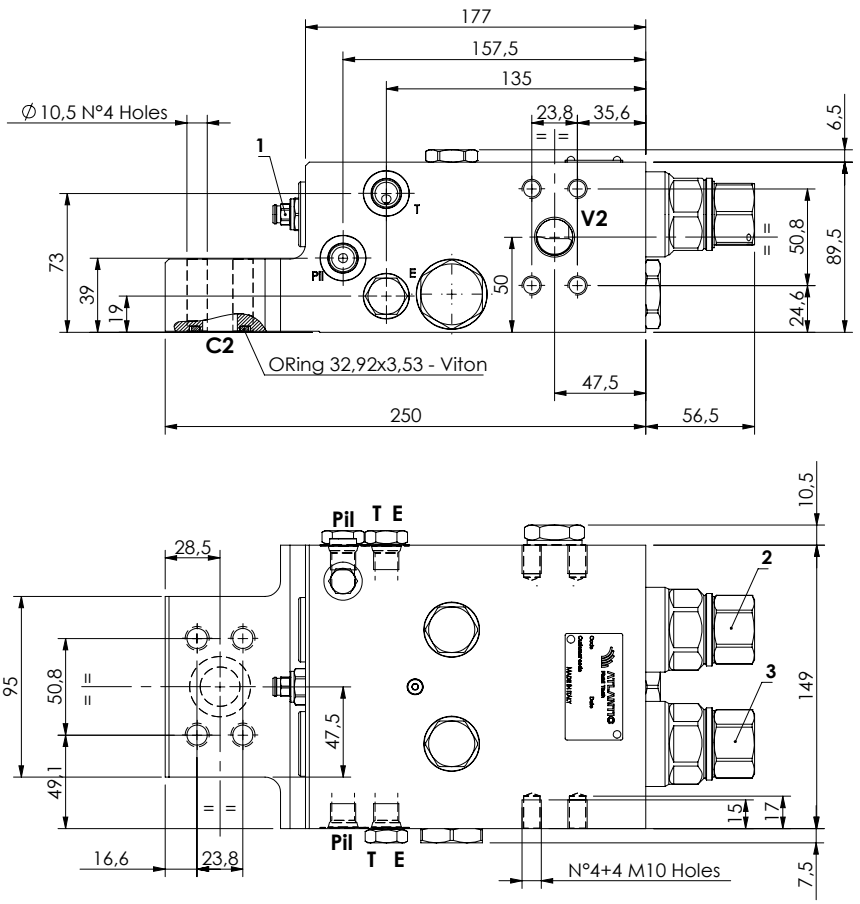

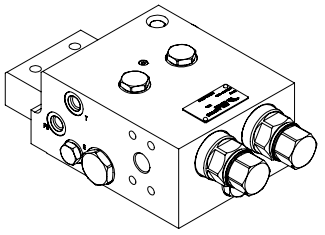

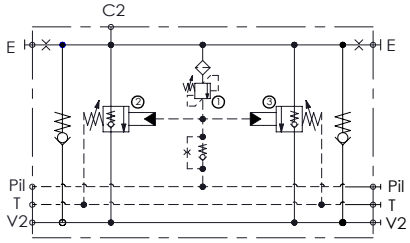

SPECIFICATIONS

Max. operating pressure:	**420 bar**
Rated flow:	**500 l/min**
Manifold:	**Steel**
Weight:	**19,57 kg**

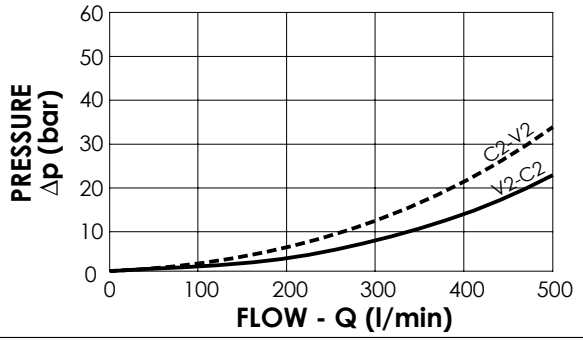

NOTES

When correctly adjusted for the special excavator installation, these valves meet the requirement of ISO 8643

ORDERING CODES

Quick code	Description	Main ports size	Standard setting (bar)	Adjust. range (bar)	Pressure increase (bar/turn)
ML000263	**MLST-500-AAJN-00-S34-N420**	V2,C2: **3/4" SAE 6000** E,Pil,T: **JIS 1/4"**	① **350 Q=5 l/min** ②③**7.5 Crack. pr.**	① **150-420** ②③**3-15**	①**236** ②③**3.4**

CHECK AND METERING VALVE

MLST-500-AAGN

FLANGED TYPE
1" SAE 6000

ATLANTIC Fluid Tech

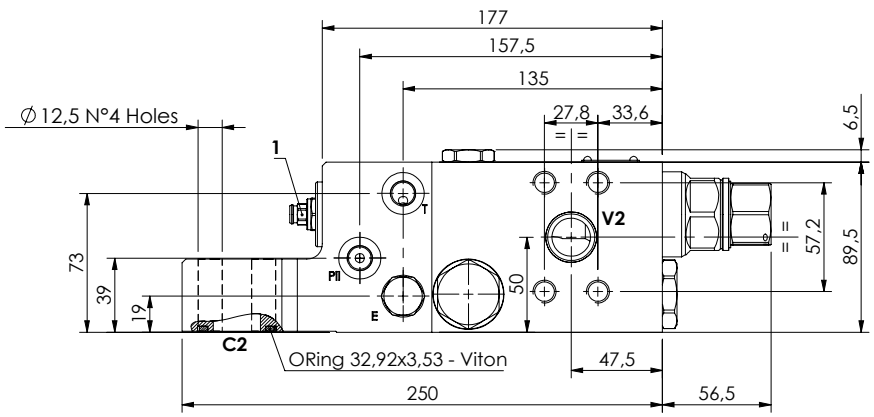

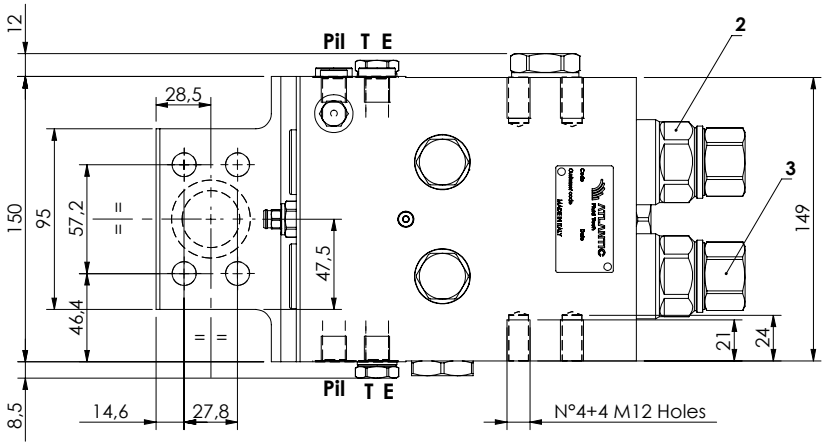

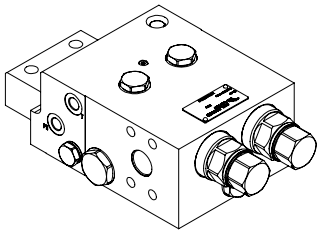

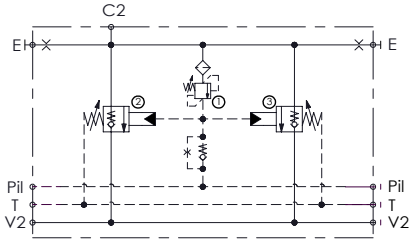

SPECIFICATIONS

Max. operating pressure:	**420 bar**
Rated flow:	**500 l/min**
Manifold:	**Steel**
Weight:	**19,49 kg**

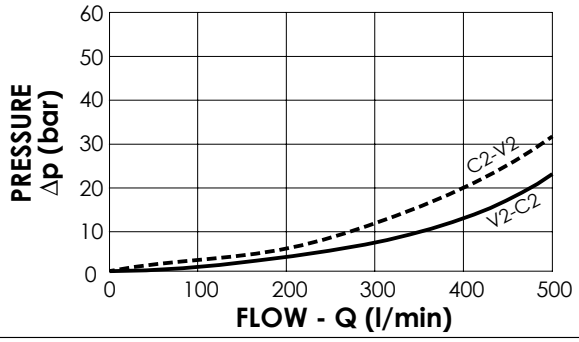

NOTES

When correctly adjusted for the special excavator installation, these valves meet the requirement of ISO 8643

ORDERING CODES

Quick code	Description	Main ports size	Standard setting (bar)	Adjust. range (bar)	Pressure increase (bar/turn)
ML000113	**MLST-500-AAGN-00-S10-N420**	V2,C2: **1" SAE 6000** E,Pil,T: **G 1/4"**	① **370 Q=5 l/min** ② **10 Crack. pr.** ③ **7.5 Crack. pr.**	① **150-420** ②③**3-15**	① **236** ②③ **3.4**

CHECK AND METERING VALVE

MLST-550-AAGN

FLANGED TYPE
1" 1/4 SAE 6000

ATLANTIC Fluid Tech

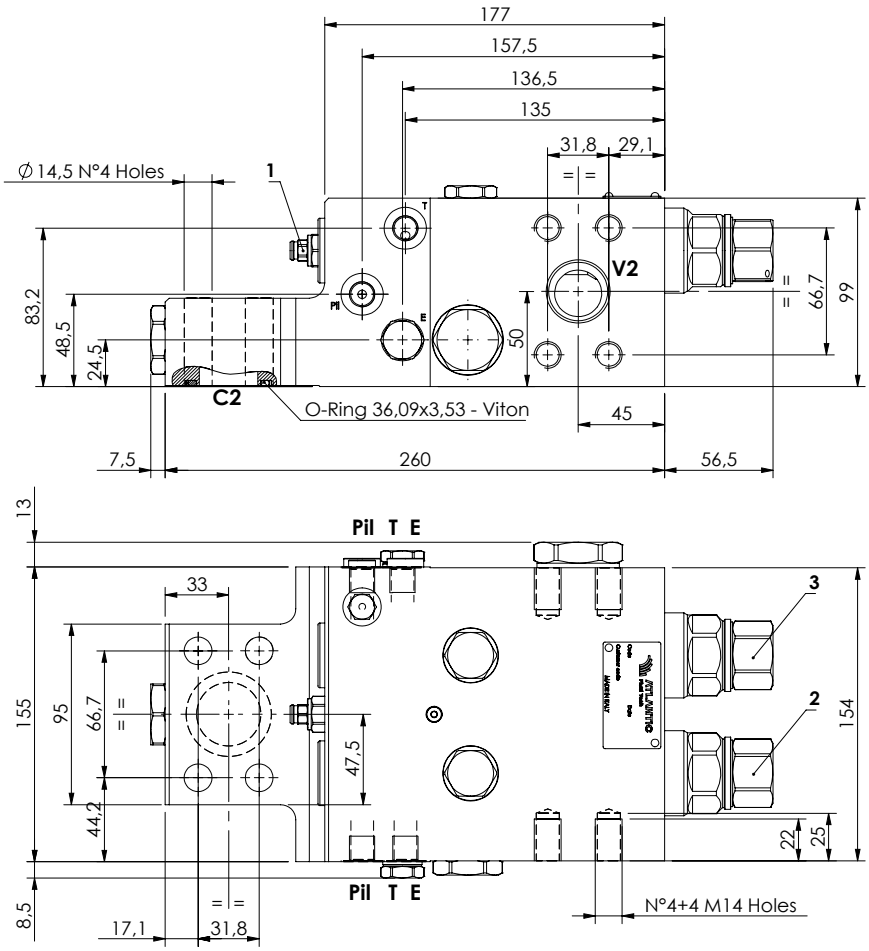

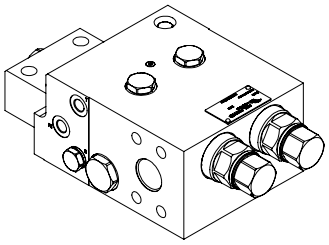

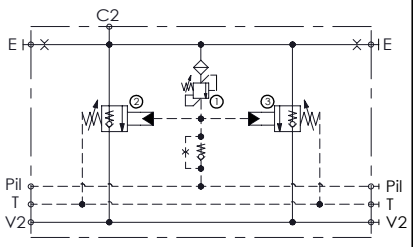

SPECIFICATIONS

Max. operating pressure:	**420 bar**
Rated flow:	**550 l/min**
Manifold:	**Steel**
Weight:	**22,67 kg**

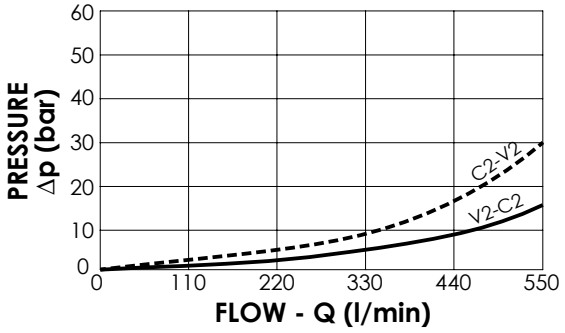

NOTES

When correctly adjusted for the special excavator installation, these valves meet the requirement of ISO 8643

ORDERING CODES

Quick code	Description	Main ports size	Standard setting (bar)	Adjust. range (bar)	Pressure increase (bar/turn)
ML000161	**MLST-550-AAGN-00-S11-N420**	V2,C2:**1" 1/4 SAE 6000** E,Pil,T:**G 1/4"**	① **350 Q=5 l/min** ②③**7.5 Crack. pr.**	① **150-420** ②③**3-15**	① **236** ②③**3.4**

CHECK AND METERING VALVE

MLST-700-AAGN

FLANGED TYPE
1" 1/4 SAE 6000

ATLANTIC Fluid Tech

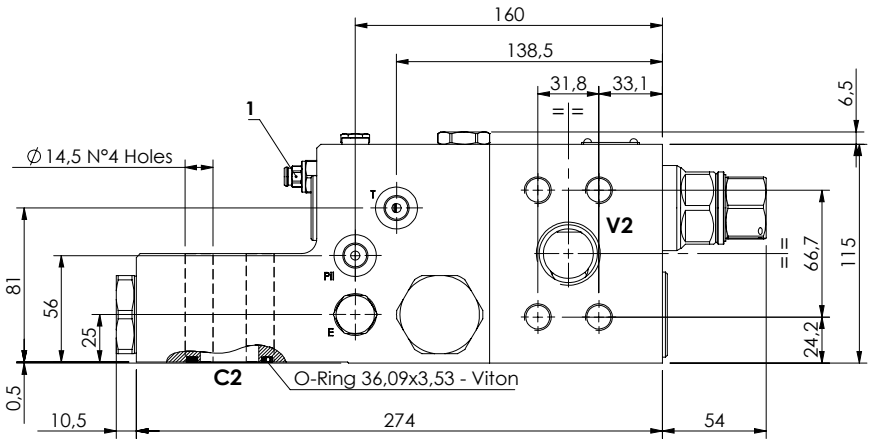

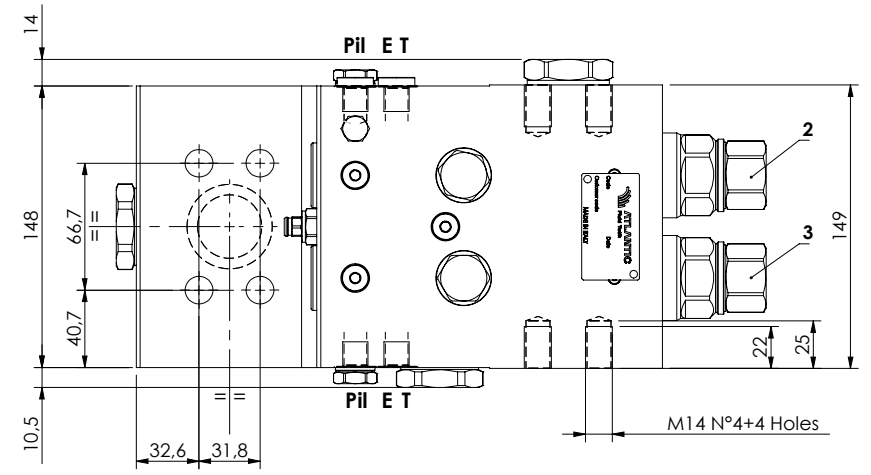

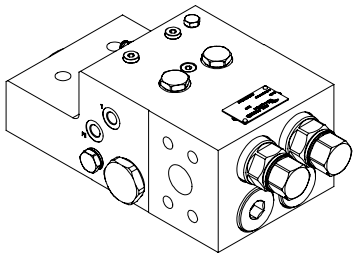

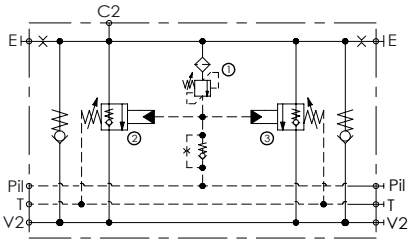

SPECIFICATIONS

Max. operating pressure:	**420 bar**
Rated flow:	**700 l/min**
Manifold:	**Steel**
Weight:	**27,5 kg**

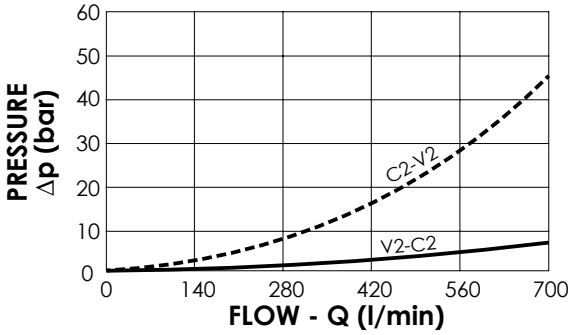

NOTES

When correctly adjusted for the special excavator installation, these valves meet the requirement of ISO 8643

ORDERING CODES

Quick code	Description	Main ports size	Standard setting (bar)	Adjust. range (bar)	Pressure increase (bar/turn)
ML000211	**MLST-700-AAGN-00-S11-N420**	V2,C2:**1" 1/4 SAE 6000** E,Pil,T:**G 1/4"**	**①400 Q=5 l/min** **②10.5 Crack. pr.** **③7.5 Crack. pr.**	**①150-420** **②③3-15**	**① 236** **②③3.4**

CHECK AND METERING VALVE

MLST-700-AAGN

FLANGED TYPE
1" 1/2 SAE 6000

ATLANTIC Fluid Tech

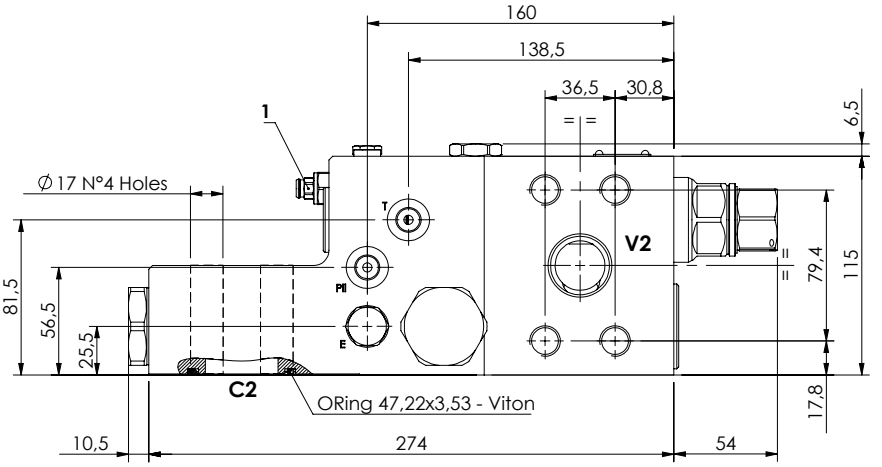

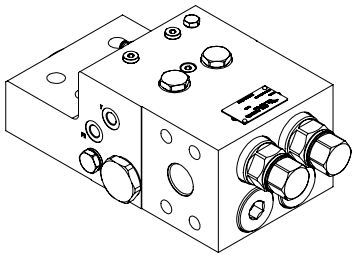

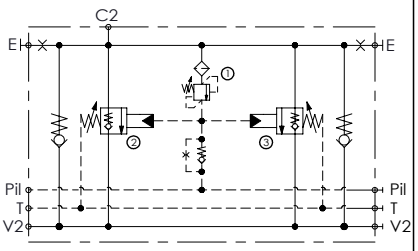

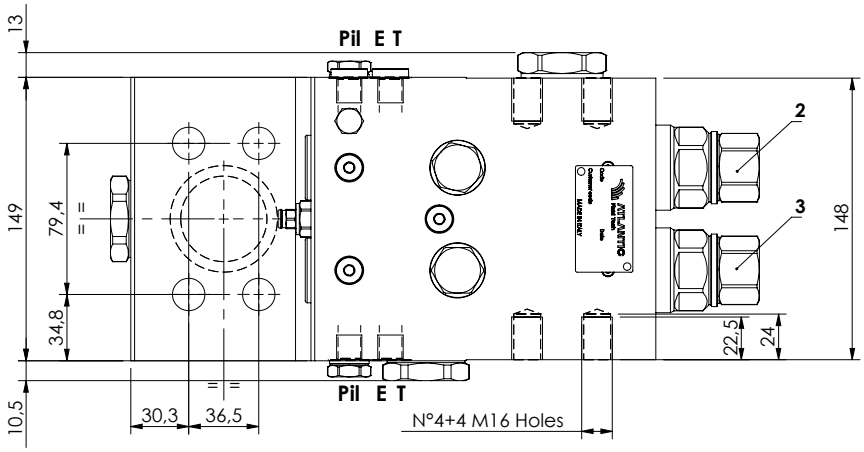

SPECIFICATIONS

Max. operating pressure:	**420 bar**
Rated flow:	**700 l/min**
Manifold:	**Steel**
Weight:	**27,3 kg**

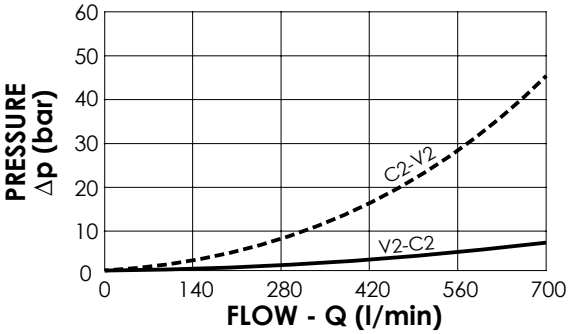

NOTES

When correctly adjusted for the special excavator installation, these valves meet the requirement of ISO 8643

ORDERING CODES

Quick code	Description	Main ports size	Standard setting (bar)	Adjust. range (bar)	Pressure increase (bar/turn)
ML000098	**MLST-700-AAGN-00-S22-N420**	V2,C2:**1" 1/2 SAE 6000** E,Pil,T:**G 1/4"**	① **400 Q=5 l/min** ② **10.5 Crack. pr.** ③ **7.5 Crack. pr.**	① **150-420** ②③ **3-15**	① **236** ②③ **3.4**
ML000094	**MLST-700-AAJN-00-S22-N420**	V2,C2:**1" 1/2 SAE 6000** E,Pil,T:**1/4" JIS**	① **400 Q=5 l/min** ② **10.5 Crack. pr.** ③ **7.5 Crack. pr.**	① **150-420** ②③ **3-15**	① **236** ②③ **3.4**

CHECK AND METERING VALVE

MLST-1400-AAGN

FLANGED TYPE
1" 1/2 SAE 6000

ATLANTIC Fluid Tech

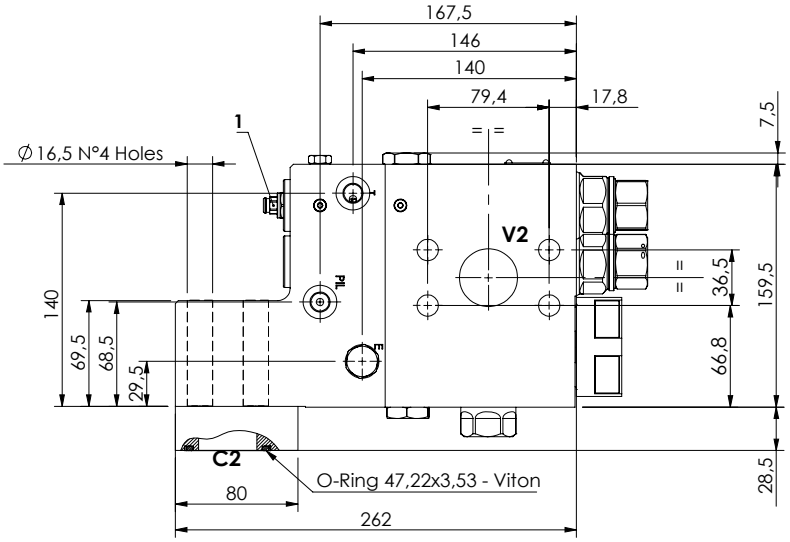

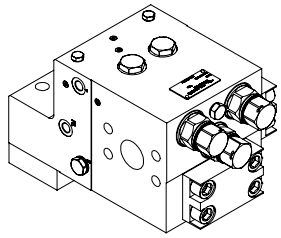

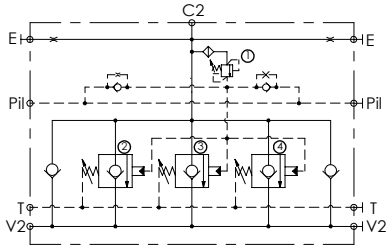

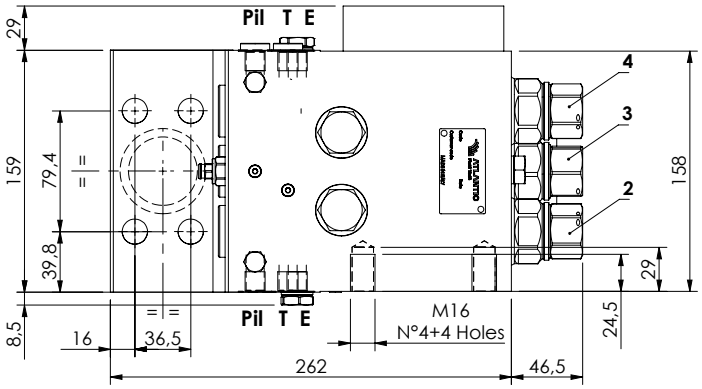

SPECIFICATIONS

Max. operating pressure:	**420 bar**
Rated flow:	**1400 l/min**
Manifold:	**Steel**
Weight:	**43,18 kg**

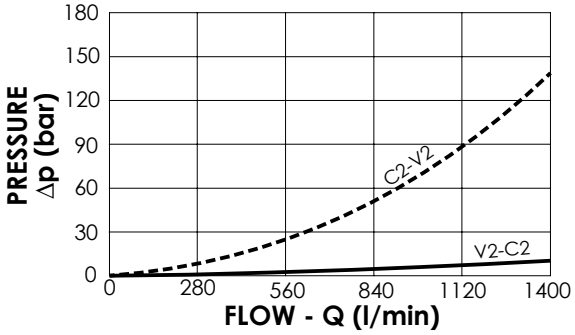

NOTES

When correctly adjusted for the special excavator installation, these valves meet the requirement of ISO 8643

ORDERING CODES

Quick code	Description	Main ports size	Standard setting (bar)	Adjust. range (bar)	Pressure increase (bar/turn)
ML000162	**MLST-1400-AAGN-00-S22-N420**	V2,C2:**1" 1/2 SAE 6000** E,Pil,T:**G 1/4"**	**①400 Q=5 l/min** **③7.5 Crack. pr.** **②④8.5 Crack. pr.**	**①150-420** **②③④3-15**	**①236** **②③④3.4**

CHECK AND METERING VALVE

MLST-1400-AAGR

FLANGED TYPE
2" SAE 6000
RIGHT VERSION

ATLANTIC Fluid Tech

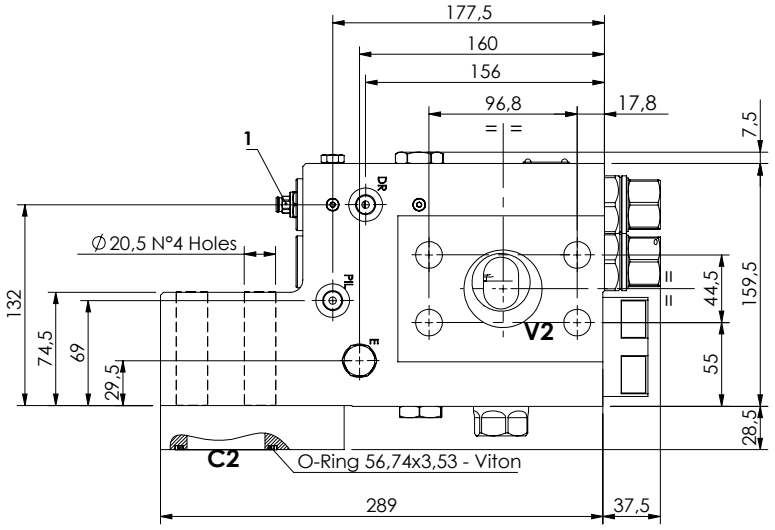

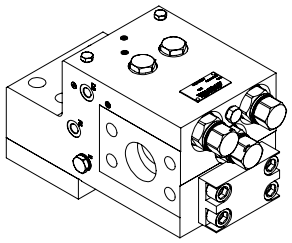

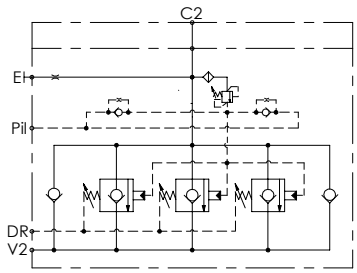

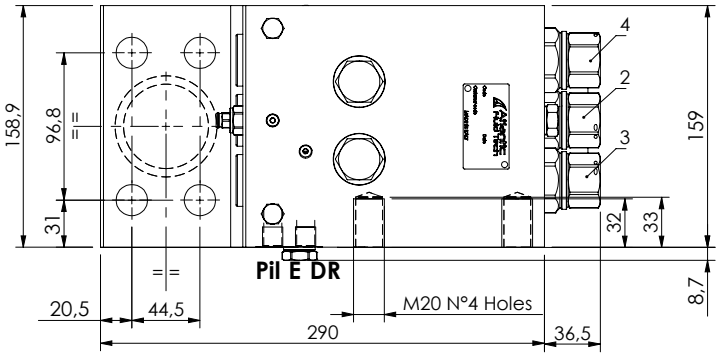

SPECIFICATIONS

Max. operating pressure:	**420 bar**
Rated flow:	**1400 l/min**
Manifold:	**Steel**
Weight:	**45,87 kg**

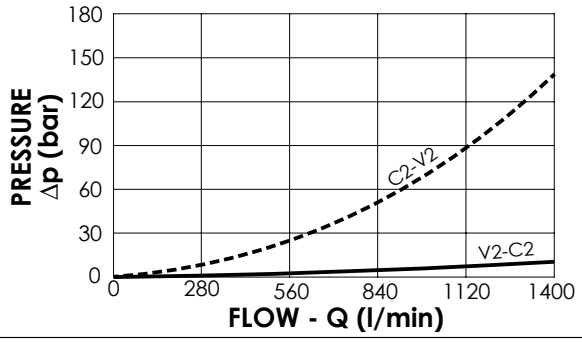

NOTES

When correctly adjusted for the special excavator installation, these valves meet the requirement of ISO 8643

ORDERING CODES

Quick code	Description	Main ports size	Standard setting (bar, Q=5 l/min)	Adjust. range (bar)	Pressure increase (bar/turn)
ML000167	**MLST-1400-AAGR-00-S20-N420**	V2,C2: **2" SAE 6000** E,Pil,DR: **G 1/4"**	**①400 Q=5 l/min** **②7,5 Crack. pr.** **③④8,5 Crack. pr.**	**①150-420** **②③④3-15**	**①236** **②③④3.4**

CHECK AND METERING VALVE

MLST-1400-AAGL

FLANGED TYPE
2" SAE 6000
LEFT VERSION

ATLANTIC Fluid Tech

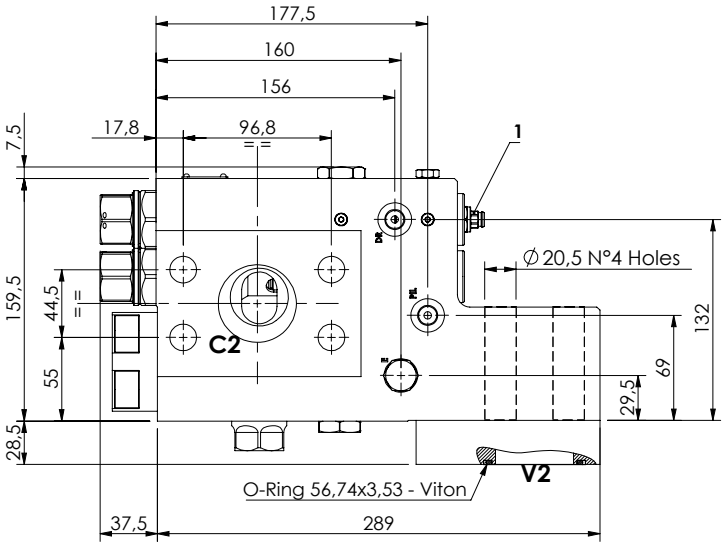

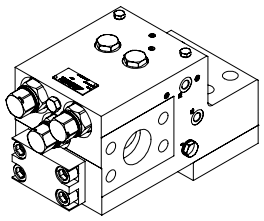

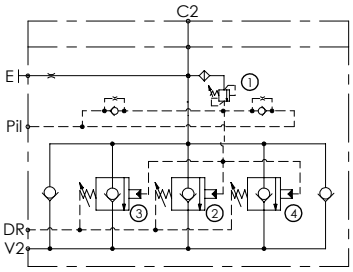

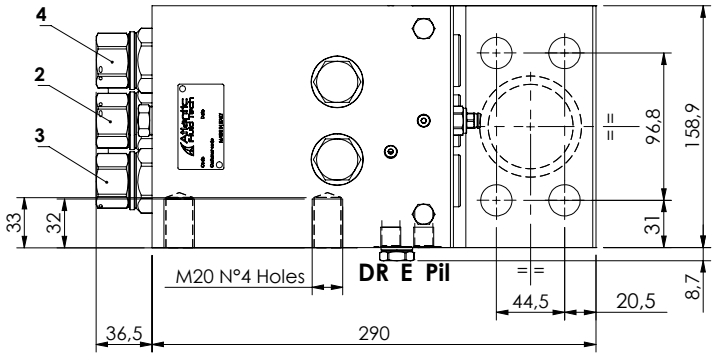

SPECIFICATIONS

Max. operating pressure:	**420 bar**
Rated flow:	**1400 l/min**
Manifold:	**Steel**
Weight:	**45,85 kg**

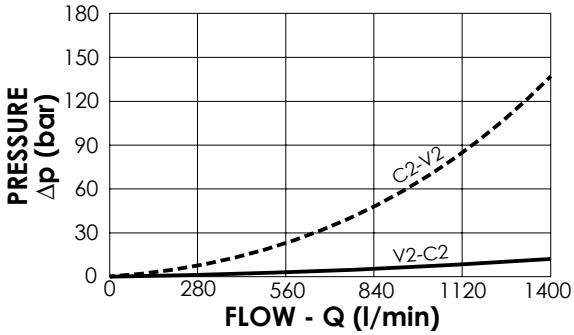

NOTES

When correctly adjusted for the special excavator installation, these valves meet the requirement of ISO 8643

ORDERING CODES

Quick code	Description	Main ports size	Standard setting (bar)	Adjust. range (bar)	Pressure increase (bar/turn)
ML000166	**MLST-1400-AAGL-00-S20-N420**	V2,C2:**2" SAE 6000** E,Pil,T:**G 1/4"**	**①400 Q=5 l/min** **②7,5 Crack. pr.** **③④8,5 Crack. pr.**	**①150-420** **②③④3-15**	**①236** **②③④3.4**

CHECK AND METERING VALVE

MLST-1500-AAGR

FLANGED TYPE
3" SAE 3000 / 2" SAE 6000
RIGHT VERSION

ATLANTIC Fluid Tech

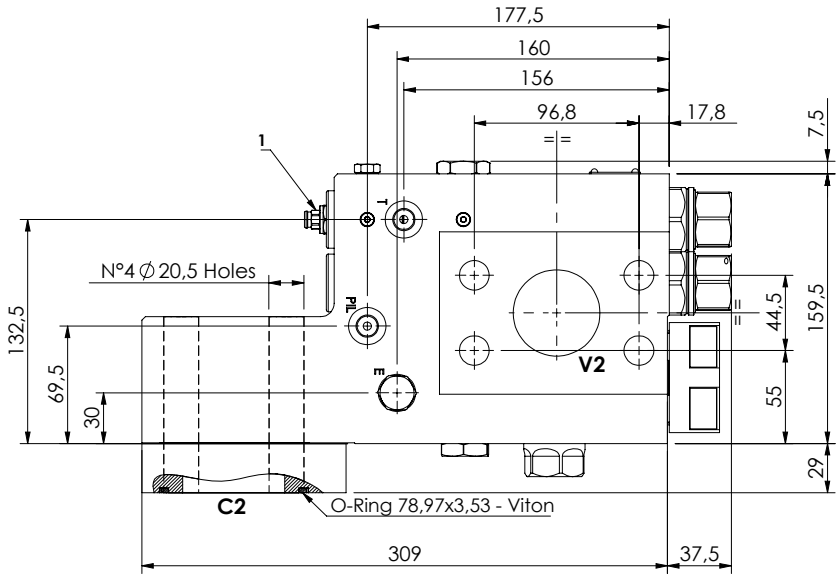

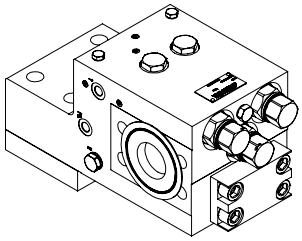

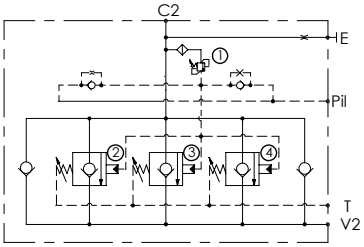

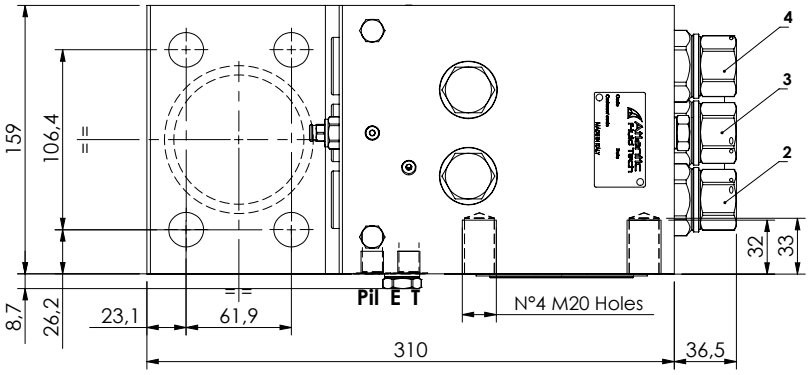

SPECIFICATIONS

Max. operating pressure:	**420 bar**
Rated flow:	**1500 l/min**
Manifold:	**Steel**
Weight:	**47,16 kg**

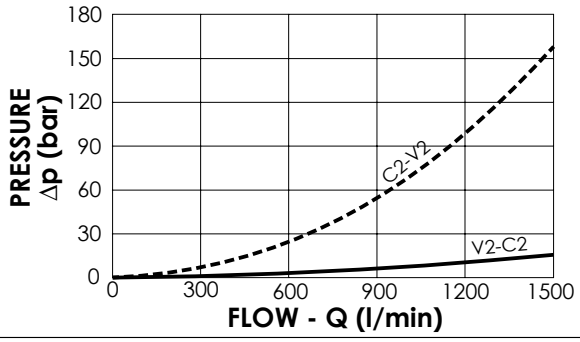

NOTES

When correctly adjusted for the special excavator installation, these valves meet the requirement of ISO 8643

ORDERING CODES

Quick code	Description	Main ports size	Standard setting (bar)	Adjust. range (bar)	Pressure increase (bar/turn)
ML000164	**MLST-1500-AAGR-00-S30-N420**	V2:**2" SAE 6000** C2:**3" SAE 3000** E,Pil,T:**G 1/4"**	① **400 Q=5 l/min** ②④**8.5 Crack. pr.** ③ **7.5 Crack. pr.**	①**150-420** ②③④ **3-15**	① **236** ②③④ **3.4**

CHECK AND METERING VALVE

MLST-1500-AAGL

FLANGED TYPE
3" SAE 3000 / 2" SAE 6000
LEFT VERSION

ATLANTIC Fluid Tech

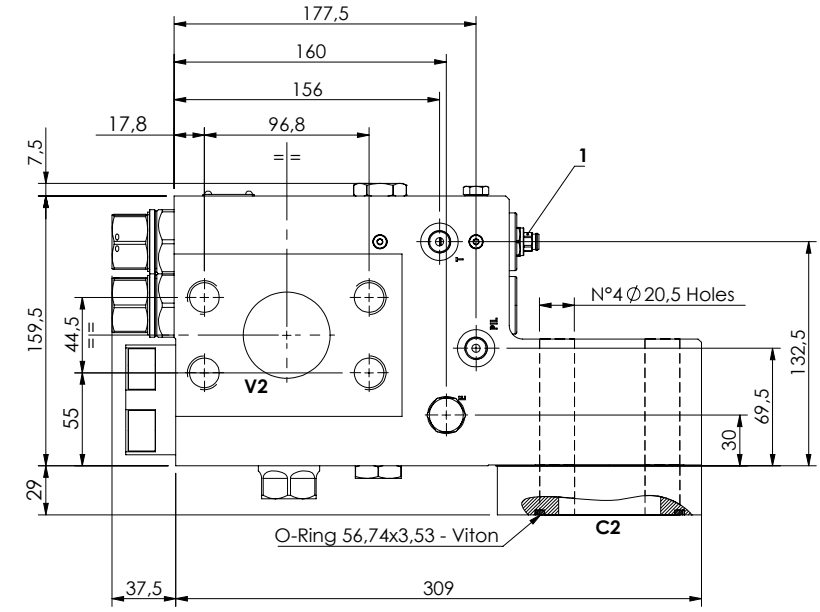

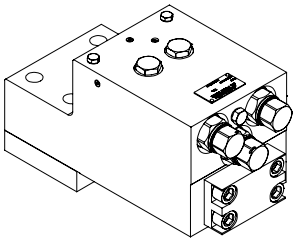

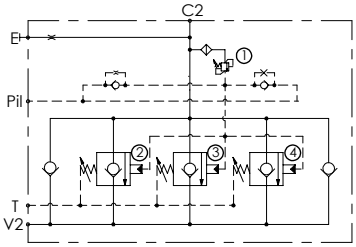

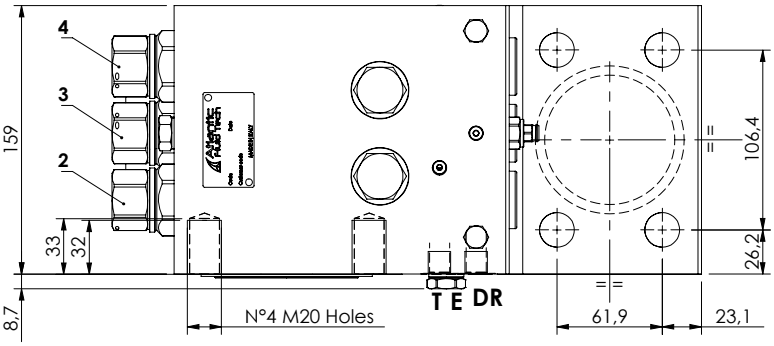

SPECIFICATIONS

Max. operating pressure:	**420 bar**
Rated flow:	**1500 l/min**
Manifold:	**Steel**
Weight:	**47,15 kg**

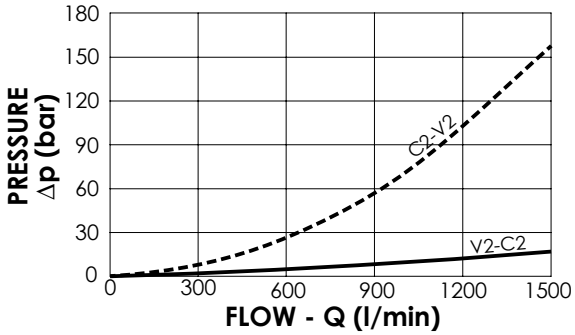

NOTES

When correctly adjusted for the special excavator installation, these valves meet the requirement of ISO 8643

ORDERING CODES

Quick code	Description	Main ports size	Standard setting (bar)	Adjust. range (bar)	Pressure increase (bar/turn)
ML000163	**MLST-1500-AAGL-00-S30-N420**	V2:**2" SAE 6000** C2:**3" SAE 3000** E,Pil,T:**G 1/4"**	①**400 Q=5 l/min** ②④**8.5 Crack. pr.** ③**7.5 Crack. pr.**	① **200-420** ②③④**3-15**	①**236** ②③④**3.4**

CHECK AND METERING VALVE

MLNT-250-AAGN

FLANGE TYPE
3/4" SAE 6000

ATLANTIC Fluid Tech

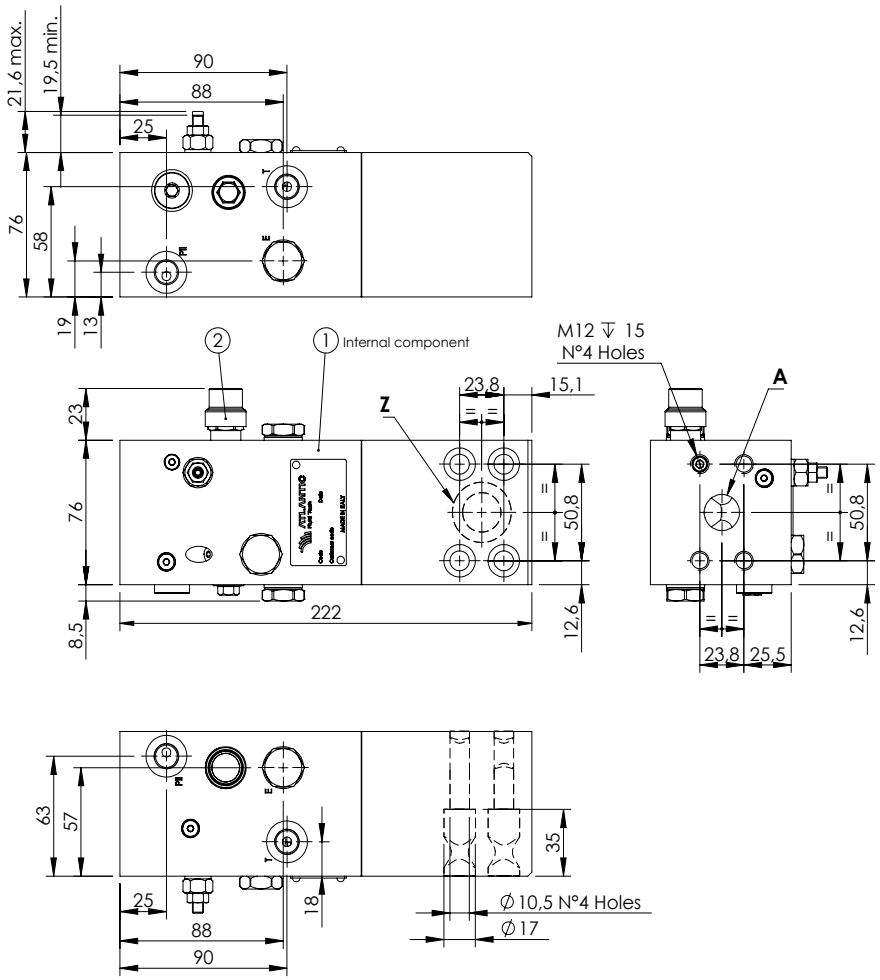

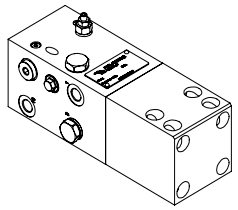

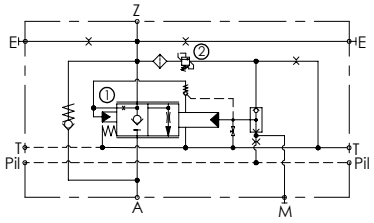

SPECIFICATIONS

Max. operating pressure:	**420 bar**
Rated flow:	**250 l/min**
Manifold:	**Steel**
Weight:	**8,31 kg**

PATENTED

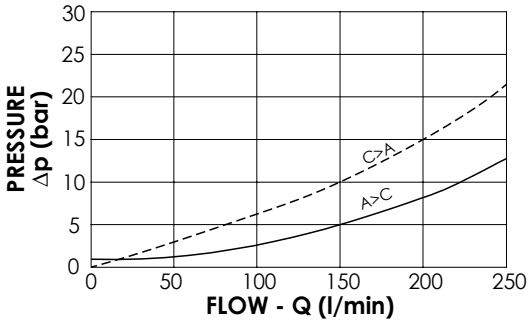

NOTES

When correctly adjusted for the special excavator installation, these valves meet the requirement of ISO 8643

ORDERING CODES

Quick code	Description	Main ports size	Standard setting (bar)	Adjust. range (bar)	Pressure increase (bar/turn)
ML000337	**MLNT-250-AAGN-00-S34-N420**	Z,A: **3/4" SAE 6000** E,T,Pil,M: **G1/4"**	① **5,5 Crack. pr.** ② **420 Q=5 l/min**	① **3 - 10** ② **200 - 420**	① **1,8** ② **236**

CHECK AND METERING VALVE

MLNT-350-AAGN

FLANGE TYPE
1" SAE 6000

ATLANTIC Fluid Tech

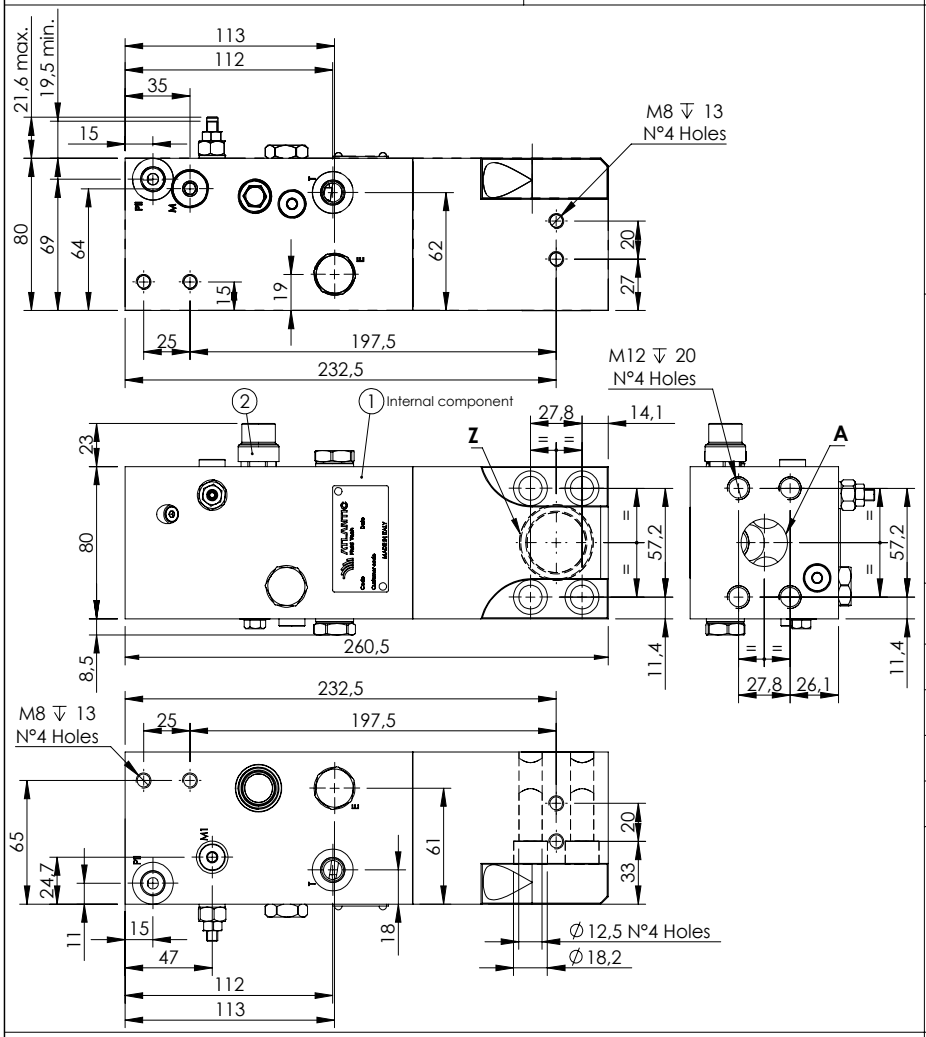

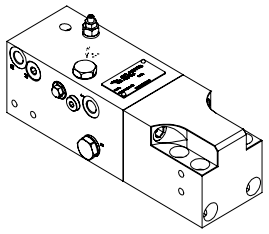

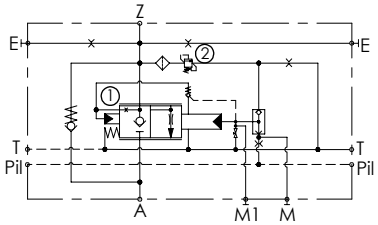

SPECIFICATIONS

Max. operating pressure:	**420 bar**
Rated flow:	**350 l/min**
Manifold:	**Steel**
Weight:	**10,18 kg**

PATENTED

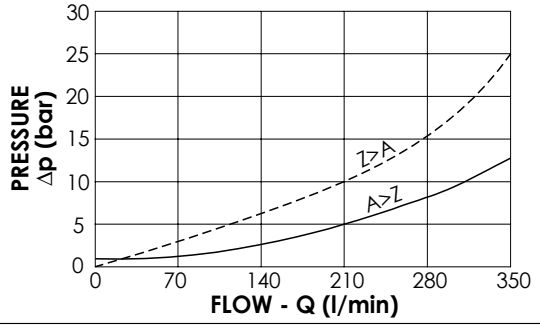

NOTES

When correctly adjusted for the special excavator installation, these valves meet the requirement of ISO 8643

ORDERING CODES

Quick code	Description	Main ports size	Standard setting (bar)	Adjust. range (bar)	Pressure increase (bar/turn)
ML000271	**MLNT-350-AAGN-00-S10-N420**	Z,A: **1" SAE 6000** E,T,Pil,M: **G1/4"** M1: **G1/8"**	① **5,5 Crack. pr.** ② **420 Q=5 l/min**	① **3 - 17** ② **200 - 420**	① **2,4** ② **236**

CHECK AND METERING VALVE

MLNT-500-AAGN

FLANGE TYPE
1"-1/4 SAE 6000

ATLANTIC Fluid Tech

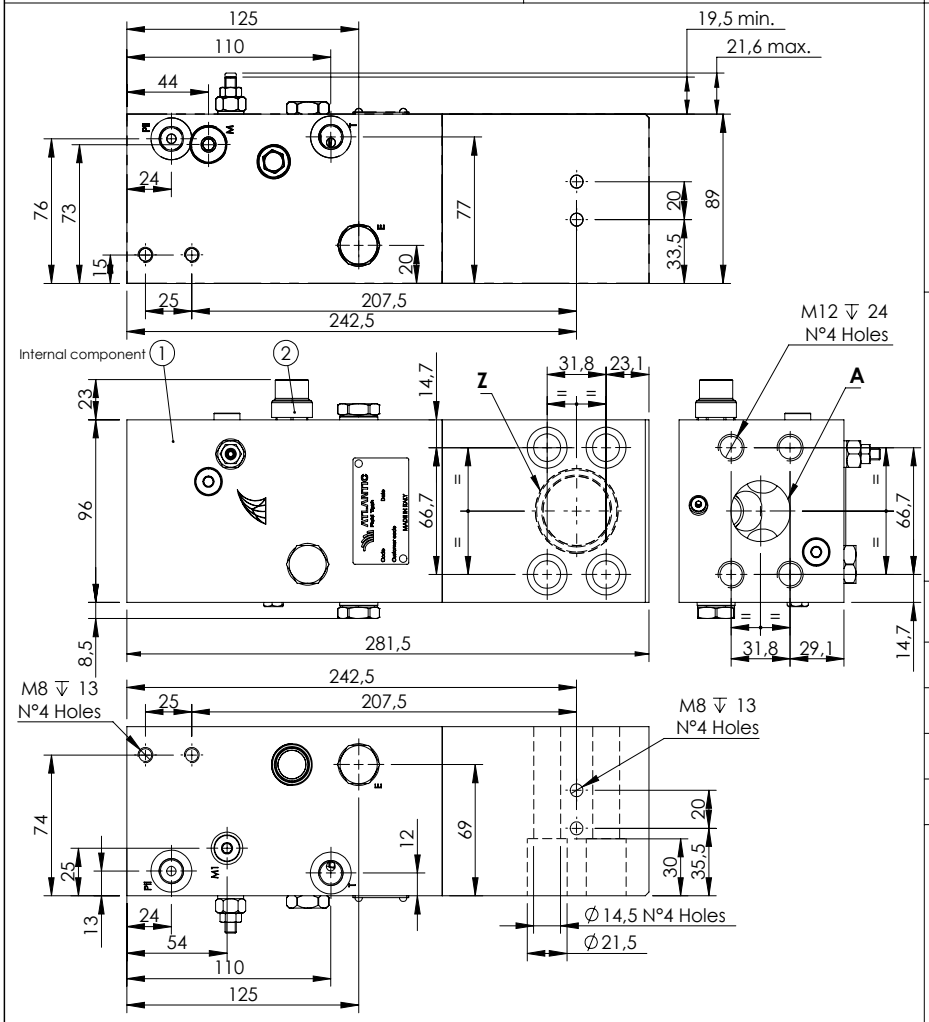

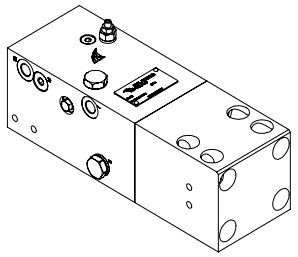

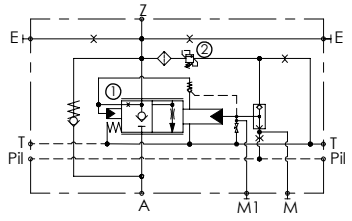

SPECIFICATIONS

Max. operating pressure:	**420 bar**
Rated flow:	**500 l/min**
Manifold:	**Steel**
Weight:	**14,9 kg**

PATENTED

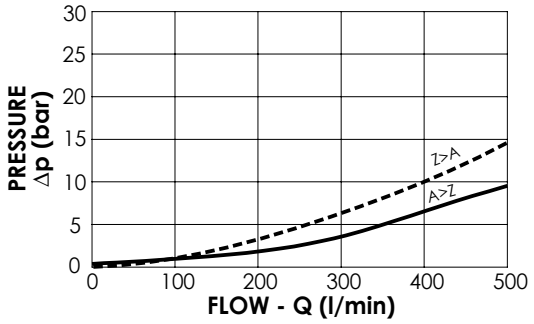

NOTES

When correctly adjusted for the special excavator installation, these valves meet the requirement of ISO 8643

ORDERING CODES

Quick code	Description	Main ports size	Standard setting (bar)	Adjust. range (bar)	Pressure increase (bar/turn)
ML000333	**MLNT-500-AAGN-00-S11-N420**	Z,A: **1"-1/4 SAE 6000** E,T,Pil,M: **G1/4"** M1: **G1/8"**	① **5,5 Crack. pr.** ② **420 Q=5 l/min**	① **2 - 20** ② **200 - 420**	① **2,0** ② **236**

ATLANTIC
Fluid Tech

SECTION 11

Shuttle and Logic Elements

MANAGEMENT SYSTEM CERTIFICATION
DNV·GL
ISO 9001 = ISO 14001
OHSAS 18001

SHUTTLE AND LOGIC ELEMENTS

ATLANTIC Fluid Tech

Hydraulic scheme	Valve description	Valve type	Rated flow (l/min)	Max. pressure (bar)	Installation	Main port size or cavity type	Page
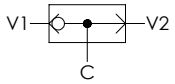	CDSN-005-SSNS	Shuttle	5	350	Insert	VP000018	11.01.**010**
	CDSN-030-SSNS	Shuttle	30	350	Insert	VP000079	11.01.**020**
	MDSN-050-SSNR	Shuttle	50	350	In line	G 1/4"	11.01.**030**
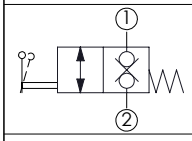	CDML-040-LBVD	Direct acting, manually operated	40	350	Cartridge	VP000338	11.02.**040**
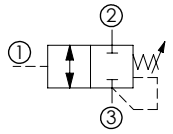	CDLN-040-CCTC	Direct acting, spool type	40	350	Cartridge	SAE-10-3N	11.03.**050**
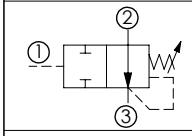	CDLN-040-CCTE	Direct acting, spool type	40	350	Cartridge	SAE-10-3N	11.04.**060**
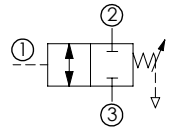	CDLN-040-CCVC	Direct acting, spool type	40	350	Cartridge	SAE-10-3N	11.05.**070**
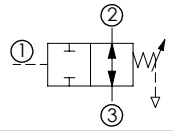	CDLN-040-CCVE	Direct acting, spool type	40	350	Cartridge	SAE-10-3N	11.06.**080**
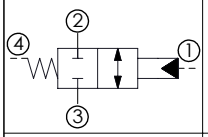	CDLC-150-CCTB	Direct acting, spool type	150	350	Cartridge	SAE-12-4N	11.07.**090**
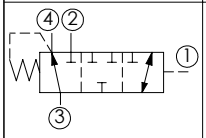	CDLN-040-CDTK	Direct acting, spool type	40	350	Cartridge	SAE-10-4N	11.08.**100**
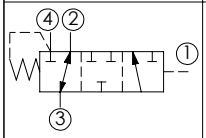	CDLN-040-CDTH	Direct acting, spool type	40	350	Cartridge	SAE-10-4N	11.09.**110**
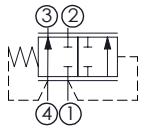	CDLN-040-CDPB	Direct acting, spool type	40	350	Cartridge	SAE-10-4N	11.10.**120**
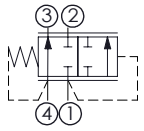	CDLN-120-CDPB	Direct acting, spool type	120	350	Cartridge	SAE-12-4N	11.10.**130**
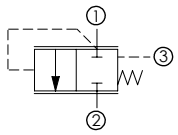	CDLN-100-SCPC	Normally closed, spool type	100	350	Cartridge	VP000198	11.11.**140**
	CDLN-100-SCPC	Normally closed, spool type, adjustable setting	100	350	Cartridge	VP000198	11.11.**150**
	CDLN-160-SCTC	Normally closed, spool type	160	350	Cartridge	VP000065	11.11.**160**
	CDLN-300-SCTC	Normally closed, spool type	300	350	Cartridge	VP000058	11.11.**170**
	CDLN-500-SCTC	Normally closed, spool type	500	350	Cartridge	VP000178	11.11.**180**

SHUTTLE AND LOGIC ELEMENTS

ATLANTIC Fluid Tech

Hydraulic scheme	Valve description	Valve type	Rated flow (l/min)	Max. pressure (bar)	Installation	Main port size or cavity type	Page
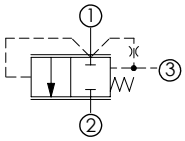	CDLN-100-SCPD	Normally closed, spool type with internal orifice	100	350	Cartridge	VP000198	11.12.**190**
	CDLN-160-SCTD	Normally closed, spool type with internal orifice	160	350	Cartridge	VP000065	11.12.**200**
	CDLN-300-SCTD	Normally closed, spool type with internal orifice	300	350	Cartridge	VP000058	11.12.**210**
	CDLN-500-SCTD	Normally closed, spool type with internal orifice	500	350	Cartridge	VP000178	11.12.**220**
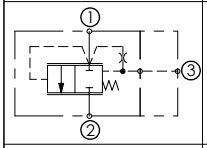	CDLN-500-PCPS	Normally closed, poppet type, externally piloted	500	350	Cartridge	VP000189	11.13.**230**
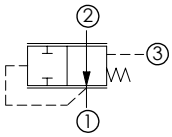	CDLN-060-SCPR	Normally open, spool type	60	350	Cartridge	VP000198	11.14.**240**
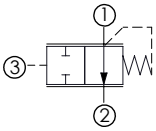	CDLN-100-SBPE	Normally open, spool type	100	350	Cartridge	VP000330	11.15.**250**
	CDLN-200-SBPE	Normally open, spool type	200	350	Cartridge	VP000204	11.15.**260**
	CDLN-380-SBPE	Normally open, spool type	380	350	Cartridge	VP000330	11.15.**270**
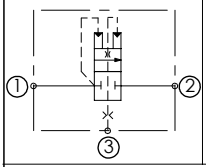	CDLN-160-SCTS	Normally closed, spool type, kick down type	160	350	Cartridge	VP000065	11.16.**280**

SHUTTLE VALVE

CDSN-005-SSNS

INSERT TYPE

ATLANTIC Fluid Tech

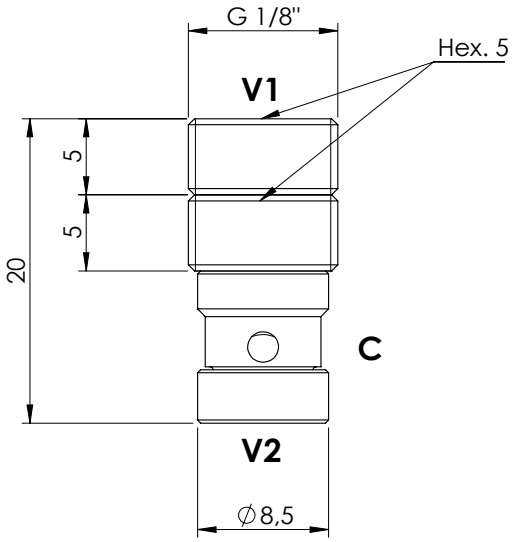

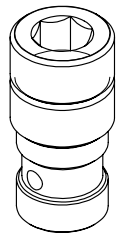

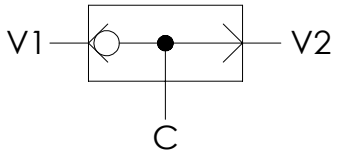

SPECIFICATIONS

Max. operating pressure:	350 bar
Rated flow:	5 l/min
Cavity:	VP000018
Weight:	0,01 kg

NOTES

Installation torque:	12-15 Nm

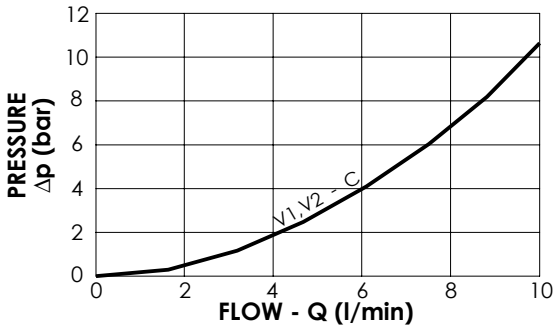

ORDERING CODES

Quick code	Description	
CD000001	CDSN-005-SSNS-FN-018-N000	

SHUTTLE VALVE

CDSN-030-SSNS

INSERT TYPE

ATLANTIC Fluid Tech

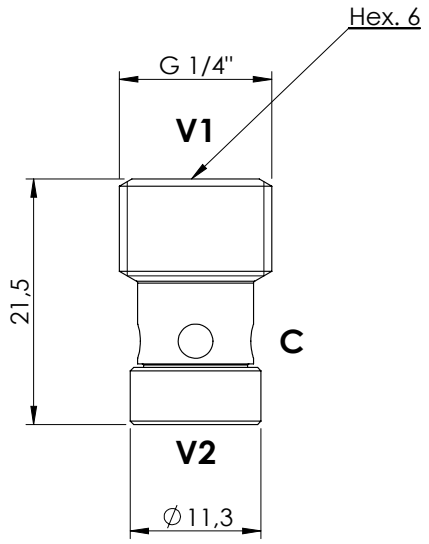

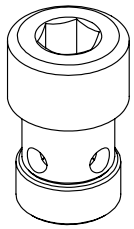

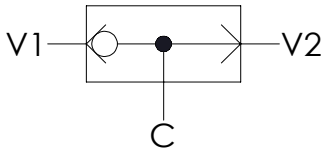

SPECIFICATIONS

Max. operating pressure:	350 bar
Rated flow:	30 l/min
Cavity:	VP000079
Weight:	0,01 kg

NOTES

Installation torque:	14 - 16 Nm

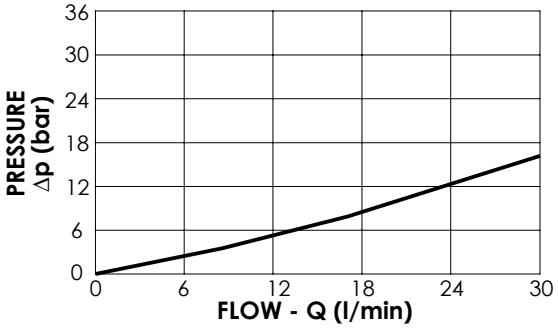

ORDERING CODES

Quick code	Description	
CD000045	CDSN-030-SSNS-FN-079-N000	

SHUTTLE VALVE

MDSN-050-SSNR

IN LINE TYPE

ATLANTIC Fluid Tech

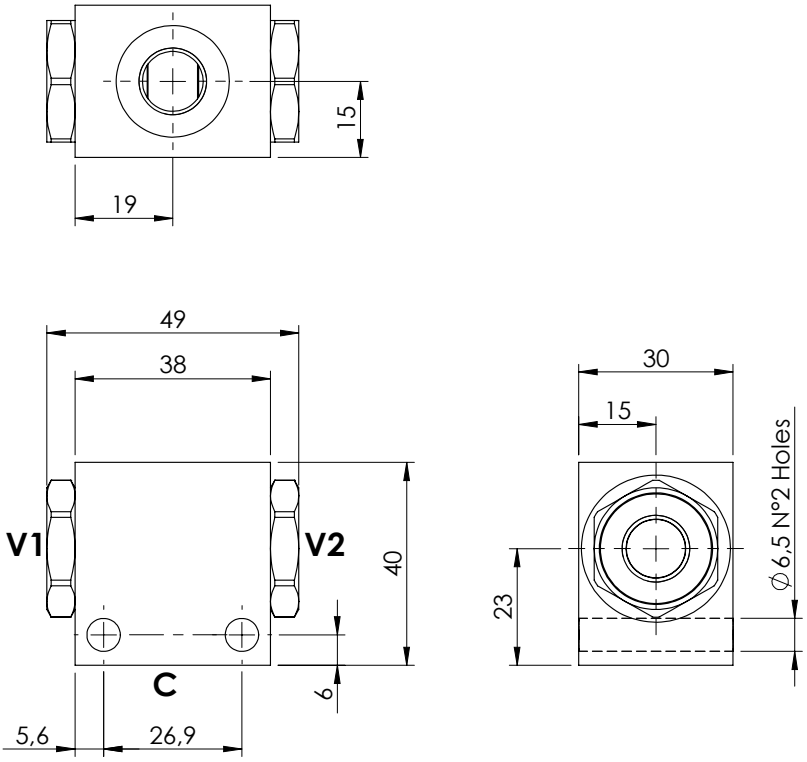

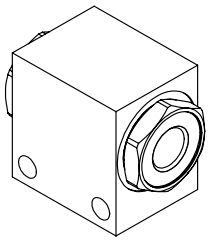

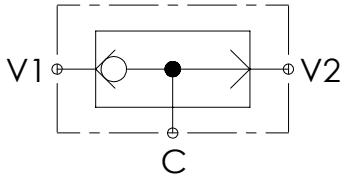

SPECIFICATIONS

Max. operating pressure:	350 bar
Rated flow:	50 l/min
Manifold:	Aluminium
Weight:	0,16 kg

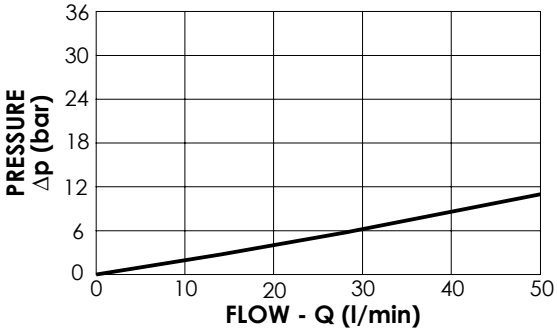

ORDERING CODES

Quick code	Description	Main ports size	
MD000001	MDSN-050-SSNR-NP-G14-N350	G 1/4"	

CARTRIDGE SEAT VALVE

CDML-040-LBVD

BIDIRECTIONAL SEAT-VALVE SHUT-OFF
DIRECT ACTING
MANUALLY OPERATED

ATLANTIC Fluid Tech

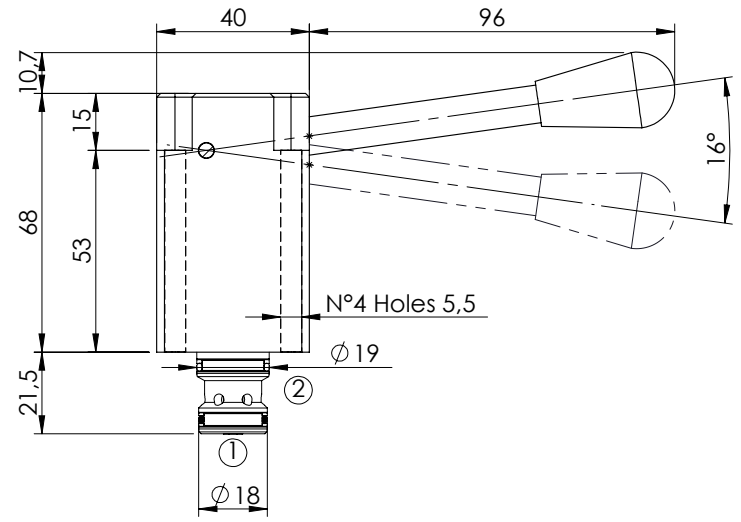

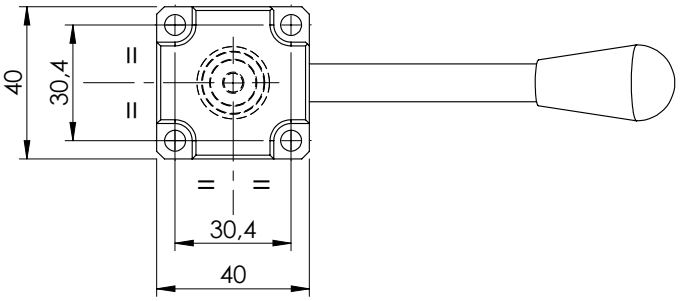

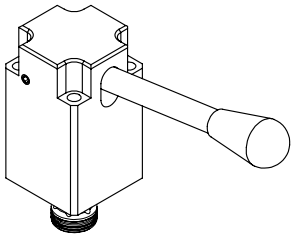

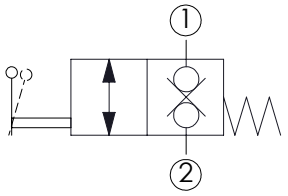

SPECIFICATIONS

Max. operating pressure:	**350 bar**
Rated flow:	**40 l/min**
Manifold:	**Steel**
Weight:	**0,8 kg**
Seal kit:	**RD700338**

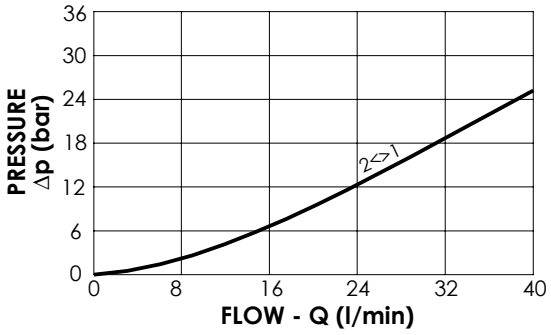

NOTES

To be mounted with M5 x 60 bolt
Installation torque: 5 Nm

ORDERING CODES

Quick code	Description	Cavity	
CD000234	**CDML-040-LBVD-00-338-N350**	**VP000338**	

LOGIC ELEMENT

CDLN-040-CCTC

DIRECT ACTING SPOOL TYPE

ATLANTIC Fluid Tech

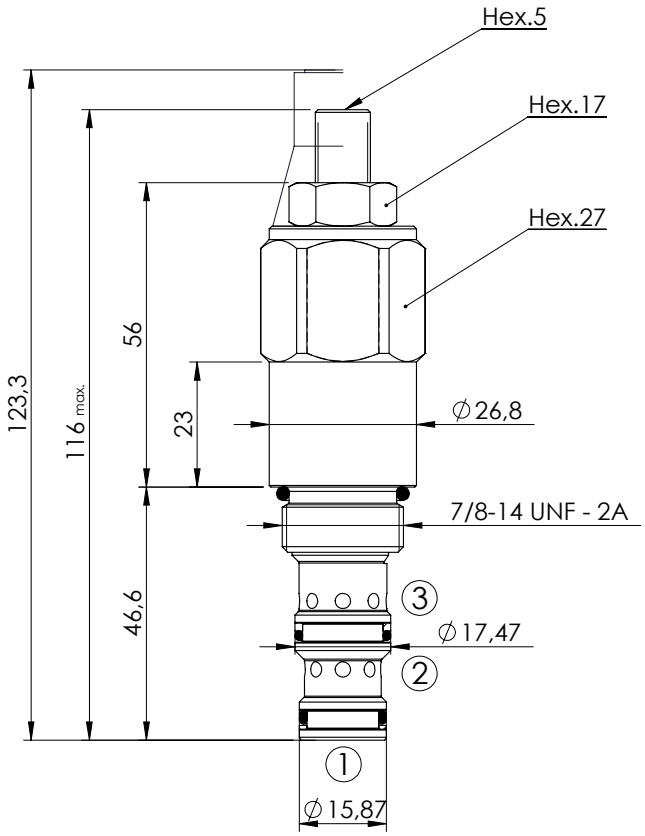

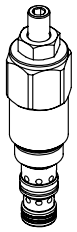

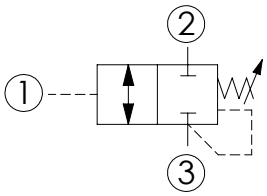

SPECIFICATIONS

Max. operating pressure:	350 bar
Rated flow:	40 l/min
Cavity:	SAE-10-3N
Weight:	0,29 kg
Installation torque:	55 - 62 Nm
Seal kit:	RB700092

SEALING CAP

Ordering code:
AT000022

OPTIONS

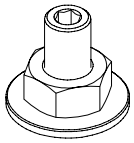

Adjustment with Screw

Pressure in port 3 is additive to setting 1:1. For back pressure compensated valve consult CDLN-040-CCVC data sheet. No O-ring on 1

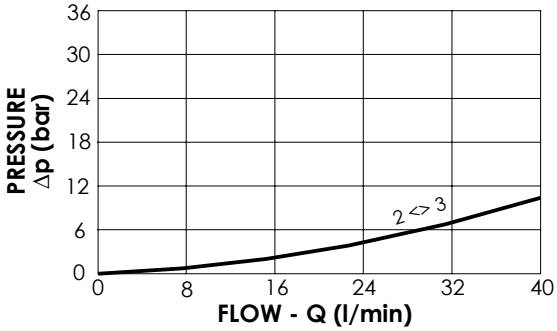

ORDERING CODES

Quick code	Description	Standard setting (bar, Q=5 l/min)	Adjust. range (bar)	Pressure increase (bar/turn)	Options
CD000121	CDLN-040-CCTC-S10-N060	30	10-60	11	Adjustment with Screw

LOGIC ELEMENT

CDLN-040-CCTE

DIRECT ACTING SPOOL TYPE

ATLANTIC Fluid Tech

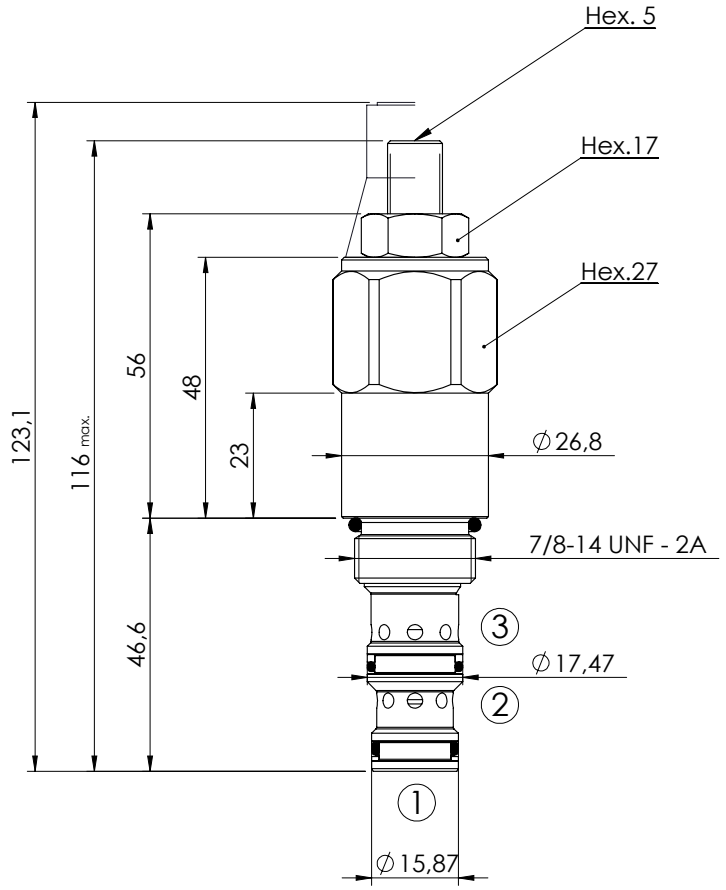

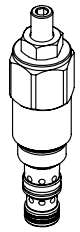

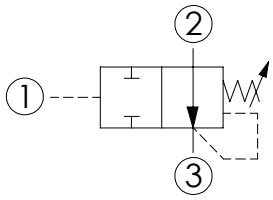

Pressure in port 3 is additive to setting 1:1. For back pressure compensated valve consult CDLN-040-CCVE data sheet. No O-ring on 1

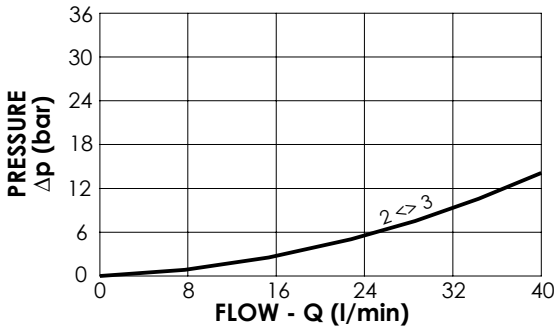

SPECIFICATIONS

Max. operating pressure:	350 bar
Rated flow:	40 l/min
Cavity:	SAE-10-3N
Weight:	0,29 kg
Installation torque:	55 - 62 Nm
Seal kit:	RB700092

SEALING CAP

Ordering code:

AT000022

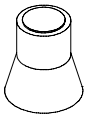

OPTIONS

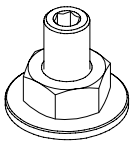

Adjustment with Screw

ORDERING CODES

Quick code	Description	Standard setting (bar, Q=5 l/min)	Adjust. range (bar)	Pressure increase (bar/turn)	Options
CD000123	CDLN-040-CCTE-HN-S10-N060	30	10-60	11	Adjustment with Screw

LOGIC ELEMENT

CDLN-040-CCVC

SPOOL TYPE - VENTED EXTERNAL PILOT

ATLANTIC Fluid Tech

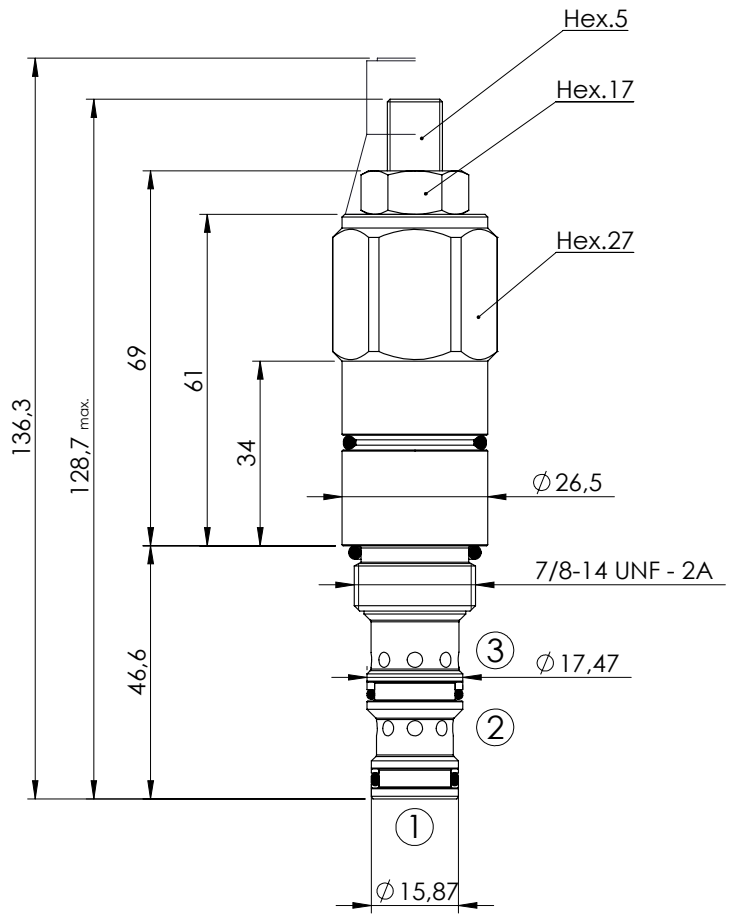

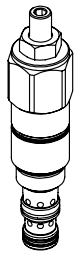

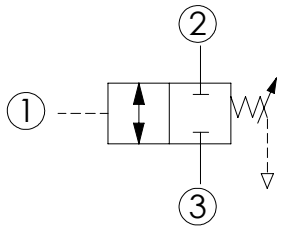

SPECIFICATIONS

Max. operating pressure:	350 bar
Rated flow:	40 l/min
Cavity:	SAE-10-3N
Weight:	0,33 kg
Installation torque:	60 - 75 Nm
Seal kit:	RB700092

SEALING CAP

Ordering code:

AT000022

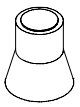

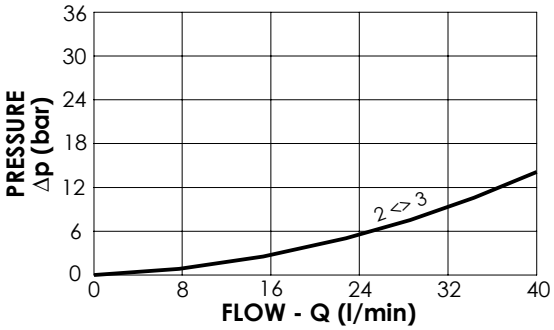

OPTIONS

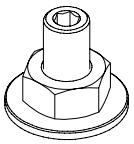

Adjustment with Screw

ORDERING CODES

Quick code	Description	Standard setting (bar, Q=5 l/min)	Adjust. range (bar)	Pressure increase (bar/turn)	Options
CD000119	CDLN-040-CCVC-HN-S10-N180	120	20-180	22	Adjustment with Screw
CD000120	CDLN-040-CCVC-HN-S10-N100	50	10-100	10	Adjustment with Screw

LOGIC ELEMENT

CDLN-040-CCVE

SPOOL TYPE - VENTED EXTERNAL PILOT

ATLANTIC Fluid Tech

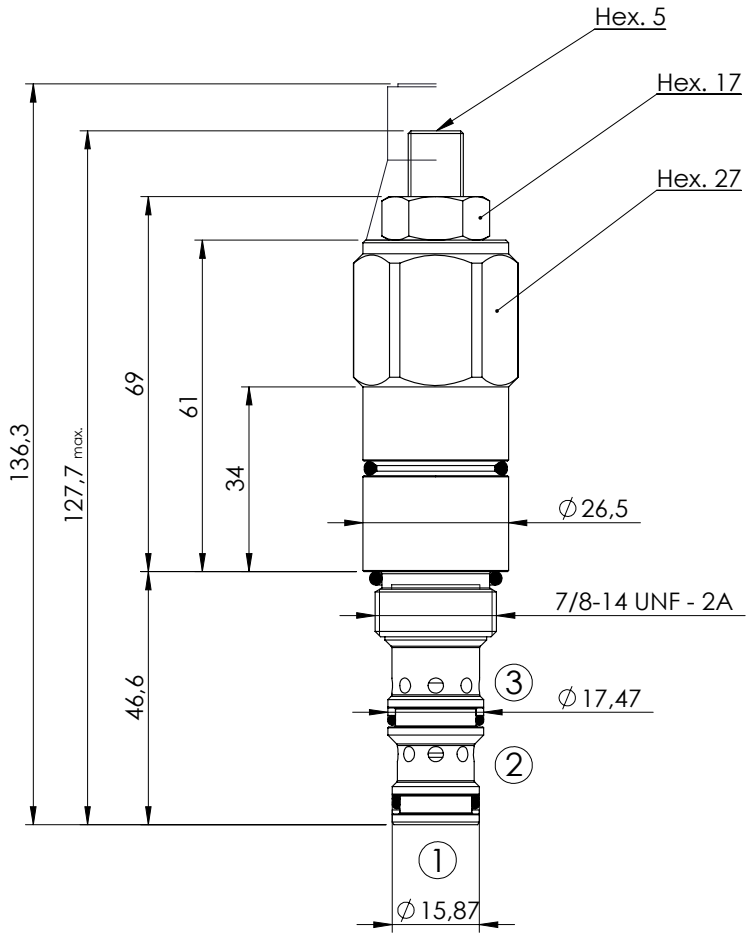

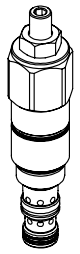

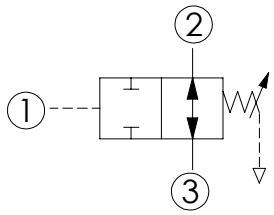

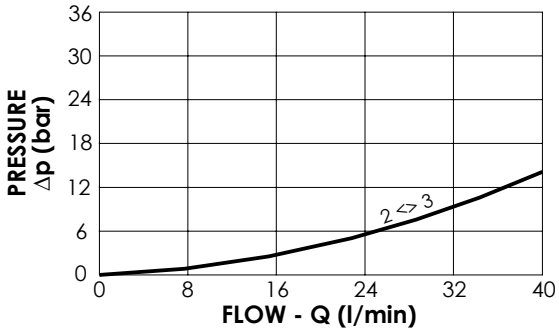

SPECIFICATIONS

Max. operating pressure:	350 bar
Rated flow:	40 l/min
Cavity:	SAE-10-3N
Weight:	0,33 kg
Installation torque:	55 - 62 Nm
Seal kit:	RB700092

SEALING CAP

Ordering code:
AT000021

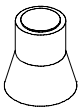

OPTIONS

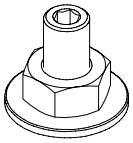

Adjustment with Screw

ORDERING CODES

Quick code	Description	Standard setting (bar, Q=5 l/min)	Adjust. range (bar)	Pressure increase (bar/turn)	Options
CD000122	CDLN-040-CCVE-HN-S10-N180	120	20-180	22	Adjustment with Screw
CD000214	CDLN-040-CCVE-HN-S10-N100	50	10-100	10	Adjustment with Screw

LOGIC ELEMENTS

CDLC-150-CCTB

DIRECT ACTING SPOOL TYPE

ATLANTIC Fluid Tech

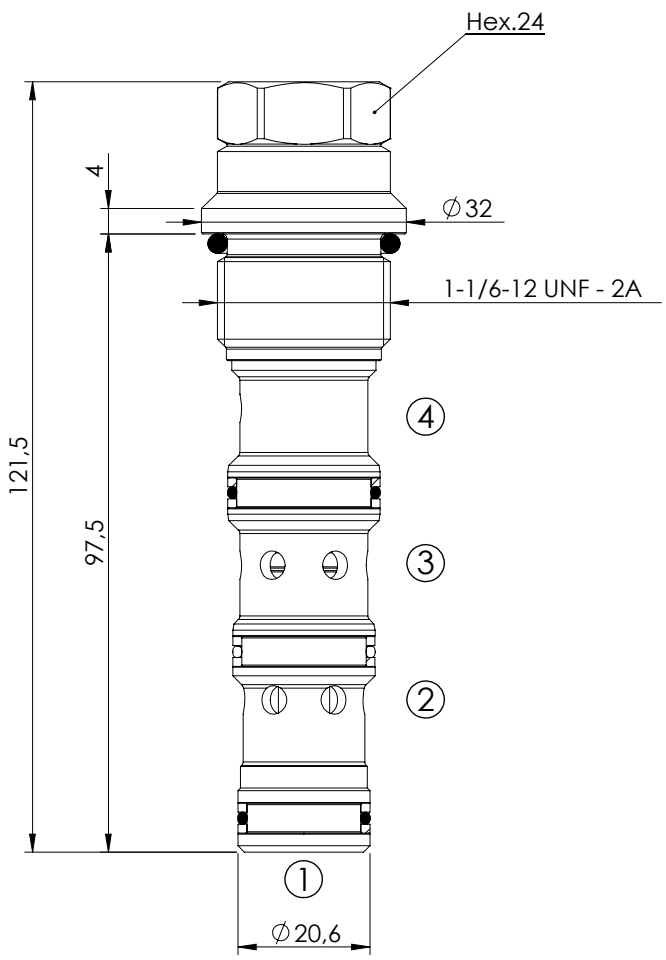

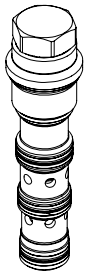

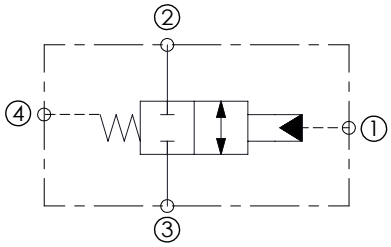

SPECIFICATIONS

Max. operating pressure:	450 bar
Rated flow:	150 l/min
Cavity:	SAE-12-4N
Weight:	0,33 kg

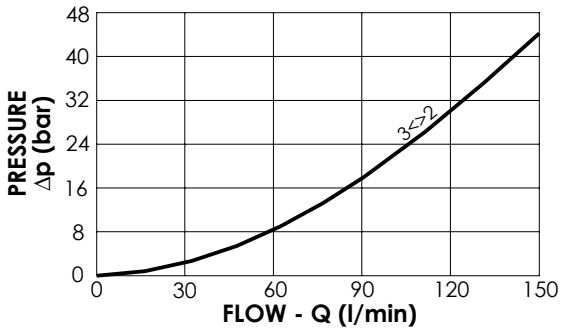

NOTES

Installation torque:	110 - 120 Nm
Seal kit:	RB700103

ORDERING CODES

Quick code	Description	Cracking pressure (bar)	
CD000105	CDLC-150-CCTB-FN-S12-N007	7,5 (0/+2)	

LOGIC ELEMENT

CDLN-040-CDTK

DIRECT ACTING SPOOL TYPE

ATLANTIC Fluid Tech

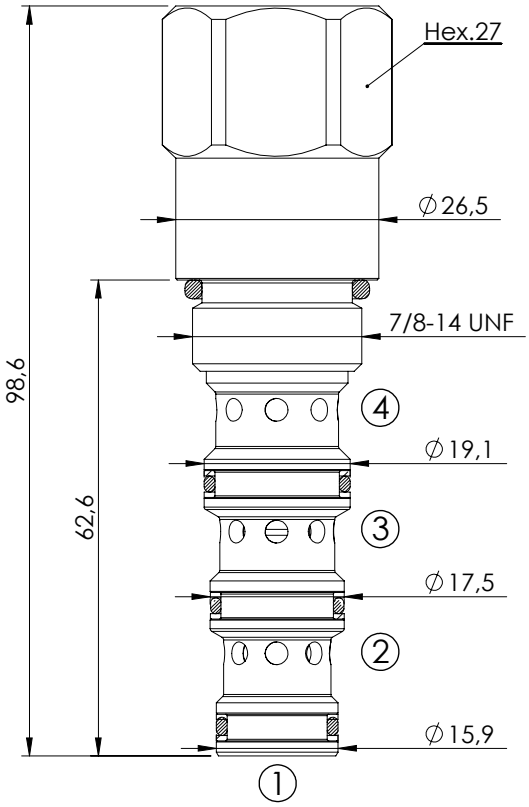

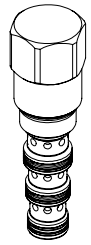

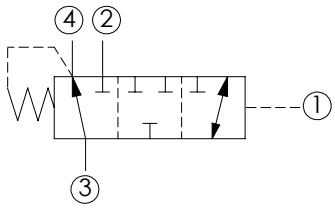

SPECIFICATIONS

Max. operating pressure:	350 bar
Rated flow:	40 l/min
Cavity:	SAE-10-4N
Weight:	0,23 kg
Internal leakage:	50 cc/min

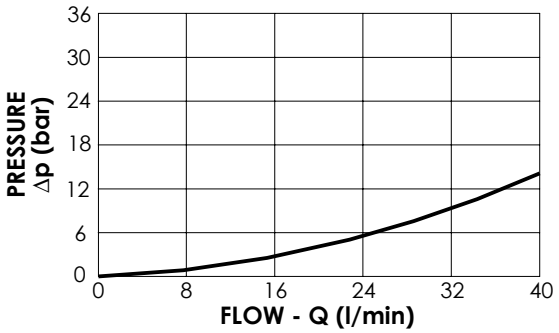

NOTES

Installation torque:	55 - 62 Nm
Seal kit:	RB700102

ORDERING CODES

Quick code	Description	Standard setting (bar,Q=5 l/min)	
CD000300	CDLN-040-CDTK-FN-S10-N003	3 (±1)	
CD000487	CDLN-040-CDTK-FN-S10-N005	5(±1)	
CD000260	CDLN-040-CDTK-FN-S10-N011	11(±1)	

LOGIC ELEMENT

CDLN-040-CDTH

DIRECT ACTING SPOOL TYPE

ATLANTIC Fluid Tech

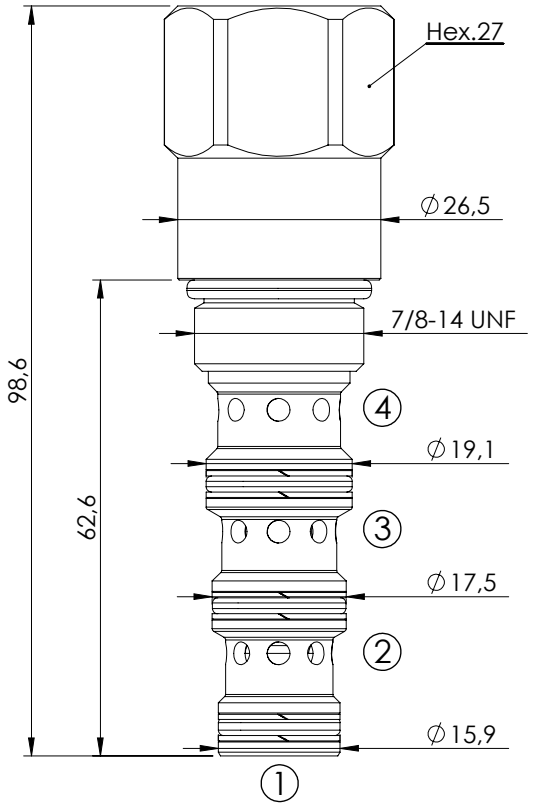

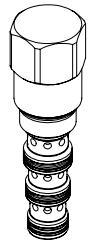

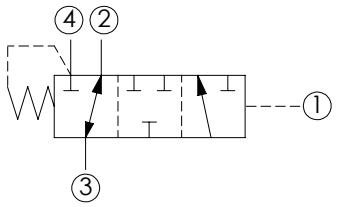

SPECIFICATIONS

Max. operating pressure:	350 bar
Rated flow:	40 l/min
Cavity:	SAE-10-4N
Weight:	0,23 kg
Internal leakage:	50 cc/min

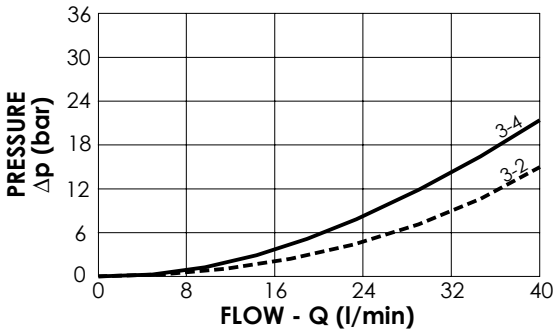

NOTES

Installation torque:	55 - 62 Nm
Seal kit:	RB700102

ORDERING CODES

Quick code	Description	Standard setting (bar,Q=5 l/min)	
CD000377	CDLN-040-CDTH-FN-S10-N003	3 (±1)	
CD000261	CDLN-040-CDTH-FN-S10-N011	11 (±1)	
CD000343	CDLN-040-CDTH-FH-S10-N015	15 (±1)	
CD000276	CDLN-040-CDTH-FH-S10-N030	30 (±1)	
CD000262	CDLN-040-CDTH-FH-S10-N050	50 (±1)	

LOGIC ELEMENT

CDLN-040-CDPB

DIRECT ACTING SPOOL TYPE

ATLANTIC Fluid Tech

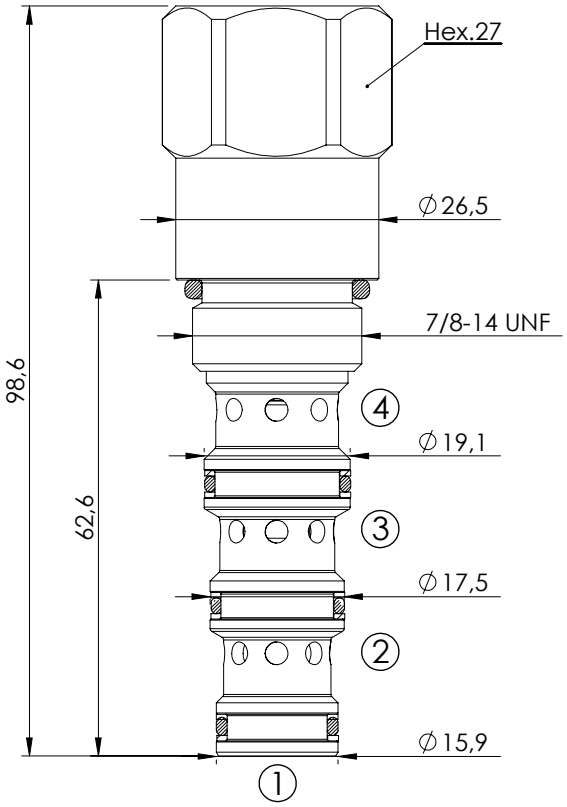

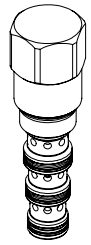

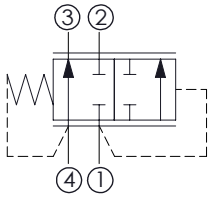

SPECIFICATIONS

Max. operating pressure:	350 bar
Rated flow:	40 l/min
Cavity:	SAE-10-4N
Weight:	0,23 kg
Internal leakage:	50 cc/min

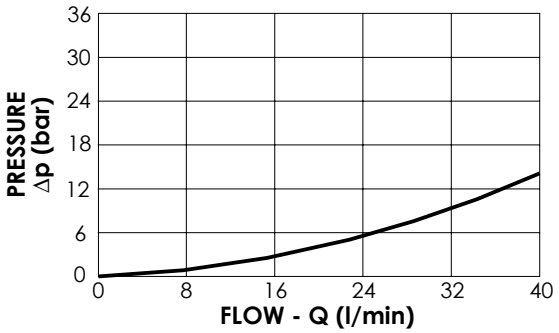

NOTES

Installation torque:	55 - 62 Nm
Seal kit:	RB700102

ORDERING CODES

Quick code	Description	Standard setting (bar,Q=5 l/min)	
CD000295	CDLN-040-CDPB-FH-S10-N005	5 (±0,5)	
CD000296	CDLN-040-CDPB-FH-S10-N011	11,5 (±0,5)	

LOGIC ELEMENTS

CDLN-120-CDPB

DIREC ACTING SPOOL TYPE

ATLANTIC Fluid Tech

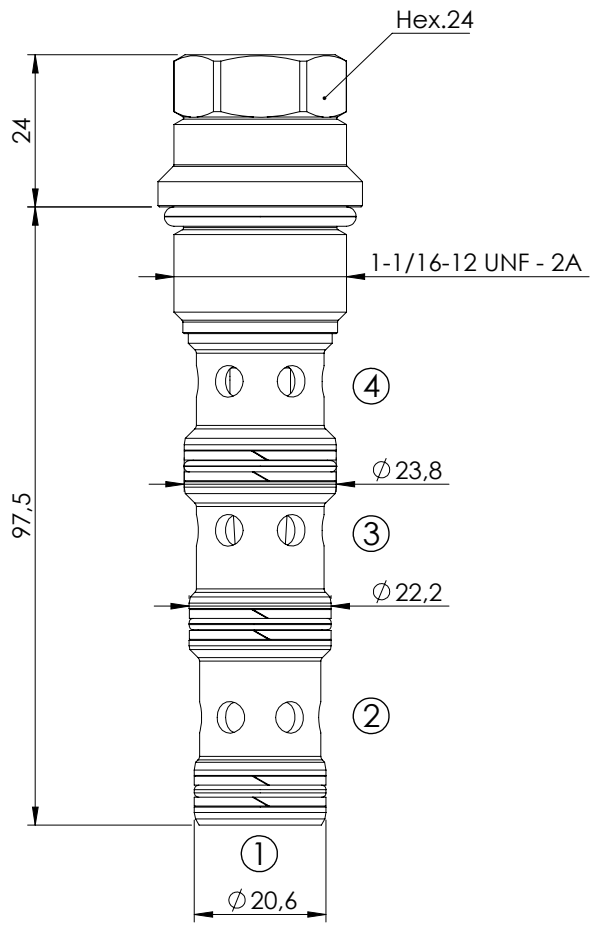

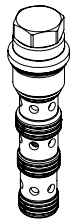

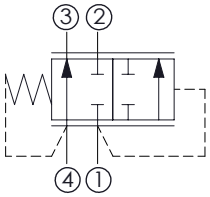

SPECIFICATIONS

Max. operating pressure:	350 bar
Rated flow:	120 l/min
Cavity:	SAE-12-4N
Weight:	0,31 kg

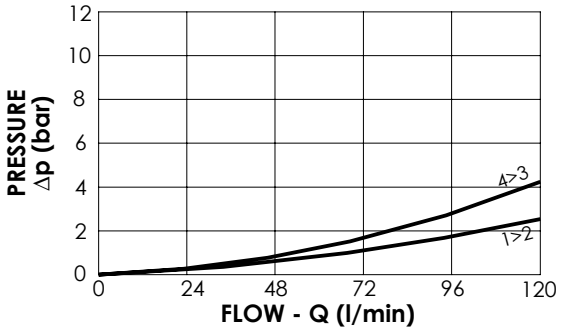

NOTES

Installation torque:	110 - 120 Nm
Seal kit:	RB700103

ORDERING CODES

Quick code	Description	Cracking pressure (bar)	
CD000336	CDLN-120-CDPB-FH-S12-N010	10	

LOGIC ELEMENT

CDLN-100-SCPC

NORMALLY CLOSED SPOOL TYPE

ATLANTIC Fluid Tech

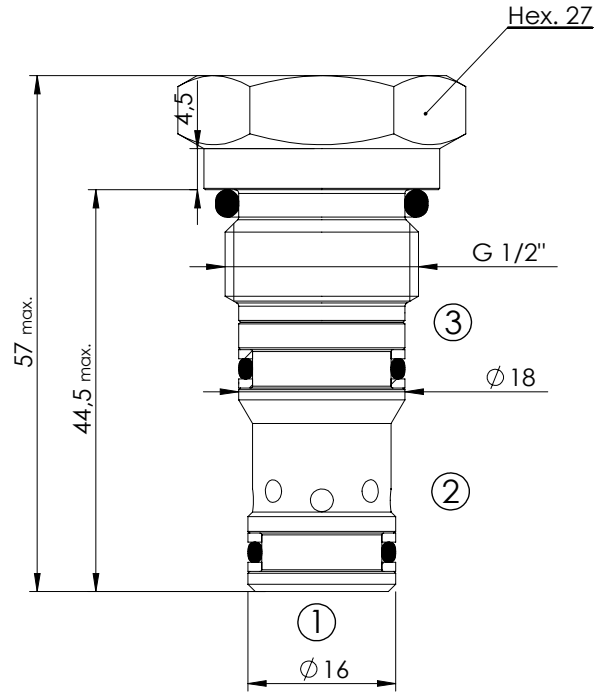

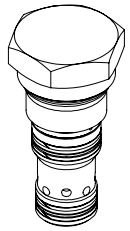

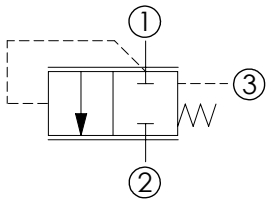

SPECIFICATIONS

Max. operating pressure:	350 bar
Rated flow:	100 l/min
Cavity:	VP000198
Weight:	0,12 kg
Spool:	Ø10 mm

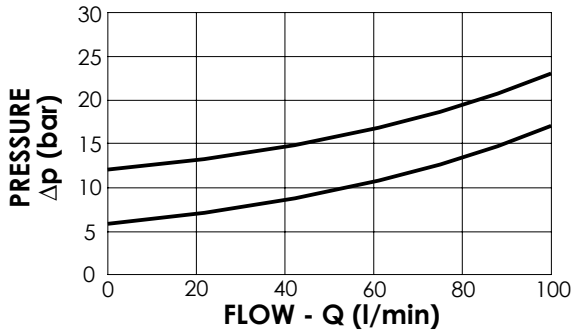

NOTES

Installation torque:	75 - 85 Nm
Seal kit:	RD700198
Parts in body compensator	

ORDERING CODES

Quick code	Description	Cracking pressure (bar)	
CD000073	CDLN-100-SCPC-14-198-N006	6	
CD000103	CDLN-100-SCPC-14-198-N012	12	

LOGIC ELEMENT

CDLN-100-SCPC

NORMALLY CLOSED
SPOOL TYPE
ADJUSTABLE SETTING

ATLANTIC Fluid Tech

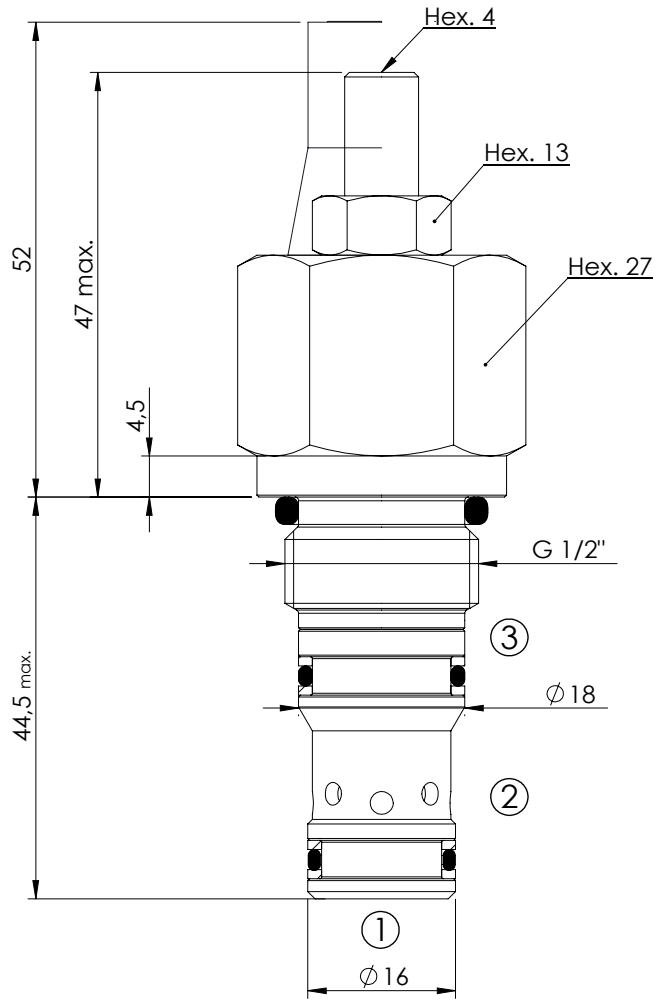

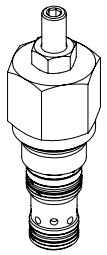

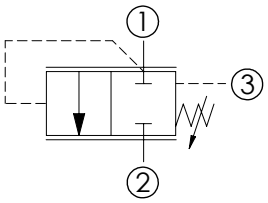

SPECIFICATIONS

Max. operating pressure:	350 bar
Rated flow:	100 l/min
Cavity:	VP000198
Weight:	0,2 kg
Spool:	Ø10 mm

SEALING CAP

Ordering code:
AT000020

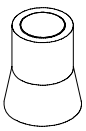

NOTES

Installation torque:	75 - 85 Nm
Seal kit:	RD700198
Parts in body compensator	

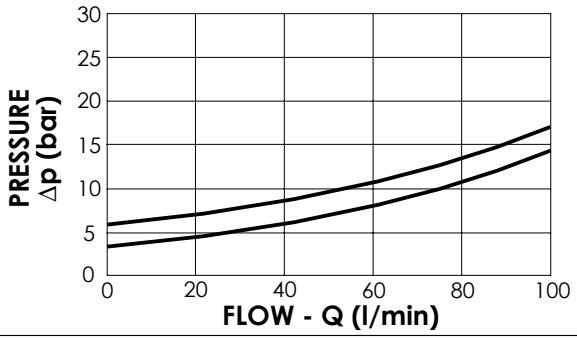

ORDERING CODES

Quick code	Description	Setting range (bar)	
CD000358	CDLN-100-SCPC-01-198-H020	10 - 20	

LOGIC ELEMENT

CDLN-160-SCTC

NORMALLY CLOSED SPOOL TYPE

ATLANTIC Fluid Tech

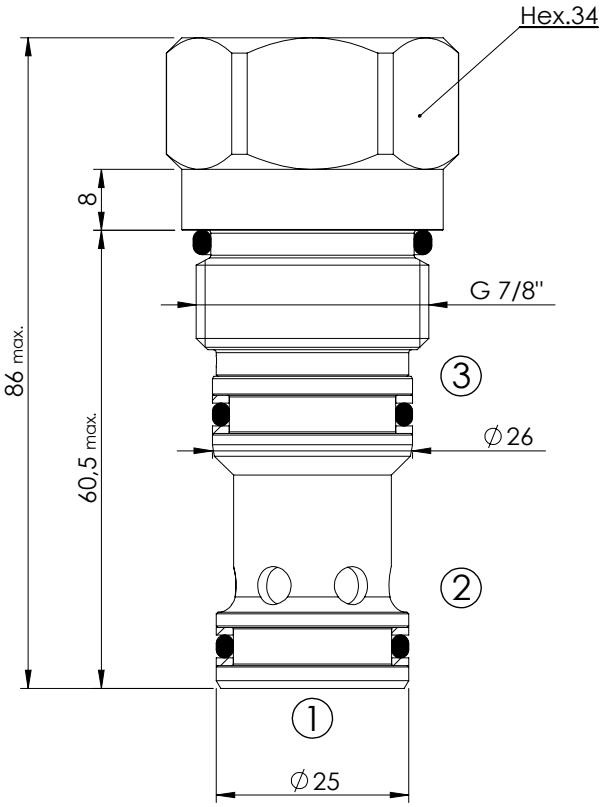

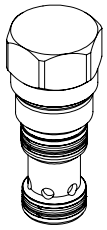

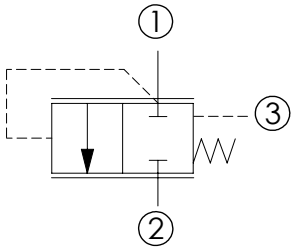

SPECIFICATIONS

Max. operating pressure:	350 bar
Rated flow:	160 l/min
Cavity:	VP000065
Weight:	0,33 kg
Spool:	Ø16 mm

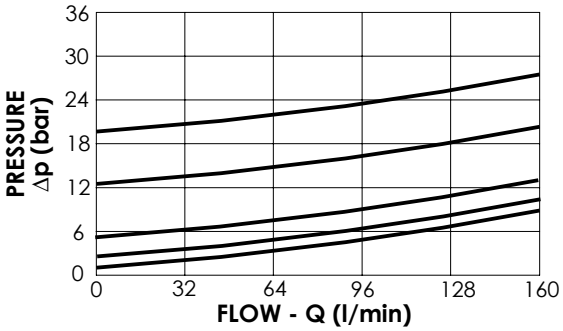

NOTES

Installation torque:	135-145 Nm
Seal kit:	RD900065
Parts in body compensator	

ORDERING CODES

Quick code	Description	Cracking pressure (bar)	
CD000158	CDLN-160-SCTC-14-065-N000	0,4	
CD000076	CDLN-160-SCTC-14-065-N002	2	
CD000051	CDLN-160-SCTC-14-065-N005	5,5	
CD000147	CDLN-160-SCTC-14-065-N012	12,5	
CD000248	CDLN-160-SCTC-14-065-N020	20,5	

LOGIC ELEMENT

CDLN-300-SCTC

NORMALLY CLOSED SPOOL TYPE

ATLANTIC Fluid Tech

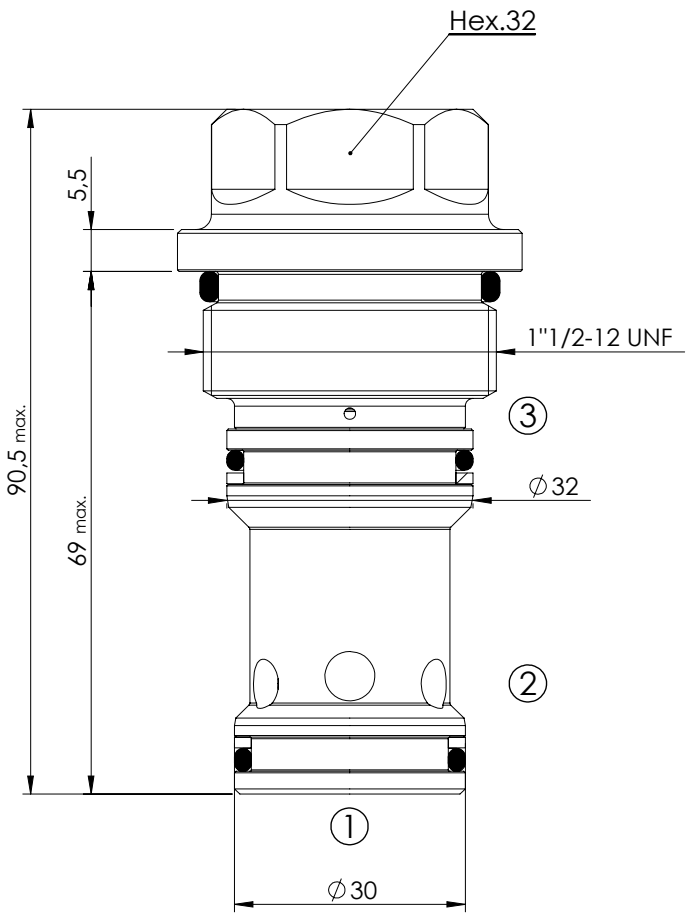

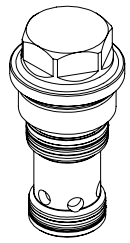

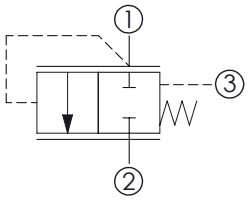

SPECIFICATIONS

Max. operating pressure:	350 bar
Rated flow:	300 l/min
Cavity:	VP000058
Weight:	0,57 kg
Spool:	Ø19 mm

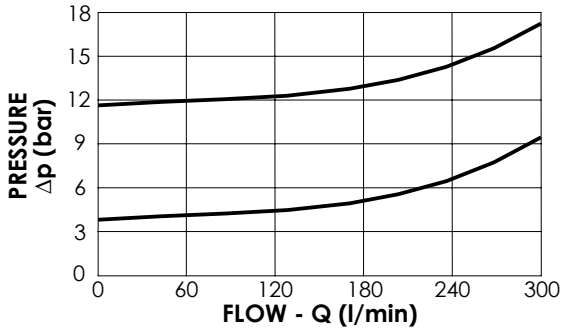

NOTES

Installation torque:	280-300 Nm
Seal kit:	RC700058
Parts in body compensator	

ORDERING CODES

Quick code	Description	Cracking pressure (bar)	
CD000096	CDLN-300-SCTC-14-058-N004	4	
CD000311	CDLN-300-SCTC-14-058-N012	11,5	

LOGIC ELEMENT

CDLN-500-SCTC

NORMALLY CLOSED SPOOL TYPE

ATLANTIC Fluid Tech

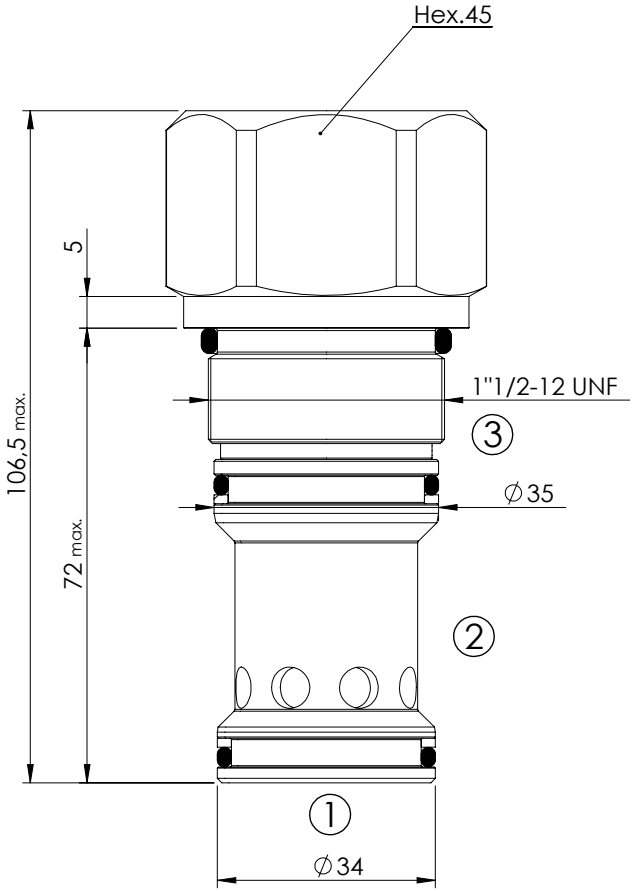

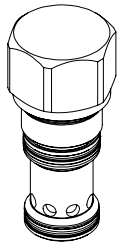

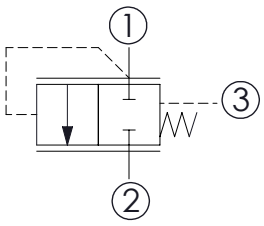

SPECIFICATIONS

Max. operating pressure:	350 bar
Rated flow:	500 l/min
Cavity:	VP000178
Weight:	0,75 kg
Spool:	Ø22 mm

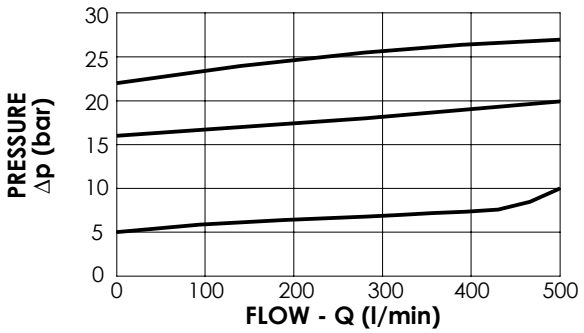

NOTES

Installation torque:	280-300 Nm
Seal kit:	RC700178
Parts in body compensator	

ORDERING CODES

Quick code	Description	Cracking pressure (bar)	
CD000053	CDLN-500-SCTC-14-178-N005	5	
CD000255	CDLN-500-SCTC-14-178-N017	17	
CD000308	CDLN-500-SCTC-14-178-N023	23	

LOGIC ELEMENT

CDLN-100-SCPD

NORMALLY CLOSED SPOOL TYPE WITH INTERNAL ORIFICE

ATLANTIC Fluid Tech

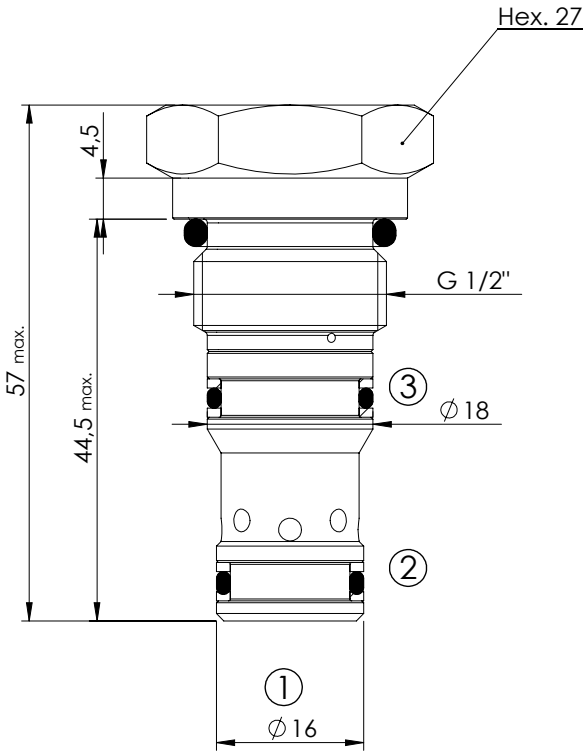

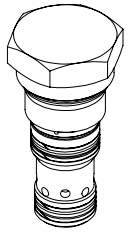

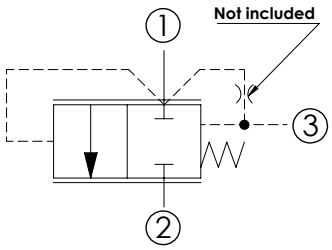

SPECIFICATIONS

Max. operating pressure:	350 bar
Rated flow:	100 l/min
Cavity:	VP000198
Weight:	0,11 kg
Spool:	Ø10 mm
Internal orifice:	M5 thread

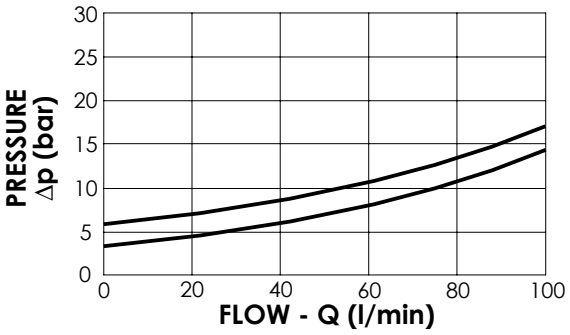

NOTES

Installation torque:	75 - 85 Nm
Seal kit:	RD700198
Parts in body compensator	

ORDERING CODES

Quick code	Description	Cracking pressure (bar)	
CD000216	CDLN-100-SCPD-13-198-N003	3	
CD000215	CDLN-100-SCPD-13-198-N006	6	
CD000220	CDLN-100-SCPD-13-198-N012	12	
CD000238	CDLN-100-SCPD-13-198-N016	16	

LOGIC ELEMENT

CDLN-160-SCTD

NORMALLY CLOSED SPOOL TYPE INTERNAL ORIFICE

ATLANTIC Fluid Tech

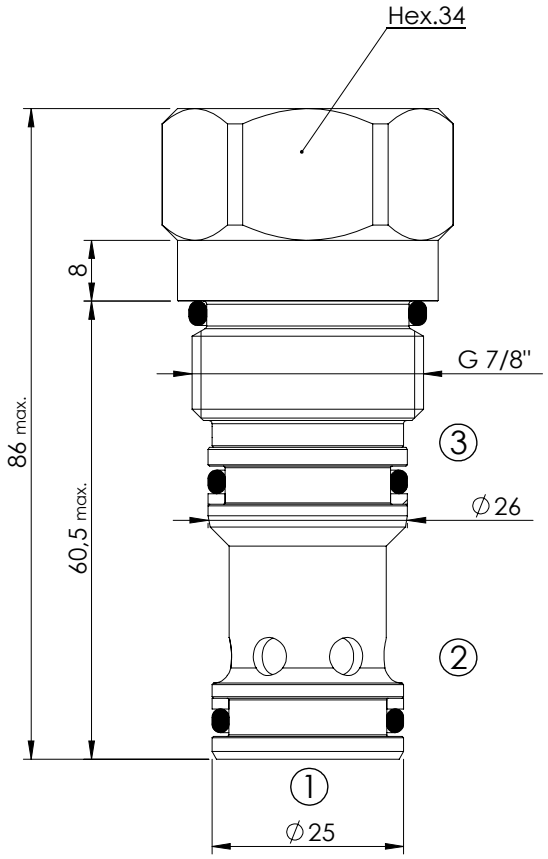

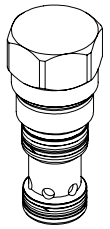

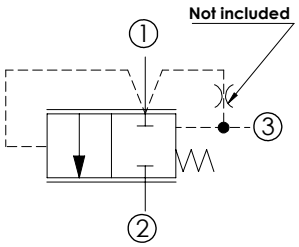

SPECIFICATIONS

Max. operating pressure:	350 bar
Rated flow:	160 l/min
Cavity:	VP000065
Weight:	0,32 kg
Spool:	Ø16 mm
Internal orifice:	M6 thread

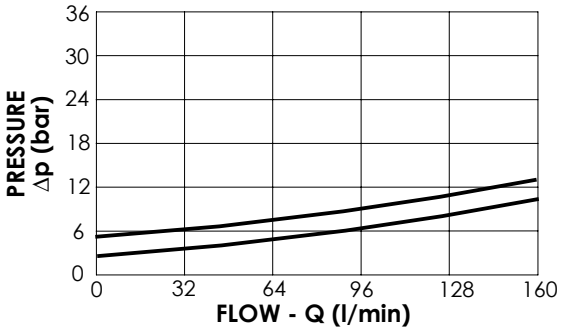

NOTES

Installation torque:	135-145 Nm
Seal kit:	RC900065
Parts in body compensator	

ORDERING CODES

Quick code	Description	Cracking pressure (bar)	
CD000081	CDLN-160-SCTD-13-065-N002	2	
CD000066	CDLN-160-SCTD-13-065-N006	6	
CD000003	CDLN-160-SCTD-13-065-N012	12	
CD000004	CDLN-160-SCTD-13-065-N016	16	

LOGIC ELEMENT

CDLN-300-SCTD

NORMALLY CLOSED SPOOL TYPE INTERNAL RESTRICTOR

ATLANTIC Fluid Tech

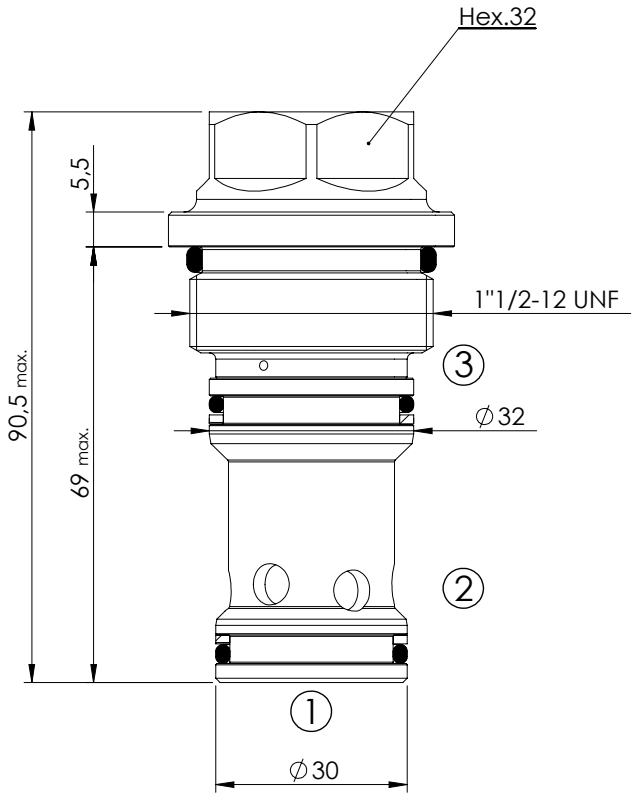

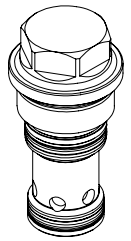

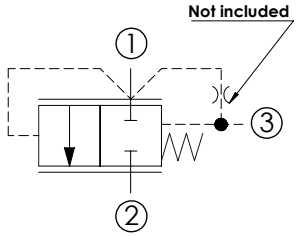

SPECIFICATIONS

Max. operating pressure:	350 bar
Rated flow:	300 l/min
Cavity:	VP000058
Weight:	0,55 kg
Spool:	Ø19 mm
Internal orifice:	M6 thread

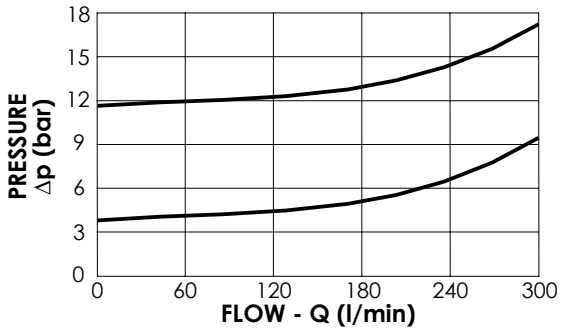

NOTES

Installation torque:	280-300 Nm
Seal kit:	RC700058
Parts in body compensator	

ORDERING CODES

Quick code	Description	Cracking pressure (bar)	
CD000095	CDLN-300-SCTD-13-058-N001	1,5	
CD000110	CDLN-300-SCTD-13-058-N004	4	

LOGIC ELEMENT

CDLN-500-SCTD

NORMALLY CLOSED
SPOOL TYPE
INTERNAL ORIFICE

ATLANTIC Fluid Tech

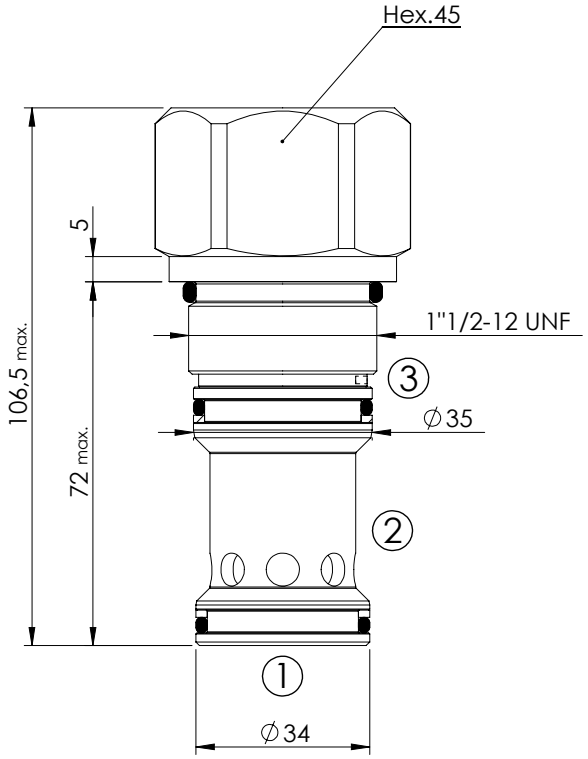

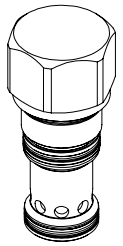

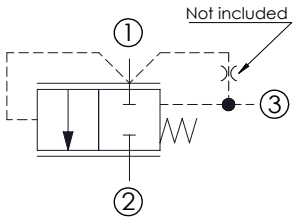

SPECIFICATIONS

Max. operating pressure:	**350 bar**
Rated flow:	**500 l/min**
Cavity:	**VP000178**
Weight:	**0,74 kg**
Spool:	**Ø22 mm**
Internal orifice:	**M6 thread**

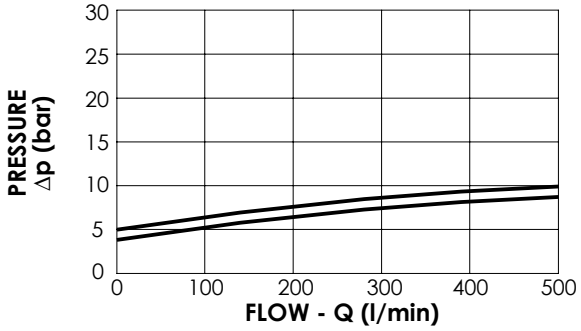

NOTES

Installation torque:	**280 - 300 Nm**
Seal kit:	**RC700178**
Parts in body compensator	

ORDERING CODES

Quick code	Description	Cracking pressure (bar)	
CD000067	**CDLN-500-SCTD-13-178-N005**	**5**	
CD000335	**CDLN-500-SCTD-13-178-N004**	**4**	

LOGIC ELEMENTS

CDLN-500-PCPS

NORMALLY CLOSED
POPPET TYPE
EXTERNALLY PILOTED

ATLANTIC Fluid Tech

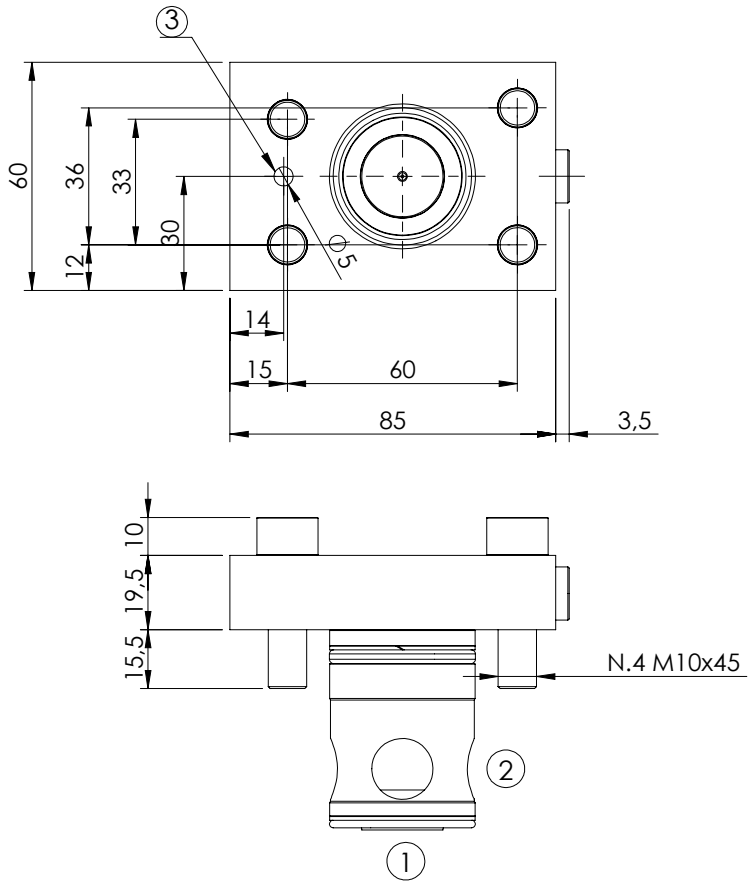

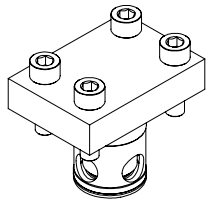

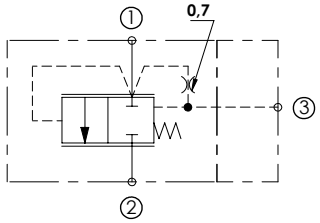

SPECIFICATIONS

Max. operating pressure:	350 bar
Rated flow:	500 l/min
Cavity:	VP000189
Weight:	1,1 kg

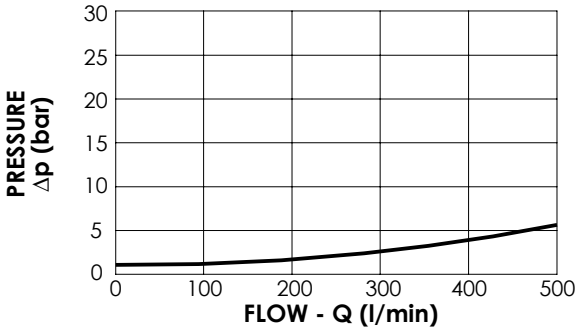

NOTES

Seal kit:	RC700189

ORDERING CODES

Quick code	Description	Main ports size	Standard setting (bar, Q=1 l/min)	Configuration
CD000376	CDLN-500-PCPS-01-189-N350	T: G1/8"	1	Logic element + cover
SC000049	SCLN-500-PCPS-01-189-N350			Logic element

LOGIC ELEMENT

CDLN-060-SCPR

NORMALLY OPEN SPOOL TYPE

ATLANTIC Fluid Tech

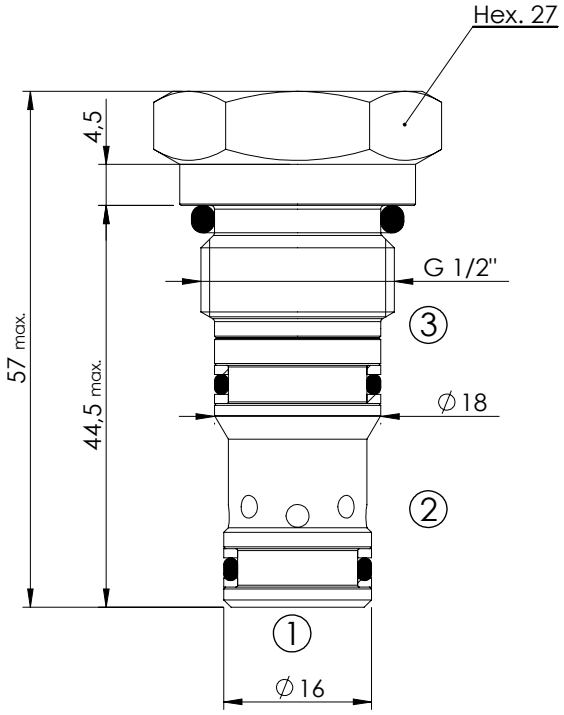

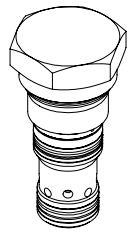

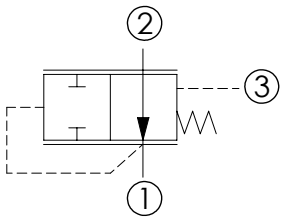

SPECIFICATIONS

Max. operating pressure:	350 bar
Rated flow:	60 l/min
Cavity:	VP000198
Weight:	0,12 kg
Spool:	Ø10 mm

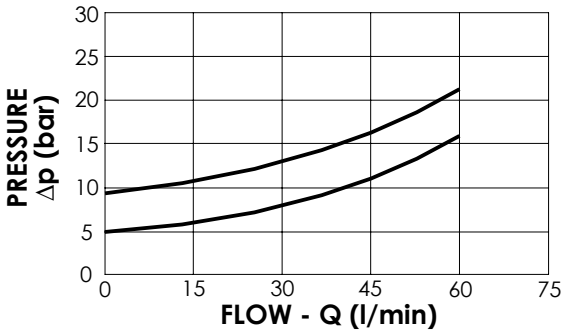

NOTES

Installation torque:	75 - 85 Nm
Seal kit:	RD700198
Parts in body compensator	

ORDERING CODES

Quick code	Description	Closing pressure (bar)	
CD000078	CDLN-060-SCPR-11-198-N005	5	
CD000184	CDLN-060-SCPR-11-198-N009	9,5	

LOGIC ELEMENT

CDLN-100-SBPE

NORMALLY OPEN SPOOL TYPE

ATLANTIC Fluid Tech

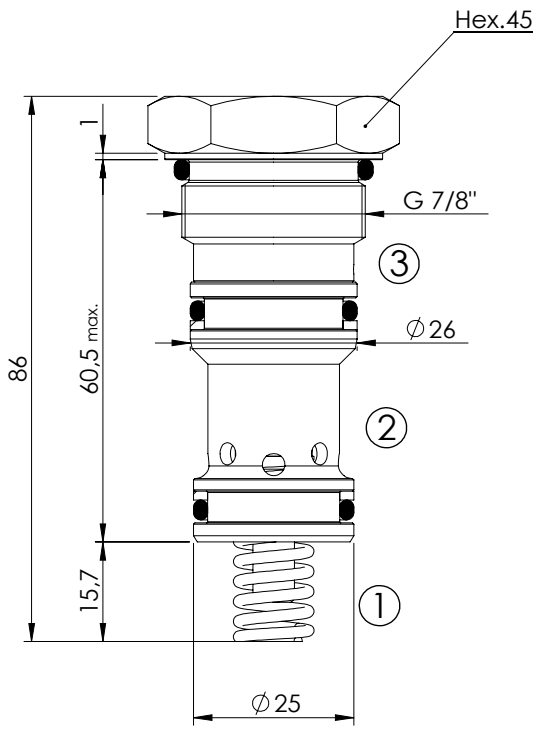

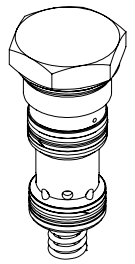

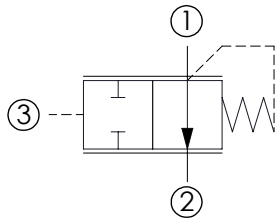

SPECIFICATIONS

Max. operating pressure:	350 bar
Rated flow:	100 l/min
Cavity:	VP000555
Weight:	0,27 kg
Spool:	Ø16 mm

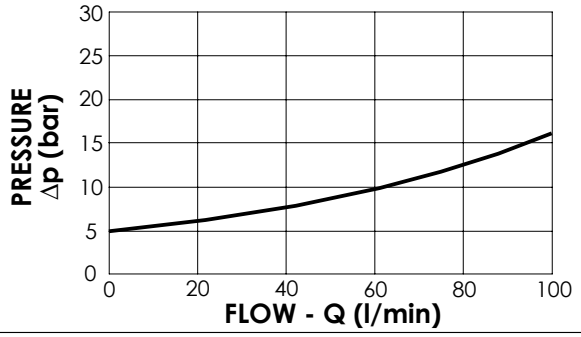

NOTES

Installation torque:	135-145 Nm
Seal kit:	RC700330
Parts in body compensator	

ORDERING CODES

Quick code	Description	Closing pressure (bar)	
CD000115	CDLN-100-SBPE-01-555-N005	5	

LOGIC ELEMENT

CDLN-200-SBPE

NORMALLY OPEN SPOOL TYPE

ATLANTIC Fluid Tech

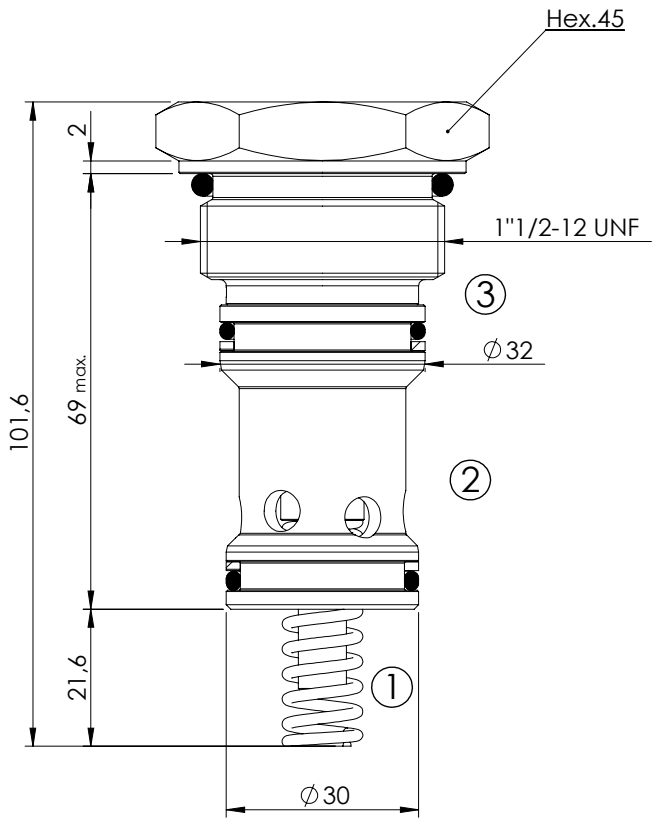

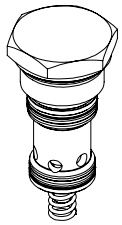

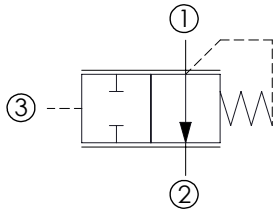

SPECIFICATIONS

Max. operating pressure:	350 bar
Rated flow:	200 l/min
Cavity:	VP000204
Weight:	0,50 kg
Spool:	Ø19 mm

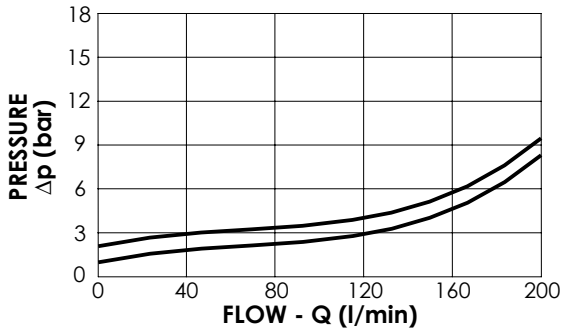

NOTES

Installation torque:	280 - 300 Nm
Seal kit:	RC700204
Parts in body compensator	

ORDERING CODES

Quick code	Description	Closing pressure (bar)	
CD000080	CDLN-200-SBPE-01-204-N001	1	
CD000286	CDLN-200-SBPE-01-204-N002	2	

LOGIC ELEMENT

CDLN-380-SBPE

NORMALLY OPEN SPOOL TYPE

ATLANTIC Fluid Tech

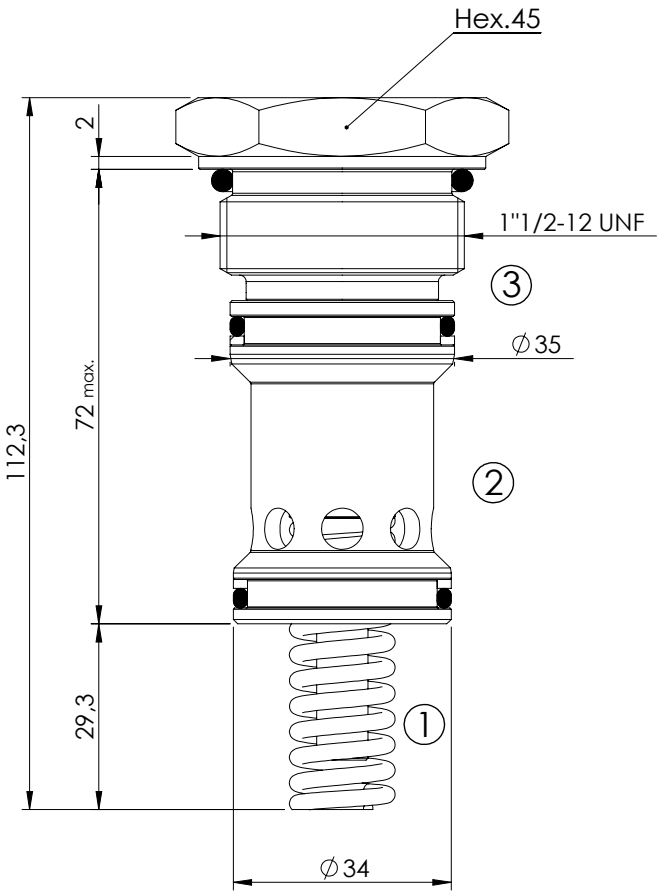

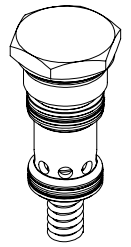

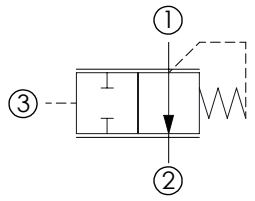

SPECIFICATIONS

Max. operating pressure:	**350 bar**
Rated flow:	**380 l/min**
Cavity:	**VP000330**
Weight:	**0,57 kg**
Spool:	**Ø22 mm**

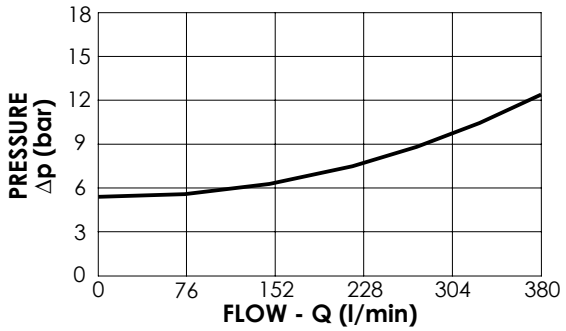

NOTES

Installation torque:	**280 - 300 Nm**
Seal kit:	**RC700330**
Parts in body compensator	

ORDERING CODES

Quick code	Description	Closing pressure (bar)	
CD000189	**CDLN-380-SBPE-01-330-N005**	**5,5**	

LOGIC ELEMENT

CDLN-160-SCTS

NORMALLY CLOSED
SPOOL TYPE
KICK DOWN TYPE

ATLANTIC Fluid Tech

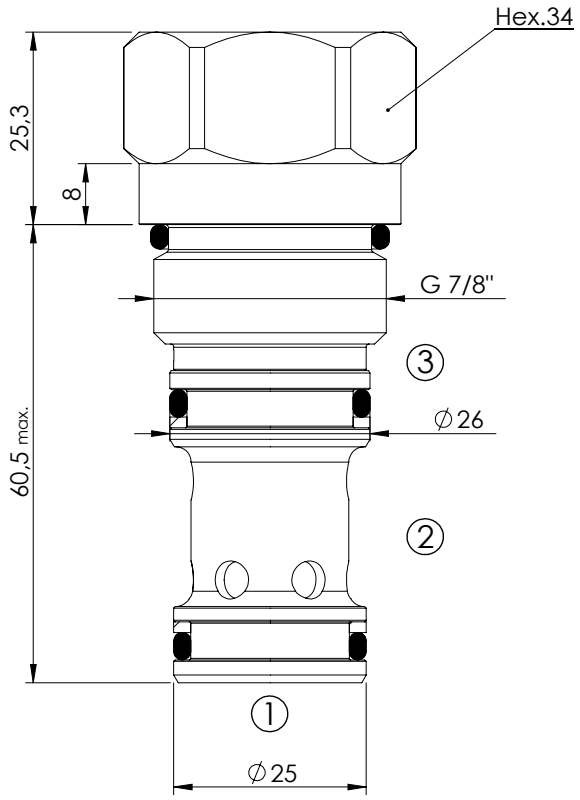

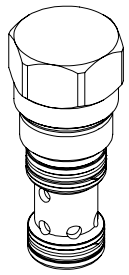

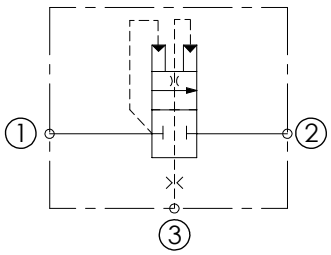

SPECIFICATIONS

Max. operating pressure:	350 bar
Rated flow:	160 l/min
Cavity:	VP000065
Weight:	0,33 kg
Spool:	Ø16 mm

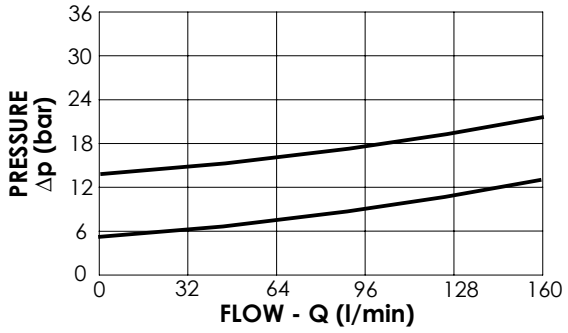

NOTES

Installation torque:	135 - 145 Nm
Seal kit:	RC900065
Parts in body compensator	

ORDERING CODES

Quick code	Description	Cracking pressure (bar)	
CD000298	CDLN-160-SCTS-01-065-N005	5	
CD000299	CDLN-160-SCTS-01-065-N014	14	

ATLANTIC
Fluid Tech

SECTION 12

Flow Dividers and Combiners

MANAGEMENT SYSTEM CERTIFICATION
DNV·GL
ISO 9001 = ISO 14001
OHSAS 18001

FLOW DIVIDERS AND COMBINERS

ATLANTIC Fluid Tech

Hydraulic scheme	Valve description	Valve type	Rated flow (l/min)	Max. pressure (bar)	Installation	Main port size or cavity type	Page
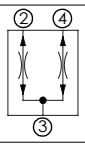	CFDT-055-BFAR	Spool type, divider and combiner	55	350	Cartridge	SAE-10-4N	12.01.**010**
	CFDT-160-BFRR	Spool type, divider and combiner	160	350	Cartridge	SAE-16-4N	12.01.**020**
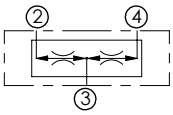	MFDT-040-BFTR	Spool type, divider and combiner	40	210	In line	G 3/8"	12.02.**030**
	MFDT-040-BFTR	Spool type, divider and combiner	40	210	In line	G 1/2"	12.02.**030**
	MFDT-150-BFLR	Spool type, divider and combiner	150	210	In line	G 1"	12.02.**040**
	MFDT-150-BFLR	Spool type, divider and combiner	150	210	In line	G 3/4"	12.02.**040**
	KFDT-055-BFAR	Spool type, divider and combiner	55	210	In line	G 1/4"	12.02.**050**
	KFDT-055-BFAR	Spool type, divider and combiner	40	210	In line	G 3/8"	12.02.**050**
	KFDT-055-BFAR	Spool type, divider and combiner	55	210	In line	G 1/2"	12.02.**050**

FLOW DIVIDER AND COMBINER

CFDT-055-BFRR

ATLANTIC Fluid Tech

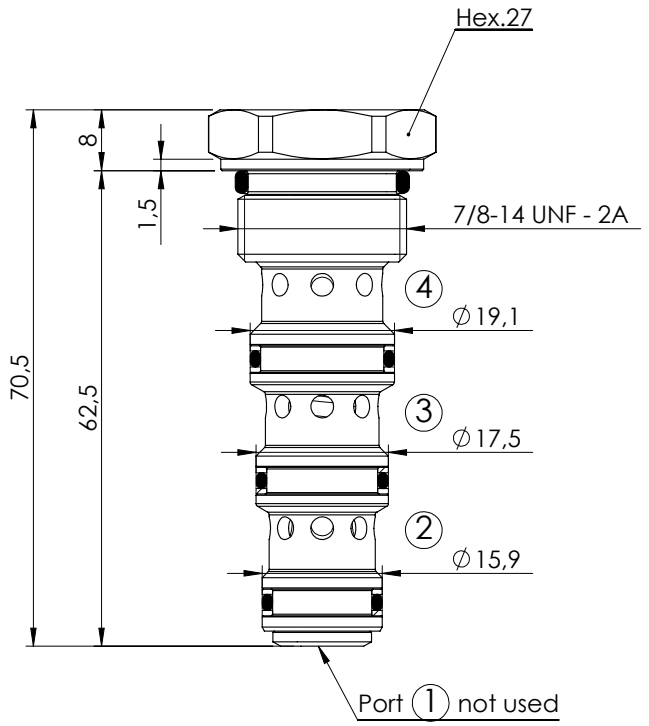

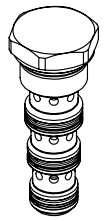

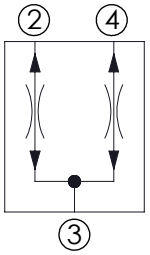

SPECIFICATIONS

Max. operating pressure:	350 bar
Division or combination:	50%-50%
Cavity:	SAE-10-4N -3P
Weight:	0,13 kg
Installation torque:	55 - 62 Nm

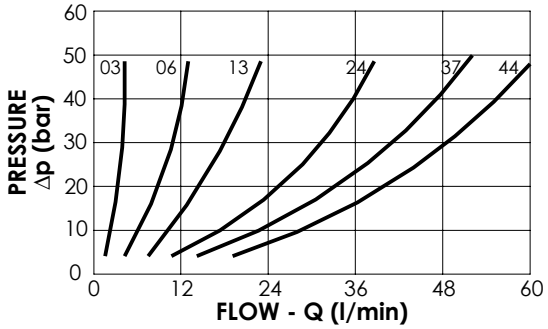

NOTES

Seal kit:	RB700102

Flow divider accuracy: ± 7/8% between 40-100% of max. input flow

- Other dividing ratios available.

ORDERING CODES

Quick code	Description	Inlet range Flow (l/min)	
CF000047	CFDT-055-BFRR-03-S10-N350	1,2-3	
CF000048	CFDT-055-BFRR-06-S10-N350	3-6	
CF000049	CFDT-055-BFRR-13-S10-N350	6-13	
CF000050	CFDT-055-BFRR-24-S10-N350	10-24	
CF000001	CFDT-055-BFRR-37-S10-N350	15-37	
CF000051	CFDT-055-BFRR-44-S10-N350	18-44	

FLOW DIVIDER AND COMBINER

CFDT-160-BFRR

ATLANTIC Fluid Tech

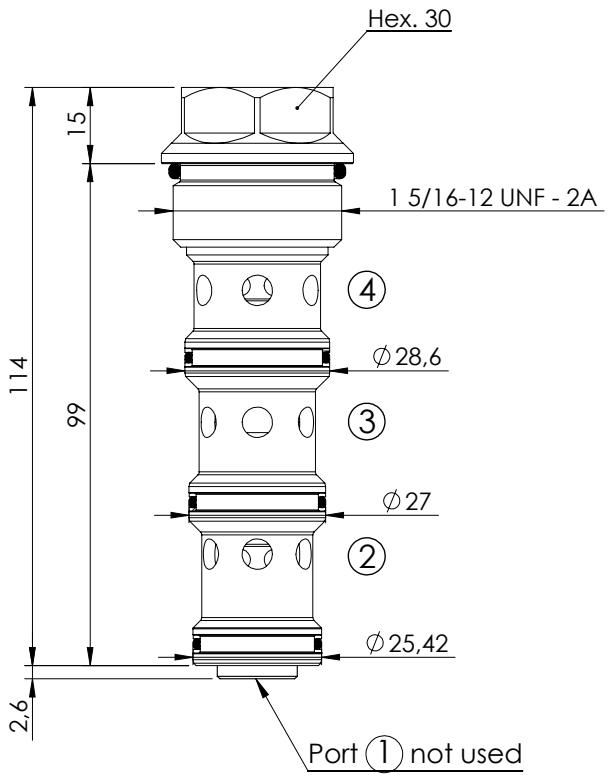

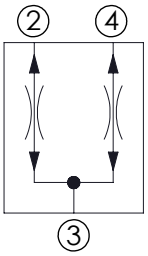

SPECIFICATIONS

Max. operating pressure:	350 bar
Division or combination:	50%-50%
Cavity:	SAE-16-4N
Weight:	0,36 kg
Installation torque:	118 - 132 Nm

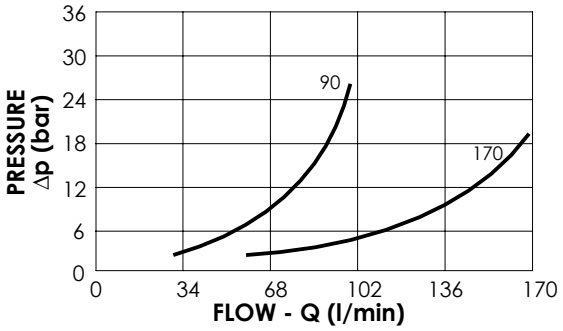

NOTES

Seal kit:	RB700104

Flow divider accuracy: ± 7/8% between 40-100% of max. input flow

- Other dividing ratios available.

ORDERING CODES

Quick code	Description	Inlet range Flow (l/min)	
CF000364	CFDT-160-BFRR-90-S16-N350	30 - 90	
CF000370	CFDT-160-BFRR-170-S16-N350	50 - 170	

FLOW DIVIDER AND COMBINER

MFDT-040-BFTR

ATLANTIC Fluid Tech

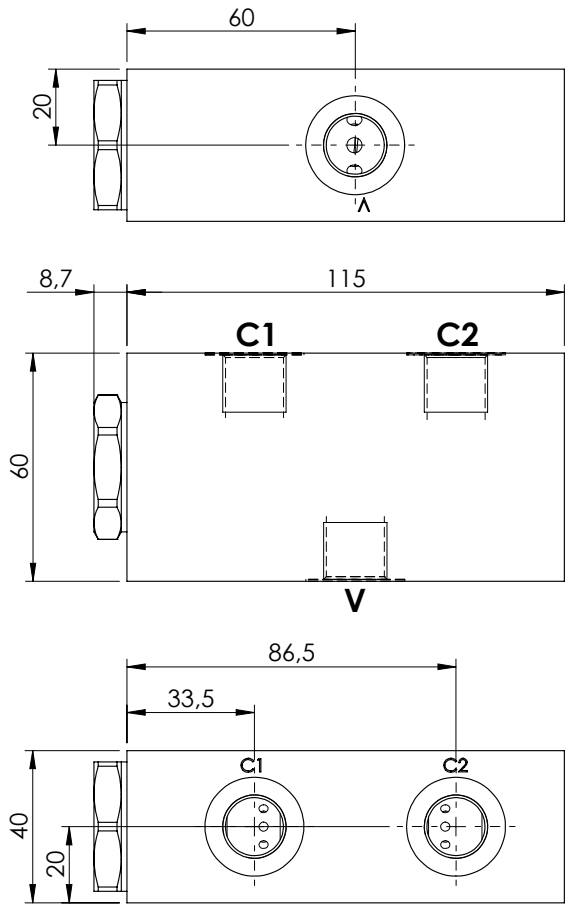

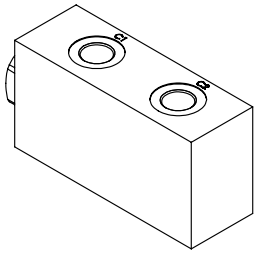

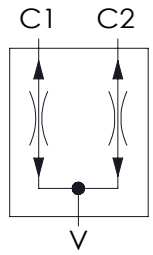

SPECIFICATIONS

Max. operating pressure:	210 bar
Division or combination:	50% - 50%
Manifold:	Aluminium
Weight:	0,88 kg
Cavity:	VP000242

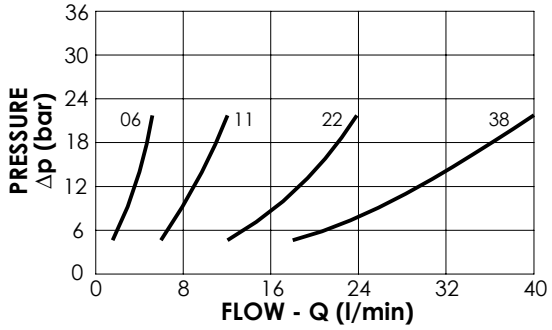

NOTES

Flow divider accuracy: ± 4/5% between 40-100% of max. input flow

ORDERING CODES

Quick code	Description	Main ports size	Inlet range Flow (l/min)	
MF000076	**MFDT-040-BFTR-06-G38-N210**	V:**G3/8"** ; C1,C2:**G 3/8"**	**2,8 - 5,8**	
MF000077	**MFDT-040-BFTR-11-G38-N210**	V:**G3/8"** ; C1,C2:**G 3/8"**	**6,5 - 11**	
MF000078	**MFDT-040-BFTR-22-G38-N210**	V:**G3/8"** ; C1,C2:**G 3/8"**	**13 - 22**	
MF000075	**MFDT-040-BFTR-38-G38-N210**	V:**G3/8"** ; C1,C2:**G 3/8"**	**25 - 38**	
MF000080	**MFDT-040-BFTR-06-G12-N210**	V:**G1/2"** ; C1,C2:**G 3/8"**	**2,8 - 5,8**	
MF000081	**MFDT-040-BFTR-11-G12-N210**	V:**G1/2"** ; C1,C2:**G 3/8"**	**6,5 - 11**	
MF000082	**MFDT-040-BFTR-22-G12-N210**	V:**G1/2"** ; C1,C2:**G 3/8"**	**13 - 22**	
MF000079	**MFDT-040-BFTR-38-G12-N210**	V:**G1/2"** ; C1,C2:**G 3/8"**	**25 - 38**	

FLOW DIVIDER AND COMBINER

MFDT-150-BFLR

ATLANTIC Fluid Tech

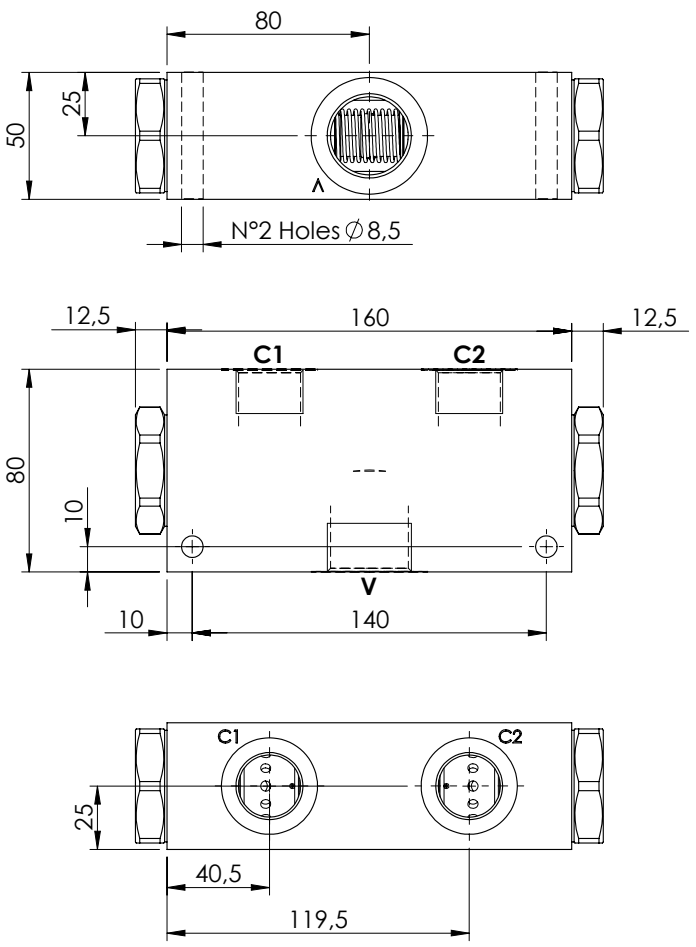

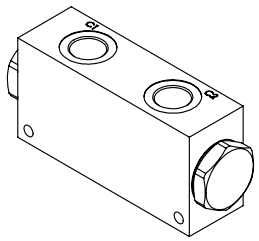

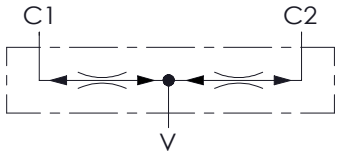

SPECIFICATIONS

Max. operating pressure:	**210 bar**
Division or combination:	**50% - 50%**
Manifold:	**Aluminium**
Weight:	**2,1 kg**

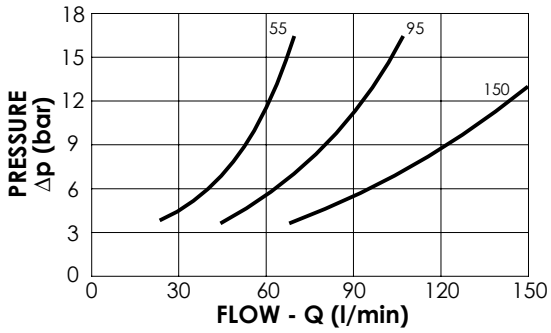

NOTES

Flow divider accuracy: ± 4-5% between 40-100% of max. input flow

ORDERING CODES

Quick code	Description	Main ports size	Inlet range Flow (l/min)	
MF000117	**MFDT-150-BFLR-95-G10-N210**	V: **G 1"** C1,C2: **G 3/4"**	**56 - 95**	
MF000118	**MFDT-150-BFLR-15-G10-N210**	V: **G 1"** C1,C2: **G 3/4"**	**90 - 150**	
MF000122	**MFDT-150-BFLR-55-G34-N210**	V: **G 3/4"** C1,C2: **G 1/2"**	**28 - 55**	
MF000123	**MFDT-150-BFLR-95-G34-N210**	V: **G 3/4"** C1,C2: **G 1/2"**	**56 - 95**	

FLOW DIVIDER AND COMBINER

KFDT-055-BFAR

ATLANTIC Fluid Tech

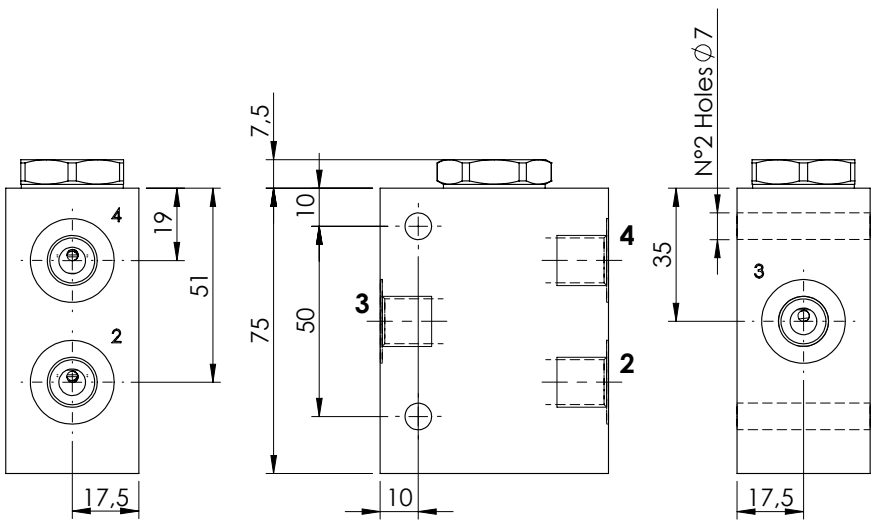

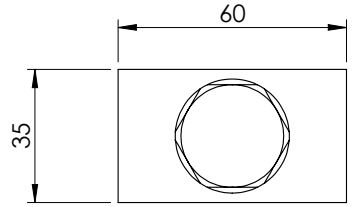

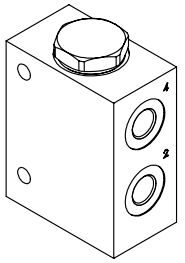

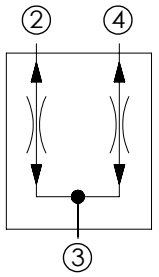

SPECIFICATIONS

Max. operating pressure:	210 bar
Division or combination:	50%-50%
Manifold:	Aluminium
Weight:	0,46 kg
Size:	SAE-10-4N

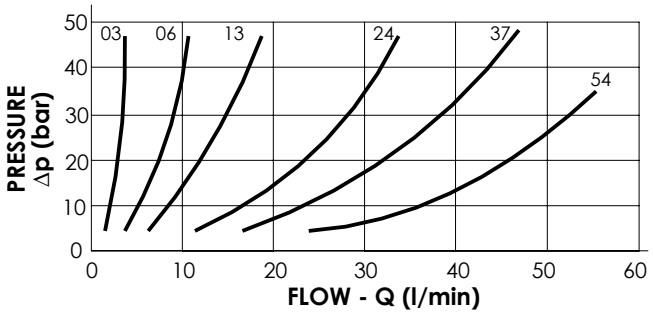

NOTES

Flow divider accuracy: ± 7/8% between 40-100% of max. input flow

ORDERING CODES

Quick code	Description	Main ports size	Inlet range Flow (l/min)	
KF000005	KFDT-055-BFAR-03-G14-N210-L	2,3,4 : **G 1/4"**	**1.2-3**	
KF000006	KFDT-055-BFAR-06-G14-N210-L	2,3,4 : **G 1/4"**	**3-6**	
KF000007	KFDT-055-BFAR-13-G14-N210-L	2,3,4 : **G 1/4"**	**6-13**	
KF000010	KFDT-055-BFAR-13-G38-N210-L	2,3,4 : **G 3/8"**	**6-13**	
KF000011	KFDT-055-BFAR-24-G38-N210-L	2,3,4 : **G 3/8"**	**10-24**	
KF000012	KFDT-055-BFAR-37-G38-N210-L	2,3,4 : **G 3/8"**	**15-37**	
KF000009	KFDT-055-BFAR-37-G12-N210-L	2,3,4 : **G 1/2"**	**15-37**	
KF000008	KFDT-055-BFAR-44-G12-N210-L	2,3,4 : **G 1/2"**	**18-44**	
KF000004	KFDT-055-BFAR-54-G12-N210-L	2,3,4 : **G 1/2"**	**22-54**	

ATLANTIC
Fluid Tech

SECTION 13

Flow Control Valves

MANAGEMENT SYSTEM CERTIFICATION
DNV·GL
ISO 9001 = ISO 14001
OHSAS 18001

FLOW CONTROL VALVES

ATLANTIC Fluid Tech

Hydraulic scheme	Valve description	Valve type	Rated flow (l/min)	Max. pressure (bar)	Installation	Main port size or cavity type	Page
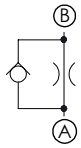	CFFN-015-MFSR	Disk type, double mounting	15	350	Insert	G 1/4"	13.01.**010**
	CFFN-030-MFSR	Disk type, double mounting	30	350	Insert	G 3/8"	13.01.**020**
	CFFN-070-MFSR	Disk type, double mounting	70	350	Insert	G 1/2"	13.01.**030**
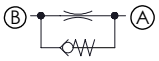	CDFN-010-PSNC	Poppet type	10	350	Sleeve	G 1/4"	13.02.**040**
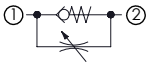	CFSN-040-MHRR	Not compensated	40	350	Cartridge	SAE-08-2N	13.03.**050**
	CFSN-040-BHRR	Not compensated	40	350	Cartridge	SAE-08-2N	13.04.**060**
	CFSN-070-BHRR	Not compensated	70	350	Cartridge	SAE-10-2N	13.04.**070**
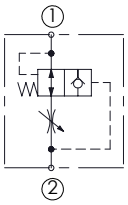	CFHN-030-MHST	Hose burst valve	29	350	Insert	G 1/4"	13.05.**080**
	CFHN-050-MHST	Hose burst valve	45	350	Insert	G 3/8"	13.05.**080**
	CFHN-070-MHST	Hose burst valve	67	350	Insert	G 1/2"	13.05.**080**
	CFHN-170-MHST	Hose burst valve	169	350	Insert	G 3/4"	13.05.**080**
	CFHN-230-MHST	Hose burst valve	223	350	Insert	G 1"	13.05.**080**
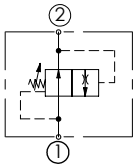	CFST-010-MDST	Two ways compensated	10	350	Insert	G 1/4"	13.06.**090**
	CFST-025-MDST	Two ways compensated	25	350	Insert	G 3/8"	13.06.**090**
	CFST-070-MDST	Two ways compensated	67	350	Insert	G 1/2"	13.06.**090**
	CFST-150-MDST	Two ways compensated	150	350	Insert	G 3/4"	13.06.**090**
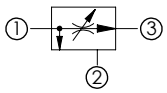	CFCT-060-MHRR	Three ways combination	60	350	Cartridge	SAE-10-3N	13.07.**100**
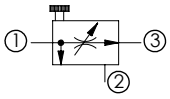	CFPT-140-MVRR	Three ways combination	140	350	Cartridge	SAE-16-3N	13.08.**110**
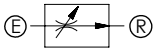	MFST-030-RVTR-30	Two ways compensated	30	210-350	In line	G 3/8"	13.09.**120**
	MFST-055-RVTR-55	Two ways compensated	55	210-350	In line	G 1/2"	13.09.**130**
	MFST-090-RPZR	Two ways compensated	90	210	In line	G 1/2"	13.09.**140**
	MFST-090-RVTR-90	Two ways compensated	90	210-350	In line	G 3/4"	13.09.**150**
	MFST-190-RVTR-19	Two ways compensated	190	210-350	In line	G 1"	13.09.**160**
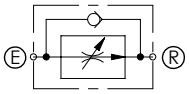	MFST-055-VVTR	Two ways compensated with check valve	55	210	In line	G 1/2"	13.10.**170**
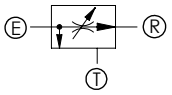	MFCT-055-RVTR-30	Three ways compensated	55	210-350	In line	G 3/8"	13.11.**180**
	MFCT-090-RVTR-55	Three ways compensated	90	210-350	In line	G 1/2"	13.11.**190**
	MFCT-090-RPZR	Three ways compensated	90	210	In line	G 1/2"	13.11.**200**
	MFCT-150-RVTR-90	Three ways compensated	150	210-350	In line	G 3/4"	13.11.**210**
	MFCT-280-RVTR-19	Three ways compensated	280	210-350	In line	G 1"	13.11.**220**
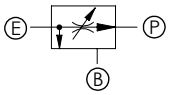	MFPT-090-RVTR	Pressure compensated, priority flow regulator	90	210	In line	G 1/2"	13.11.**230**
	MFPT-090-RPZR	Pressure compensated, priority flow regulator	90	210	In line	G 1/2"	13.11.**240**

FLOW CONTROL VALVES

ATLANTIC Fluid Tech

Hydraulic scheme	Valve description	Valve type	Rated flow (l/min)	Max. pressure (bar)	Installation	Main port size or cavity type	Page
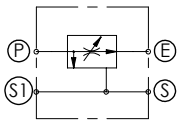	MFCT-090-RVTN	Three ways compensated	90	210	In line	G 1/2"	13.11.**250**
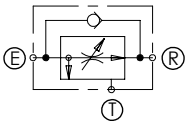	MFCT-090-VPZR	Three ways compensated with check valve	90	210	In line	G 1/2"	13.12.**260**
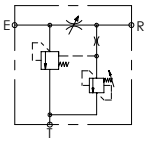	MFCT-090-LPZR	Three ways compensated with relief valve	90	210	In line	G 1/2"	13.13.**270**
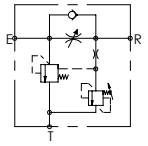	MFCT-090-TPZR	Three ways compensated by pass check valve	90	210	In line	G 1/2"	13.14.**280**
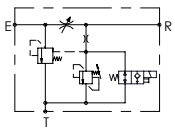	MFCT-090-MPTR MFCT-280-MVTR	Three ways with relief valve and electric unloading Three ways with relief valve and electric unloading	90 280	210 210	In line In line	G 1/2" G 1"	13.15.**290** 13.16.**300**
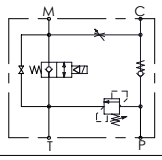	BPNN-025-LLEU	Solenoid operated valves	25	350	In line	G 1/2"	13.17.**310**
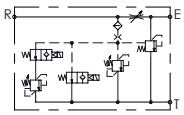	MFCT-150-LHTR	Three ways compensated with relief valve	150	210	In line	G 1"	13.18.**320**
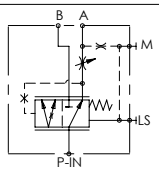	MFPT-100-RHAR	Pressure compensated, priority flow regulator	100	350	In line	G 1/2"	13.19.**330**
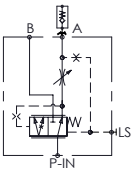	MFPT-200-RHAR MFPT-300-RHAR	Pressure compensated, priority flow regulator Pressure compensated, priority flow regulator	200 300	350 350	In line In line	G 3/4" G 1"	13.20.**340** 13.20.**350**
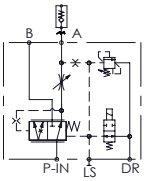	MFPT-100-MHAR MFPT-200-MHAR MFPT-300-MHAR	Pressure compensated, priority flow regulator Pressure compensated, priority flow regulator Pressure compensated, priority flow regulator	100 200 300	350 350 350	In line In line In line	G 1/2" G 3/4" G 1"	13.21.**360** 13.21.**370** 13.21.**380**
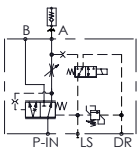	MFPT-400-MHAR	Pressure compensated, priority flow regulator	400	350	In line	G 1" 1/4	13.22.**390**

FLOW CONTROL VALVES

ATLANTIC Fluid Tech

Hydraulic scheme	Valve description	Valve type	Rated flow (l/min)	Max. pressure (bar)	Installation	Main port size or cavity type	Page
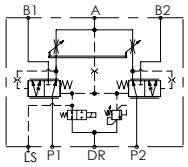	MFTT-100-MHAR	Pressure compensated, priority flow regulator	2x100	350	In line	G 1/2"	13.23.**400**
	MFTT-200-MHAR	Pressure compensated, priority flow regulator	2x200	350	In line	G 3/4"	13.23.**410**
	MFTT-300-MHAR	Pressure compensated, priority flow regulator	2x300	350	In line	G 1"	13.23.**420**
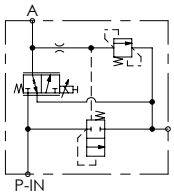	MFCZ-040-LSLR	Proportional valve, compensated	40	210	In line	G 3/8"	13.24.**430**
	MFCZ-030-LSLR	Proportional valve, compensated	30	210	In line	G 3/8"	13.24.**430**
	MFCZ-020-LSLR	Proportional valve, compensated	20	210	In line	G 3/8"	13.24.**430**
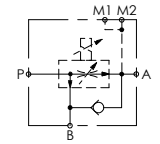	MFPC-140-AMLR	Proportional valve, compensated	90	210	In line	G 1/2"	13.25.**440**
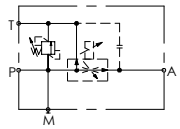	MFPC-140-LMLR	Proportional valve, compensated	90	210	In line	G 1/2"	13.26.**450**
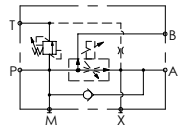	MFPC-140-TMLR	Proportional valve,compensated	90	210	In line	G 1/2"	13.27.**460**
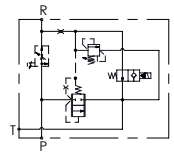	MFPC-200-MMAR	Proportional valve, compensated	200	250	In line	G 3/4"	13.28.**470**

FLOW CONTROL VALVES

CFFN-015-MFSR

INSERT TYPE DOUBLE MOUNTING

ATLANTIC Fluid Tech

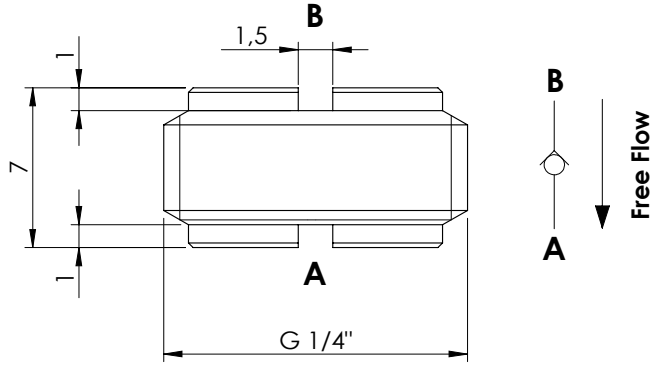

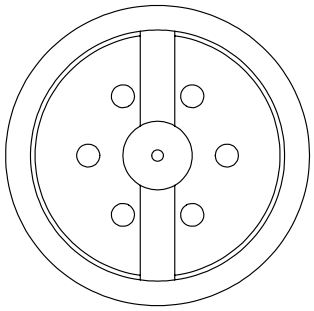

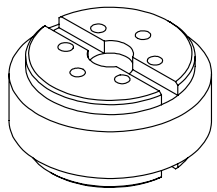

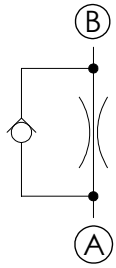

SPECIFICATIONS

Max. operating pressure:	350 bar
Rated flow:	15 l/min
Cavity:	G 1/4"
Weight:	0,01 kg
Installation torque:	5 Nm

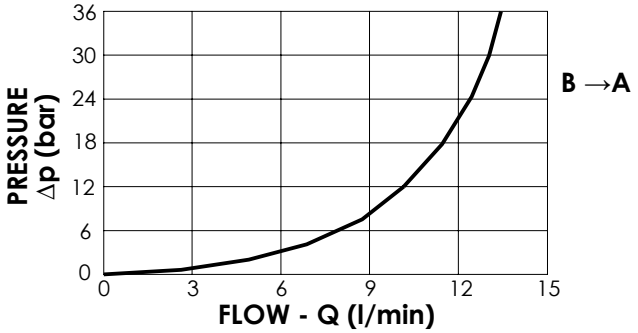

ORDERING CODES

Quick code	Description	∅ Orifice	Quick code	Description	∅ Orifice
CF000118	CFFN-015-MFSR-05-G14-N350	0,5	CF000205	CFFN-015-MFSR-13-G14-N350	1,3
CF000119	CFFN-015-MFSR-06-G14-N350	0,6	CF000206	CFFN-015-MFSR-14-G14-N350	1,4
CF000120	CFFN-015-MFSR-07-G14-N350	0,7	CF000123	CFFN-015-MFSR-15-G14-N350	1,5
CF000121	CFFN-015-MFSR-08-G14-N350	0,8	CF000207	CFFN-015-MFSR-16-G14-N350	1,6
CF000203	CFFN-015-MFSR-09-G14-N350	0,9	CF000208	CFFN-015-MFSR-17-G14-N350	1,7
CF000088	CFFN-015-MFSR-10-G14-N350	1	CF000209	CFFN-015-MFSR-18-G14-N350	1,8
CF000204	CFFN-015-MFSR-11-G14-N350	1,1	CF000210	CFFN-015-MFSR-19-G14-N350	1,9
CF000122	CFFN-015-MFSR-12-G14-N350	1,2	CF000124	CFFN-015-MFSR-20-G14-N350	2,0

FLOW CONTROL VALVES

CFFN-030-MFSR

INSERT TYPE
DOUBLE MOUNTING

ATLANTIC Fluid Tech

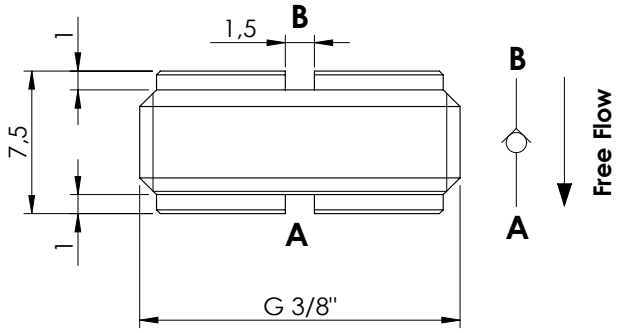

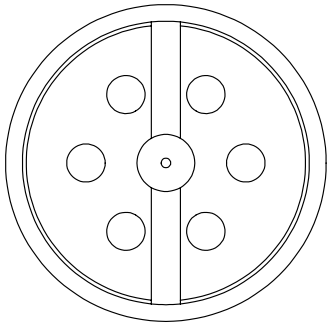

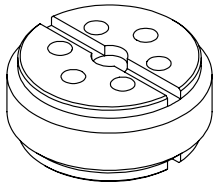

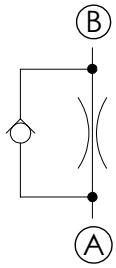

SPECIFICATIONS

Max. operating pressure:	350 bar
Rated flow:	30 l/min
Cavity:	G 3/8
Weight:	0,01 kg
Installation torque:	10 Nm

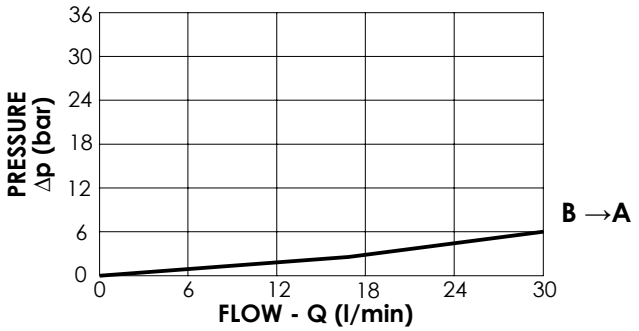

ORDERING CODES

Quick code	Description	∅ Orifice	Quick code	Description	∅ Orifice
CF000068	CFFN-030-MFSR-05-G38-N350	0,5	CF000197	CFFN-030-MFSR-13-G38-N350	1,3
CF000069	CFFN-030-MFSR-06-G38-N350	0,6	CF000198	CFFN-030-MFSR-14-G38-N350	1,4
CF000070	CFFN-030-MFSR-07-G38-N350	0,7	CF000074	CFFN-030-MFSR-15-G38-N350	1,5
CF000071	CFFN-030-MFSR-08-G38-N350	0,8	CF000199	CFFN-030-MFSR-16-G38-N350	1,6
CF000195	CFFN-030-MFSR-09-G38-N350	0,9	CF000200	CFFN-030-MFSR-17-G38-N350	1,7
CF000072	CFFN-030-MFSR-10-G38-N350	1	CF000201	CFFN-030-MFSR-18-G38-N350	1,8
CF000196	CFFN-030-MFSR-11-G38-N350	1,1	CF000202	CFFN-030-MFSR-19-G38-N350	1,9
CF000073	CFFN-030-MFSR-12-G38-N350	1,2	CF000125	CFFN-030-MFSR-20-G38-N350	2,0

FLOW CONTROL VALVES

CFFN-070-MFSR

INSERT TYPE
DOUBLE MOUNTING

ATLANTIC Fluid Tech

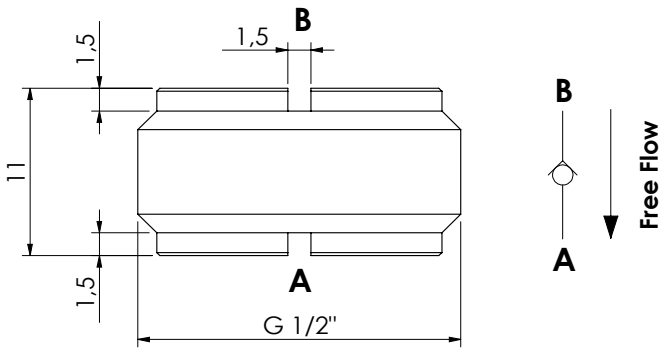

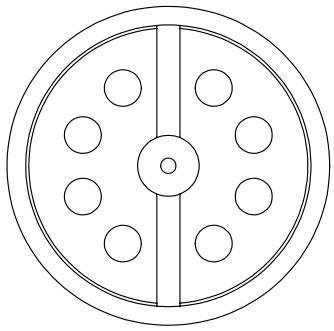

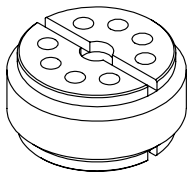

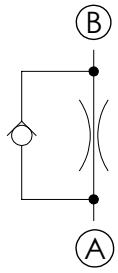

SPECIFICATIONS

Max. operating pressure:	350bar
Rated flow:	70 l/min
Cavity:	G 1/2
Weight:	0,02 kg
Installation torque:	10 Nm

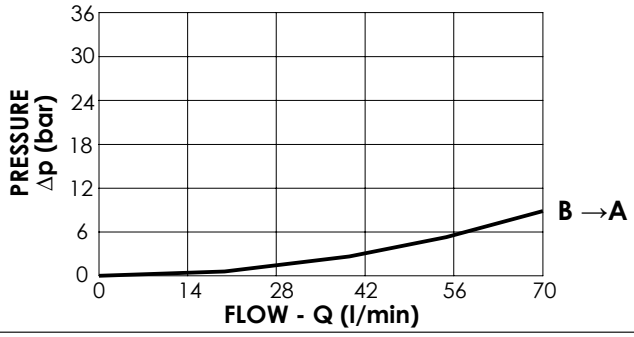

ORDERING CODES

Quick code	Description	∅ Orifice	Quick code	Description	∅ Orifice
CF000127	CFFN-070-MFSR-10-G12-N350	1,0	CF000080	CFFN-070-MFSR-33-G12-N350	3,3
CF000128	CFFN-070-MFSR-15-G12-N350	1,5			
CF000352	CFFN-070-MFSR-18-G12-N350	1,8			
CF000117	CFFN-070-MFSR-20-G12-N350	2,0			
CF000129	CFFN-070-MFSR-25-G12-N350	2,5			
CF000130	CFFN-070-MFSR-30-G12-N350	3,0			

FLOW RESTRICTOR

CDFN-010-PSNC

MONO DIRECTIONAL NOT COMPENSATED

ATLANTIC Fluid Tech

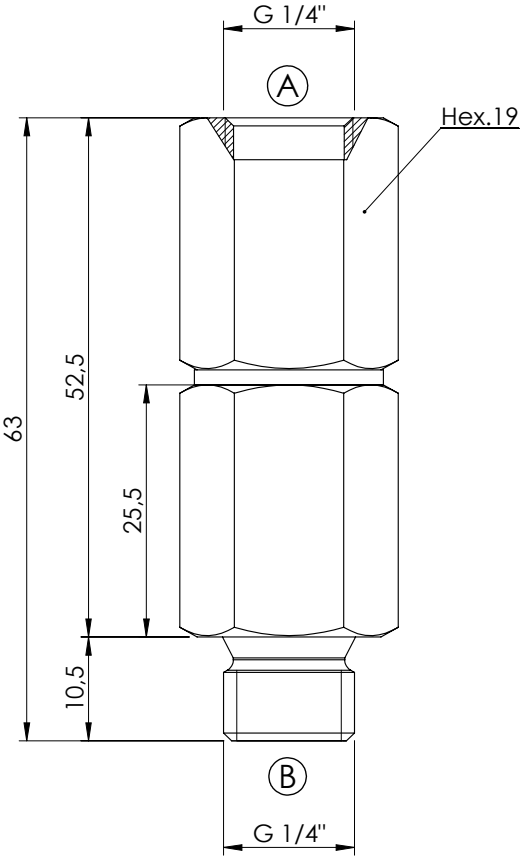

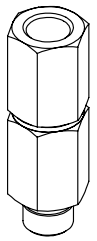

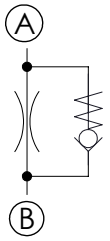

SPECIFICATIONS

Max. operating pressure:	350 bar
Rated flow (A to B):	10 l/min
Material:	Steel
Weight:	0,11 kg

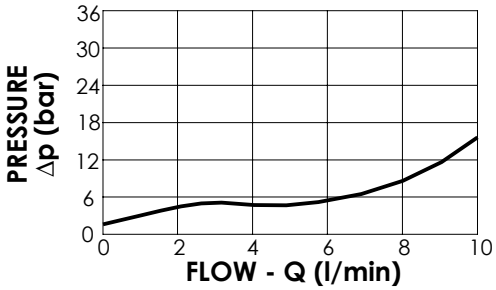

ORDERING CODES

Quick code	Description	Cracking pressure (bar)	Ports	∅ Hole (mm)
CD000084	CDFN-010-PSNC-05-G14-N350	5	A,B: G 1/4"	∅0,5
CD000085	CDFN-010-PSNC-06-G14-N350	5	A,B: G 1/4"	∅0,6
CD000086	CDFN-010-PSNC-07-G14-N350	5	A,B: G 1/4"	∅0,7
CD000087	CDFN-010-PSNC-08-G14-N350	5	A,B: G 1/4"	∅0,8
CD000089	CDFN-010-PSNC-10-G14-N350	5	A,B: G 1/4"	∅1
CD000091	CDFN-010-PSNC-13-G14-N350	5	A,B: G 1/4"	∅1,3
CD000167	CDFN-010-PSNC-03-G14-N350	5	A,B: G 1/4"	∅0,5 & wire ∅0,4
CD000168	CDFN-010-PSNC-04-G14-N350	5	A,B: G 1/4"	∅0,6 & wire ∅0,4

FLOW RESTRICTOR

CFSN-040-MHRR

NEEDLE RESTRICTOR FREE REVERSE FLOW

ATLANTIC Fluid Tech

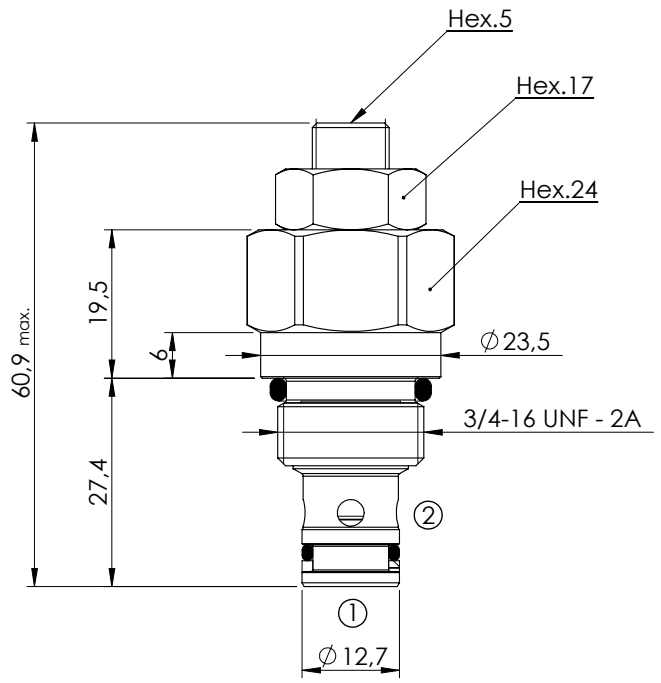

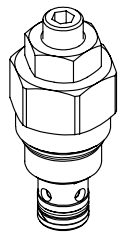

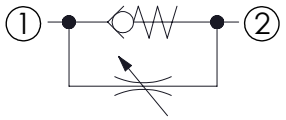

SPECIFICATIONS

Max. operating pressure:	350 bar
Rated Flow:	40 l/min
Material:	Steel
Cavity:	SAE-08-2N
Weight:	0,12 kg
Seal kit:	RA700081

NOTES

Installation torque:	45-50 Nm

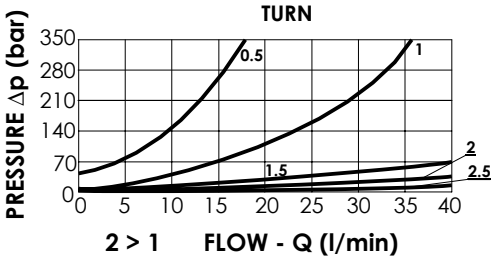

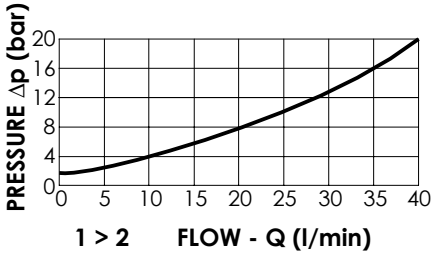

ADJUSTMENT OPTIONS

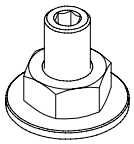

Adjustment with Screw

ORDERING CODES

Quick code	Description	Options	
CF000167	CFSN-040-MHRR-NP-S08-N350	Adjustment with Screw	

FLOW RESTRICTOR

CFSN-040-BHRR

ATLANTIC Fluid Tech

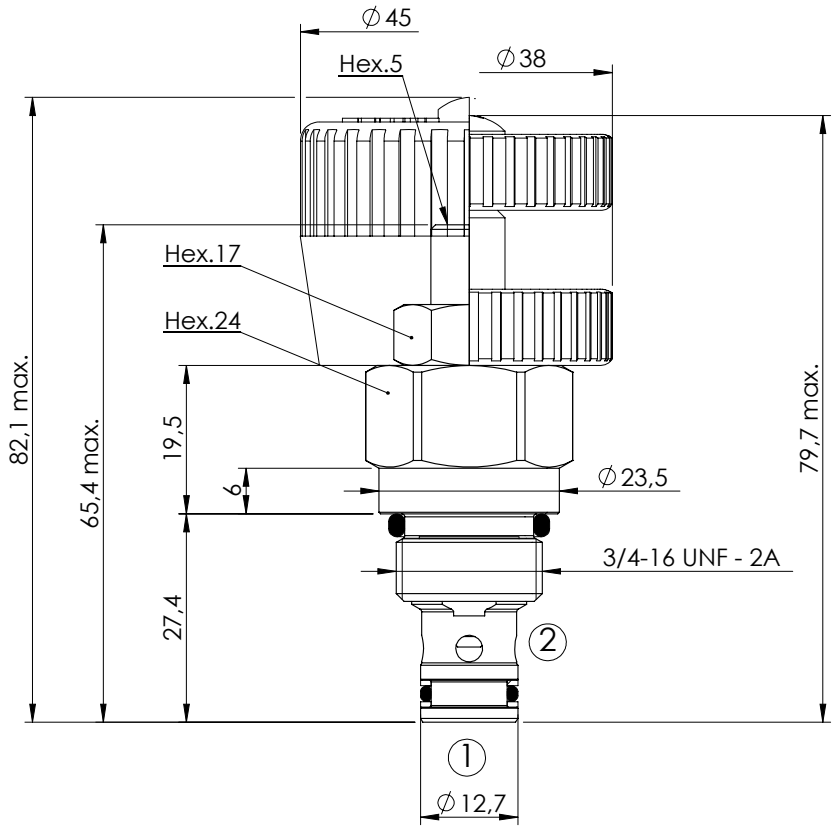

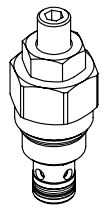

SPECIFICATIONS

Max. operating pressure:	350 bar
Rated flow:	40 l/min
Material:	Steel
Cavity:	SAE-08-2N
Weight:	0,12 kg
Seal kit:	RB700081

NOTES

Installation torque:	45-50 Nm

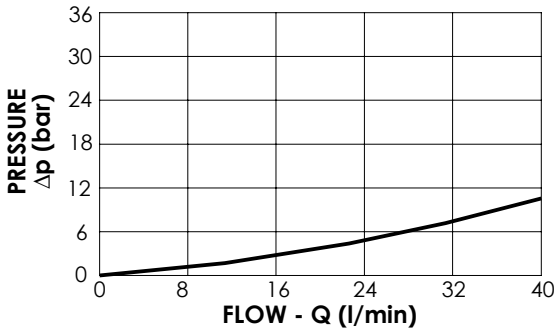

Fully open
Both directions

ADJUSTMENT OPTIONS

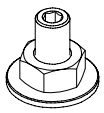

Screw and locknut

Handknob and locknut

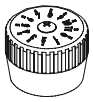

Graduated handknob

ORDERING CODES

Quick code	Description	Adjustment options	
CF000112	CFSN-040-BHRR-NP-S08-N350	Screw and locknut	
CF000109	CFSN-040-BVRR-NP-S08-N350	Handknob and locknut	
CF000253	CFSN-040-BMRR-NP-S08-N350	Graduated handknob	

FLOW RESTRICTOR

CFSN-070-BHRR

ATLANTIC Fluid Tech

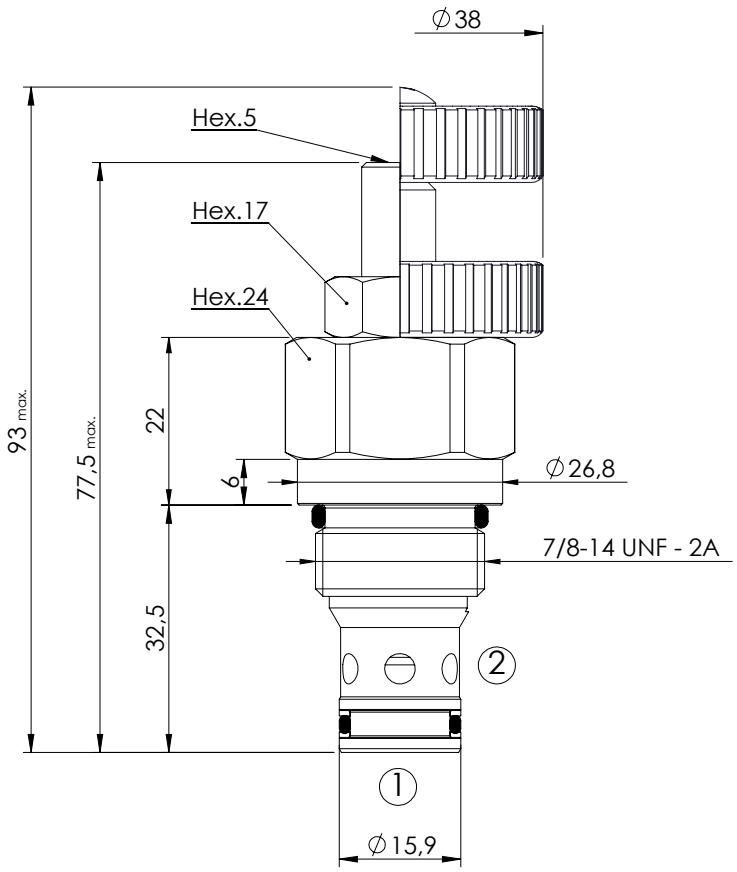

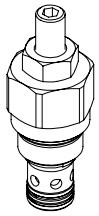

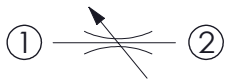

SPECIFICATIONS

Max. operating pressure:	350 bar
Rated flow:	70 l/min
Material:	Steel
Cavity:	SAE-10-2N
Weight:	0,17 kg
Seal kit:	RB700082

NOTES

Installation torque:	55-62 Nm

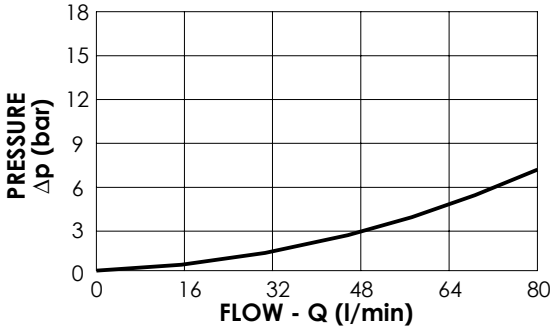

Fully open
Both directions

ADJUSTMENT OPTIONS

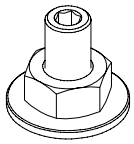

Adjustments with Screw

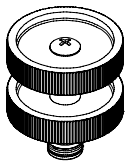

Adjustments with Handknob

ORDERING CODES

Quick code	Description	Options	
CF000136	CFSN-070-BHRR-NP-S10-N350	Adjustments with Screw	
CF000116	CFSN-070-BVRR-NP-S10-N350	Adjustments with Handknob	

HOSE BURST VALVE

CFHN-XXX-MHST

INSERT TYPE

ATLANTIC Fluid Tech

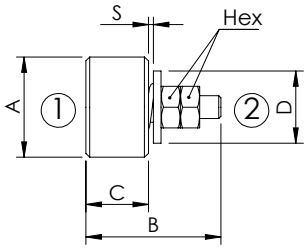

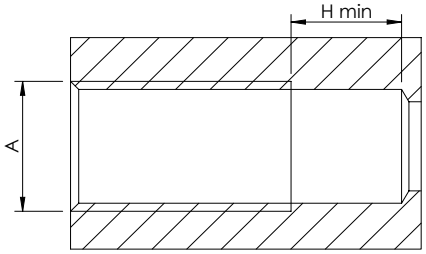

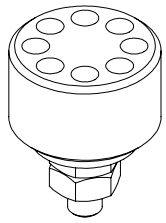

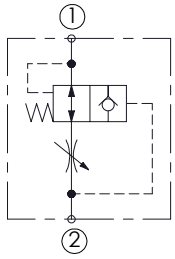

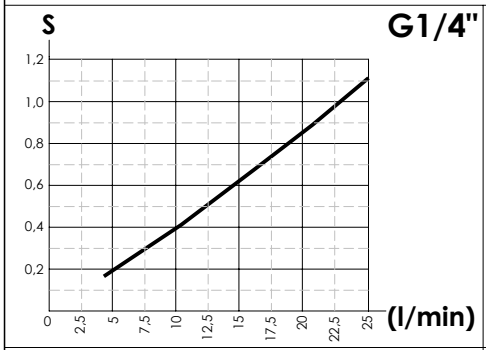

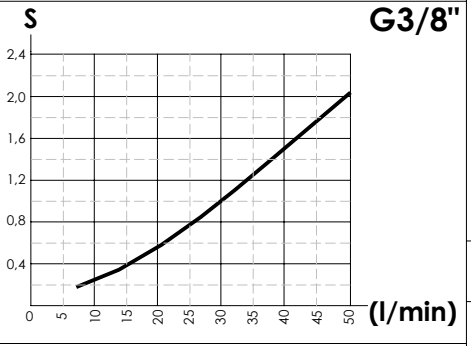

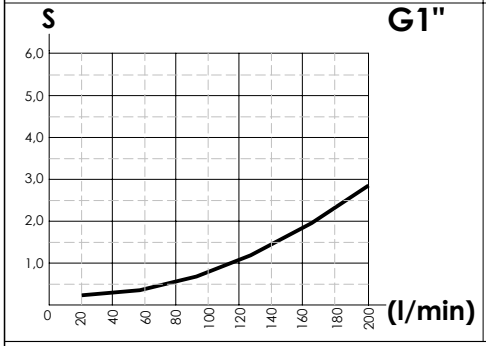

SPECIFICATIONS

Max. operating pressure: 300 bar

	Max flow (l/min)	Min flow (l/min)
G1/4"	25	4
G3/8"	50	6,3
G1/2"	80	16
G3/4"	160	25
G1"	200	80

For sleeve housing consult Accessories section

ORDERING CODES

Quick code	Description	A	B	C	D	Hex.	H
CF000348	CFHN-030-MHST-00-235	G 1/4"	17,5	8,1	9,5	5,5	11
CF000381	CFHN-050-MHST-00-234	G 3/8"	21	10,6	12,5	5,5	11
CF000379	CFHN-080-MHST-00-233	G 1/2"	25	12,1	15	7	15
CF000339	CFHN-160-MHST-00-195	G 3/4"	30,5	17,1	17,5	7	16
CF000382	CFHN-200-MHST-00-232	G 1"	38	22,1	26	7	20

FLOW REGULATOR

CFST-XXX-MDST

2 WAYS COMPENSATED INSERT TYPE

ATLANTIC Fluid Tech

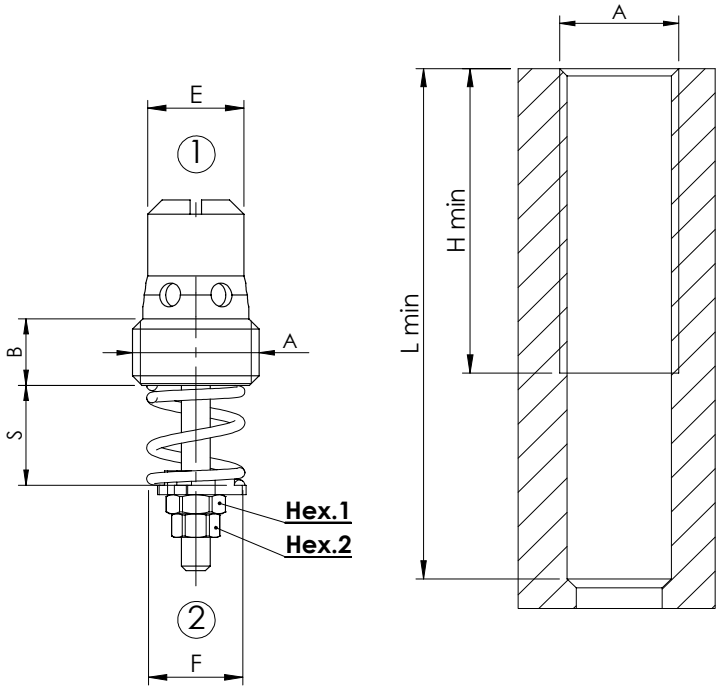

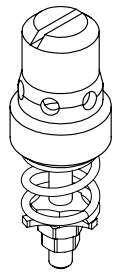

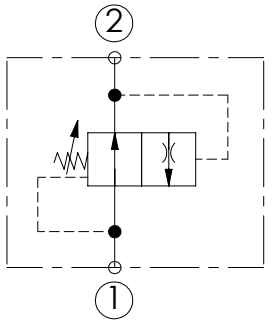

SPECIFICATIONS

Max. operating pressure: 300 bar

A	B	C	D	E	F	H min	L min	Hex.1	Hex.2	Installation torque:
G 1/4"	7	12,5	39	10	10,5	33	55	5,5	4,5	6
G 3/8"	7	13,5	43	11,5	13,5	34	60	7	6	8
G 1/2"	8	16	49	15	18	40	70	7	6	12
G 3/4"	10	21	61	20	23	51	80	7	6	15

	Max. Flow 2 → 1	Max. Flow 1 → 2
G1/4"	10	25
G3/8"	25	50
G1/2"	67	90
G3/4"	150	150

For sleeve housing consult Accessories section

1 to 2

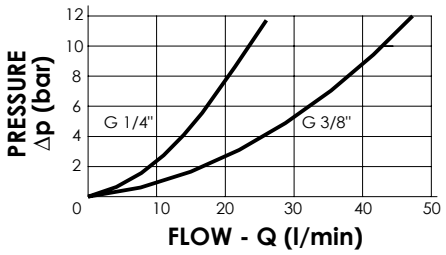

1 to 2

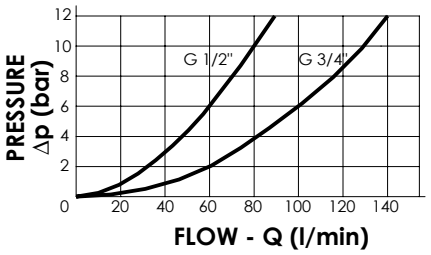

ORDERING CODES

G 1/4"		G 3/8"		G 1/2"		G 3/4"	
Quick code	Flow Range Adjustment (l/min)	Quick code	Flow Range Adjustment (l/min)	Quick code	Flow Range Adjustment (l/min)	Quick code	Flow Range Adjustment (l/min)
CF000104	1-1,6	CF000099	2,5-4	CF000093	16-21	CF000096	37-50
CF000105	1,6-2,5	CF000100	4-6,3	CF000094	21-28	CF000097	50-67
CF000106	2,5-4	CF000101	6,3-10	CF000095	28-37	CF000098	67-90
CF000107	4-6,3	CF000102	10-16	CF000081	37-50	CF000083	90-120
CF000108	6,3-10	CF000103	16-25	CF000082	50-67	CF000092	120-150

FLOW REGULATOR

CFCT-060-MHRR

3 WAYS COMBINATION ADJUSTABLE SETTING

ATLANTIC Fluid Tech

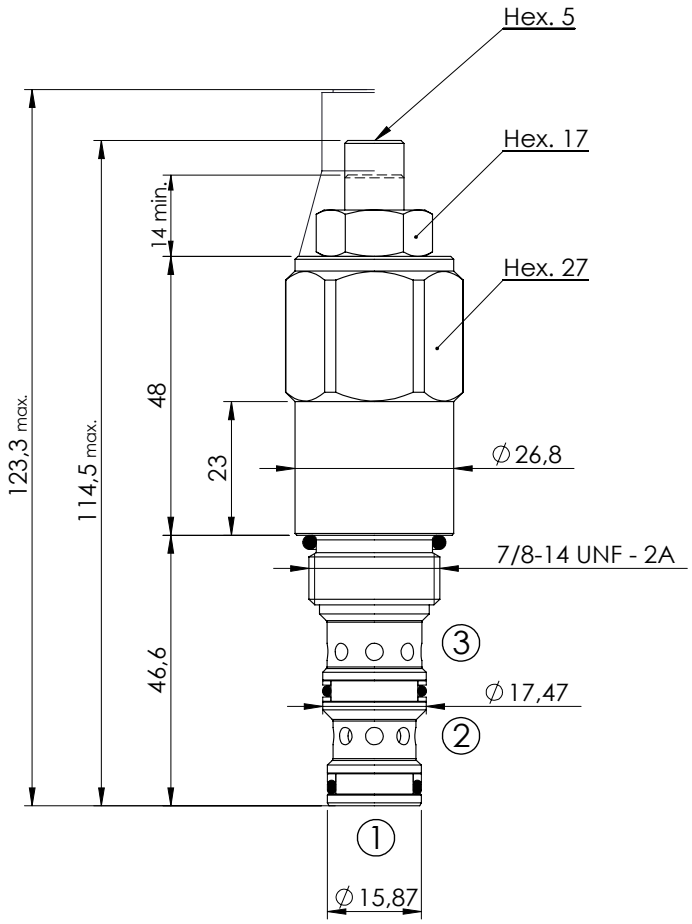

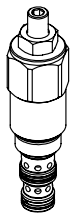

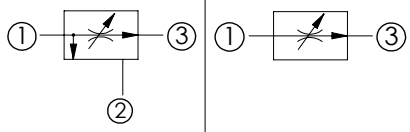

3 way application

2 way application, port 2 not connected

SPECIFICATIONS

Max. operating pressure:	350 bar
Rated flow:	60 l/min
Cavity:	SAE-10-3N
Weight:	0,28 kg

SEALING CAP

Ordering code:

AT000022

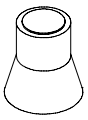

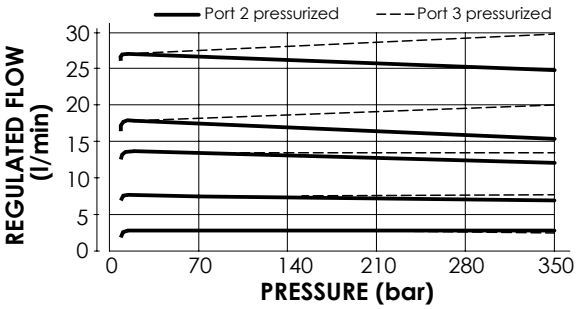

NOTES

Installation torque:	55 - 62 Nm
Seal kit:	RA700092

If port 2 is blocked the valve operates as a two way flow regulator.

Port 2 can be pressurized.

ORDERING CODES

Quick code	Description	Max. Inlet Flow (l/min)	Reg. Flow range (l/min)	Adjust. range (bar)	
CF000063	CFCT-060-MHRR-03-S10-N350	60	2,5-3,5	Screw nut locknut	
CF000149	CFCT-060-MHRR-04-S10-N350	60	3-4,5	Screw nut locknut	
CF000150	CFCT-060-MHRR-06-S10-N350	60	4,2-6,2	Screw nut locknut	
CF000006	CFCT-060-MHRR-09-S10-N350	60	5,8-9	Screw nut locknut	
CF000054	CFCT-060-MHRR-12-S10-N350	60	8,5-12	Screw nut locknut	
CF000062	CFCT-060-MHRR-16-S10-N350	60	11,5-16,5	Screw nut locknut	
CF000151	CFCT-060-MHRR-23-S10-N350	60	15,5-22,5	Screw nut locknut	
CF000152	CFCT-060-MHRR-30-S10-N350	60	20-29,5	Screw nut locknut	
CF000057	CFCT-060-MHRR-32-S10-N350	60	26,5-35,5	Screw nut locknut	

FLOW REGULATOR

CFPT-140-MVRR

3 WAYS COMBINATION ADJUSTABLE SETTING

ATLANTIC Fluid Tech

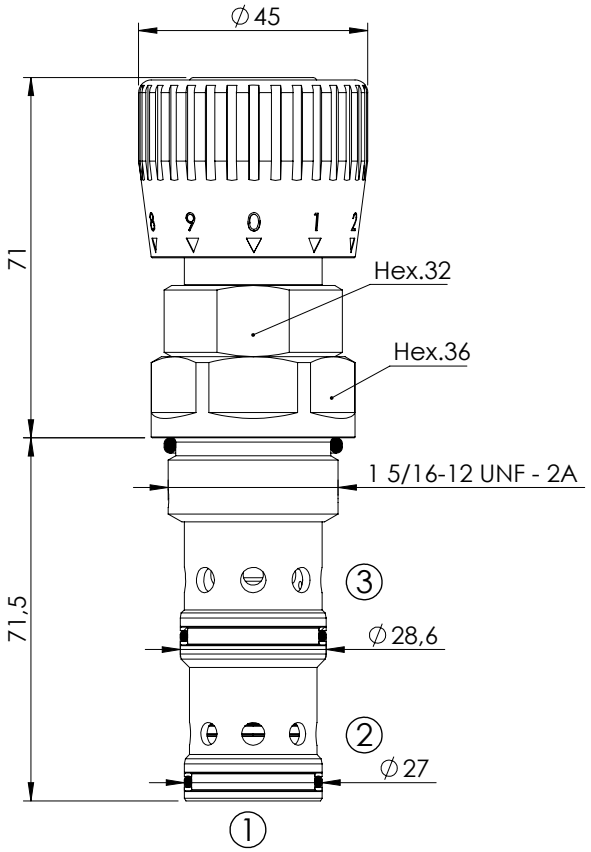

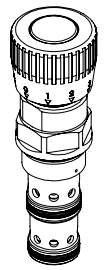

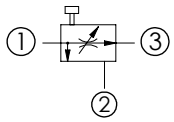

3 way application

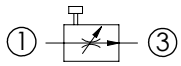

2 way application, port 2 not connected

SPECIFICATIONS

Max. operating pressure:	350 bar
Division or combination:	140 l/min
Cavity:	SAE-16-3N
Weight:	0,7 kg
Seal kit:	RB700094

ADJUSTMENT TYPE

Graduated handknob for flow regulation under pressure

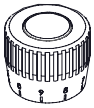

NOTES

Installation torque: 118 - 132 Nm

If port 2 is blocked the valve operates as a two way flow regulator.
Port 2 can be pressurized.

The washer is used to indicate the zero.

Ordering code:
SV000083

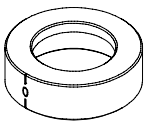

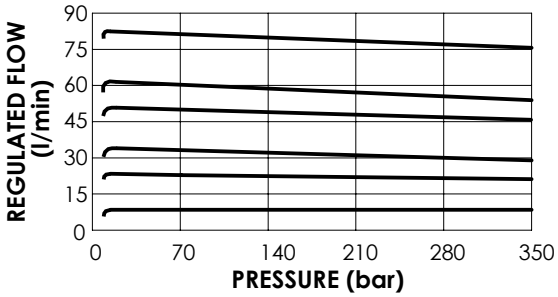

ORDERING CODES

Quick code	Description	Regulated flow range (l/min)	Adjustment option
CF000310	CFPT-140-MVRR-15-S16-N350	0 - 15	Graduated handknob
CF000311	CFPT-140-MVRR-25-S16-N350	0 - 25	Graduated handknob
CF000312	CFPT-140-MVRR-35-S16-N350	0 - 35	Graduated handknob
CF000313	CFPT-140-MVRR-50-S16-N350	0 - 50	Graduated handknob
CF000314	CFPT-140-MVRR-65-S16-N350	0 - 65	Graduated handknob
CF000315	CFPT-140-MVRR-80-S16-N350	0 - 80	Graduated handknob

FLOW REGULATOR

MFST-030-RVTR

2 WAYS COMPENSATED

ATLANTIC Fluid Tech

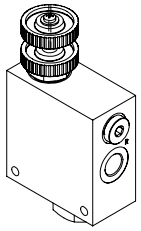

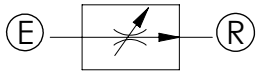

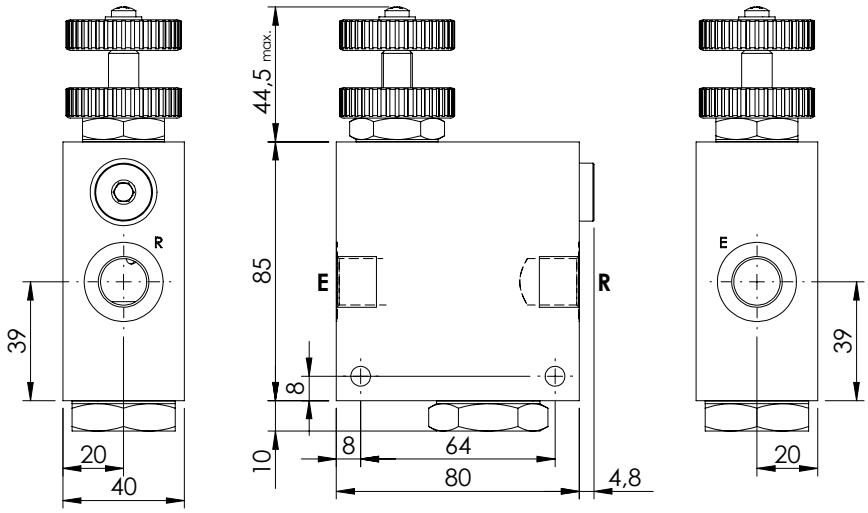

SPECIFICATIONS

Max. operating pressure:	See table
Rated flow:	30 l/min
Manifold:	Aluminium/Steel
Weight:	0,95/1,39 kg

ADJUSTMENT OPTIONS

Handknob and locknut

Screw and locknut

Graduated handknob

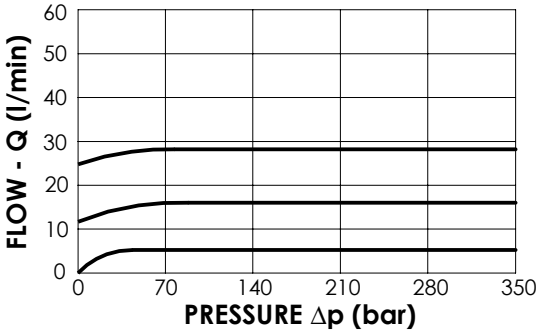

NOTES

Regulation: FINE

ORDERING CODES

Quick code	Description	Main ports size	Manifold	Max. Pressure (Bar)	Max. inlet flow (l/min)	Adjustment options
MF000241	MFST-030-RVTR-30-G38-N210	E,R: **G 3/8"**	Aluminium	210	30	Handknob and locknut
MF000242	MFST-030-RHTR-30-G38-N210	E,R: **G 3/8"**	Aluminium	210	30	Screw and locknut
MF000243	MFST-030-RMTR-30-G38-N210	E,R: **G 3/8"**	Aluminium	210	30	Graduated handknob
MF000244	MFST-030-RVSR-30-G38-N350	E,R: **G 3/8"**	Steel	350	30	Handknob and locknut
MF000245	MFST-030-RHSR-30-G38-N350	E,R: **G 3/8"**	Steel	350	30	Screw and locknut
MF000246	MFST-030-RMSR-30-G38-N350	E,R: **G 3/8"**	Steel	350	30	Graduated handknob

FLOW REGULATOR

MFST-055-TVTR

2 WAYS COMPENSATED

ATLANTIC Fluid Tech

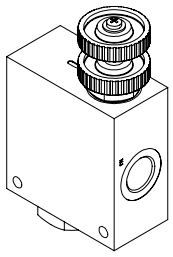

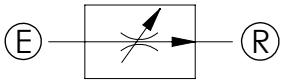

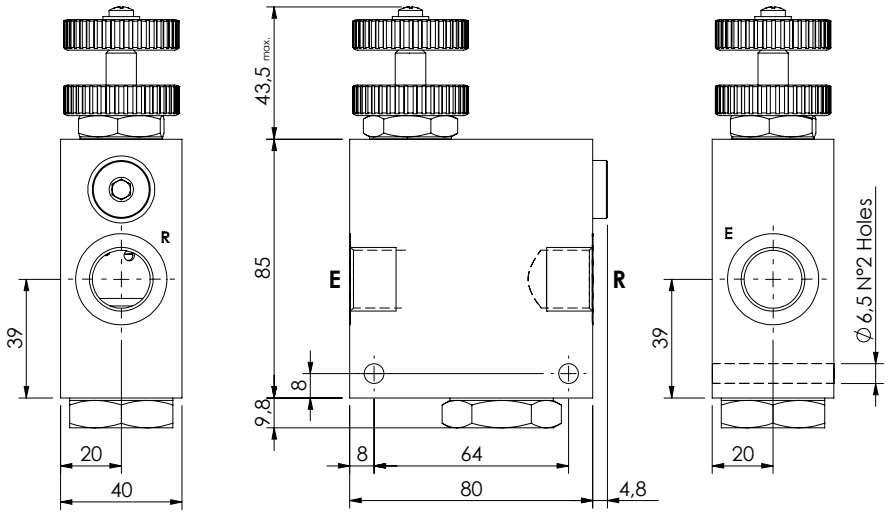

SPECIFICATIONS

Max. operating pressure:	See table
Rated flow:	55 l/min
Manifold:	Aluminium/Steel
Weight:	0,94/2,01 kg

ADJUSTMENT OPTIONS

Handknob and locknut

Screw and locknut

Graduated handknob

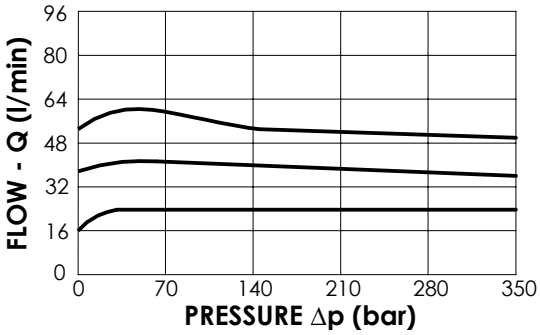

NOTES

Regulation: FINE

ORDERING CODES

Quick code	Description	Main ports size	Manifold	Max. Pressure (Bar)	Max. inlet flow (l/min)	Adjustment options
MF000052	MFST-055-RVTR-55-G12-N210	E,R: **G 1/2"**	Aluminium	210	55	Handknob and locknut
MF000238	MFST-055-RHTR-55-G12-N210	E,R: **G 1/2"**	Aluminium	210	55	Screw and locknut
MF000106	MFST-055-RMTR-55-G12-N210	E,R: **G 1/2"**	Aluminium	210	55	Graduated handknob
MF000148	MFST-055-RVSR-55-G12-N350	E,R: **G 1/2"**	Steel	350	55	Handknob and locknut
MF000239	MFST-055-RHSR-55-G12-N350	E,R: **G 1/2"**	Steel	350	55	Screw and locknut
MF000240	MFST-055-RMSR-55-G12-N350	E,R: **G 1/2"**	Steel	350	55	Graduated handknob

FLOW REGULATOR

MFST-090-RPZR

2 WAYS COMPENSATED

ATLANTIC Fluid Tech

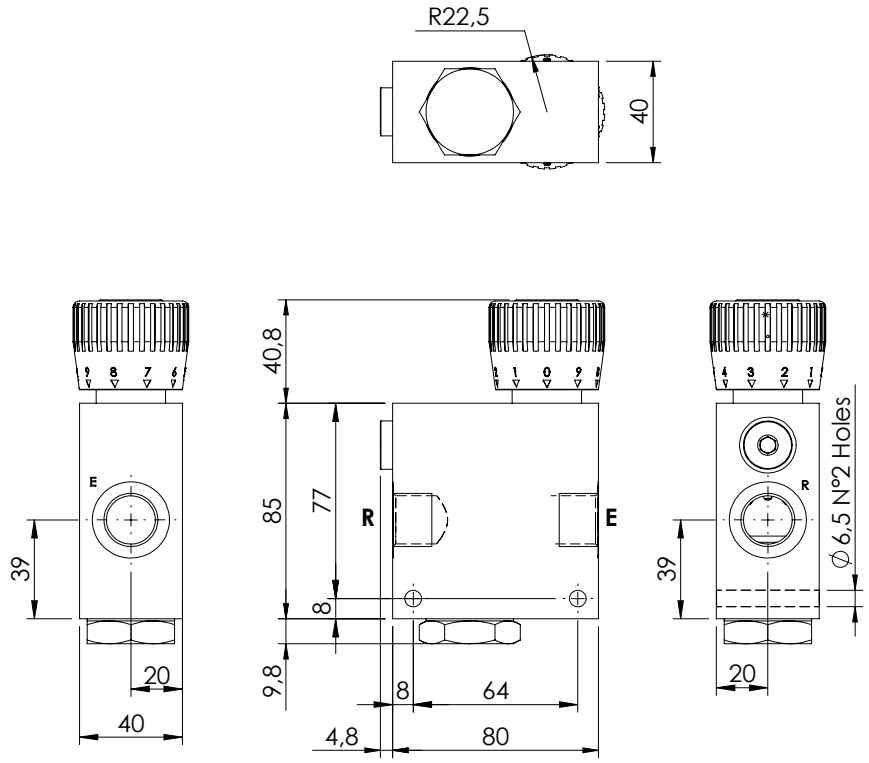

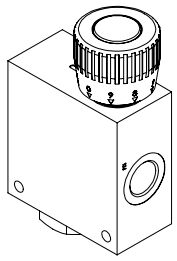

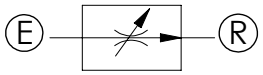

SPECIFICATIONS

Max. operating pressure:	210 bar
Rated flow:	90 l/min
Manifold:	Aluminium
Weight:	0,93 kg

ADJUSTMENT TYPE

Graduated handknob for flow regulation under pressure

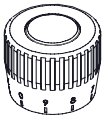

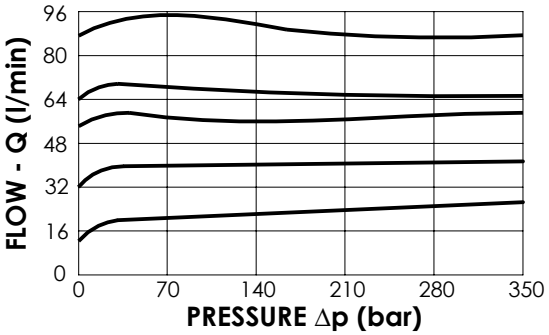

ORDERING CODES

Quick code	Description	Main ports size	Regulated flow range (l/min)	Adjustment type
MF000186	MFST-090-RPZR-06-G12-N210	G 1/2"	0 - 6	Graduated handknob
MF000187	MFST-090-RPZR-12-G12-N210	G 1/2"	0 - 12	Graduated handknob
MF000188	MFST-090-RPZR-25-G12-N210	G 1/2"	0 - 25	Graduated handknob
MF000189	MFST-090-RPZR-32-G12-N210	G 1/2"	0 - 32	Graduated handknob
MF000190	MFST-090-RPZR-50-G12-N210	G 1/2"	0 - 50	Graduated handknob
MF000191	MFST-090-RPZR-63-G12-N210	G 1/2"	0 - 63	Graduated handknob

FLOW REGULATOR

MFST-090-RVTR

2 WAYS COMPENSATED

ATLANTIC Fluid Tech

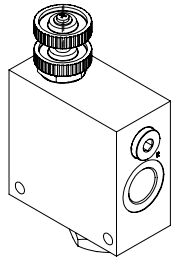

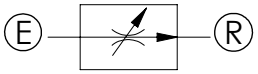

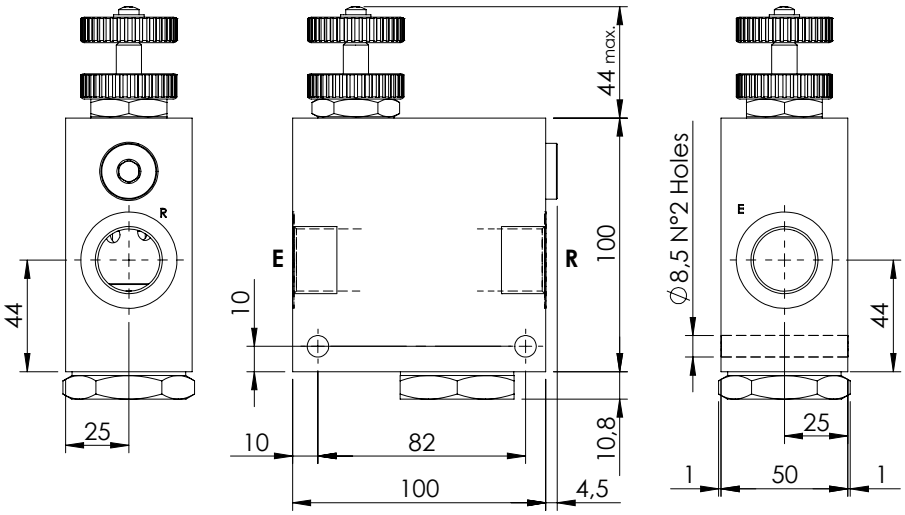

SPECIFICATIONS

Max. operating pressure:	See table
Rated flow:	90 l/min
Manifold:	Aluminium/Steel
Weight:	1,66/ 3,6 kg

ADJUSTMENT OPTIONS

Handknob and locknut	Screw and locknut	Graduated handknob

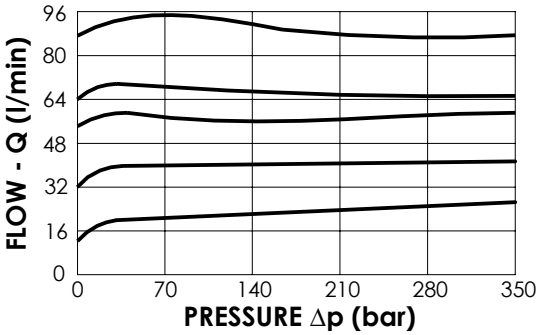

NOTES

Regulation: STANDARD

ORDERING CODES

Quick code	Description	Main ports size	Manifold	Max. pressure (Bar)	Max. inlet flow (l/min)	Adjustment options
MF000042	MFST-090-RVTR-90-G34-N210	E,R: G 3/4"	Aluminium	210	90	Handknob and locknut
MF000234	MFST-090-RHTR-90-G34-N210	E,R: G 3/4"	Aluminium	210	90	Screw and locknut
MF000235	MFST-090-RMTR-90-G34-N210	E,R: G 3/4"	Aluminium	210	90	Graduated handknob
MF000139	MFST-090-RVSR-90-G34-N350	E,R: G 3/4"	Steel	350	90	Handknob and locknut
MF000236	MFST-090-RHSR-90-G34-N350	E,R: G 3/4"	Steel	350	90	Screw and locknut
MF000237	MFST-090-RMSR-90-G34-N350	E,R: G 3/4"	Steel	350	90	Graduated handknob

FLOW REGULATOR

MFST-190-RVTR

2 WAYS COMPENSATED

ATLANTIC Fluid Tech

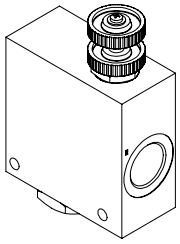

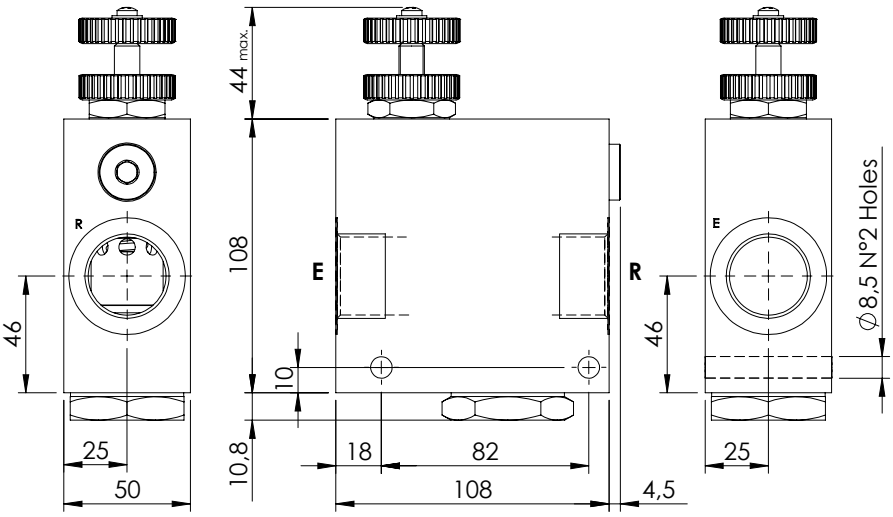

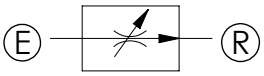

SPECIFICATIONS

Max. operating pressure:	210/350 bar
Rated flow:	190 l/min
Manifold:	Aluminium/Steel
Weight:	1,8/4,0 kg

ADJUSTMENT OPTIONS

Handknob and locknut

Screw and locknut

Graduated handknob

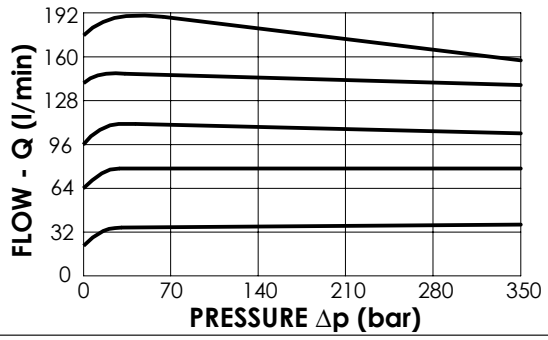

NOTES

Regulation: STANDARD

ORDERING CODES

Quick code	Description	Main ports size	Manifold	Max. Pressure (Bar)	Max. inlet flow (l/min)	Adjustment options
MF000253	MFST-190-RVTR-19-G10-N210	E,R: G 1"	Aluminium	210	190	Handknob and locknut
MF000254	MFST-190-RHTR-19-G10-N210	E,R: G 1"	Aluminium	210	190	Screw and locknut
MF000255	MFST-190-RMTR-19-G10-N210	E,R: G 1"	Aluminium	210	190	Graduated handknob
MF000256	MFST-190-RVSR-19-G10-N350	E,R: G 1"	Steel	350	190	Handknob and locknut
MF000257	MFST-190-RHSR-19-G10-N350	E,R: G 1"	Steel	350	190	Screw and locknut
MF000258	MFST-190-RMSR-19-G10-N350	E,R: G 1"	Steel	350	190	Graduated handknob

FLOW REGULATOR

MFST-055-VVTR

2 WAYS COMPENSATED WITH CHECK VALVE

ATLANTIC Fluid Tech

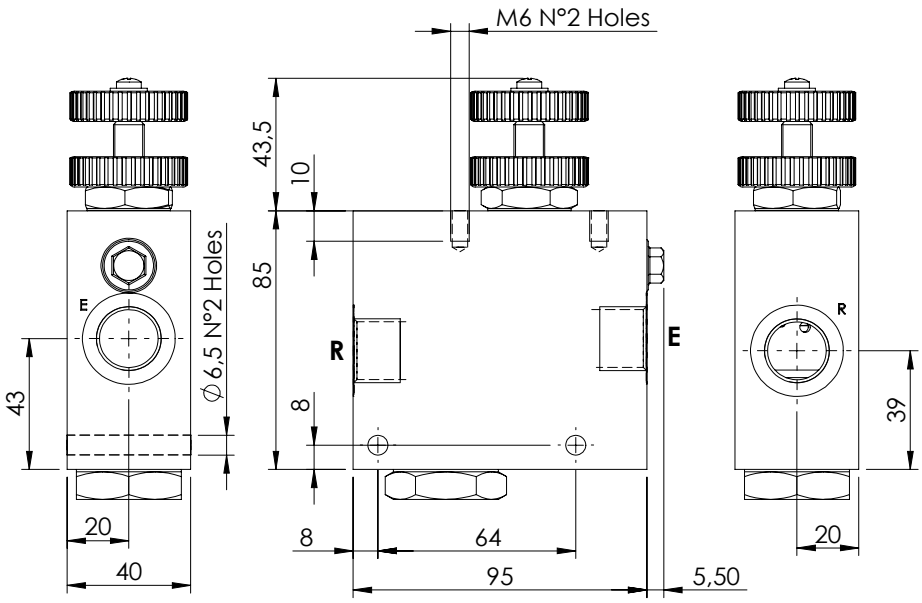

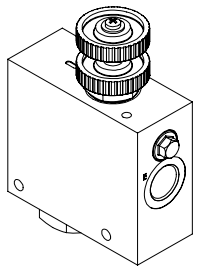

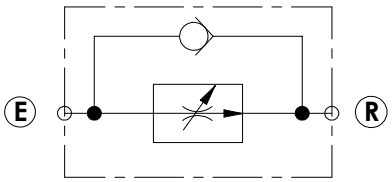

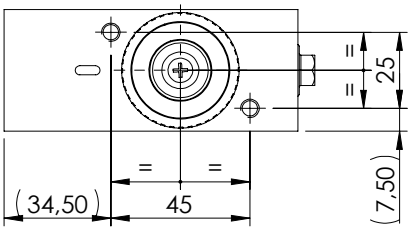

SPECIFICATIONS

Max. operating pressure:	210 bar
Rated flow:	55 l/min
Manifold:	Aluminium
Weight:	1,06 kg

ADJUSTMENT OPTIONS

Handknob and locknut

Screw and locknut

Graduated handknob

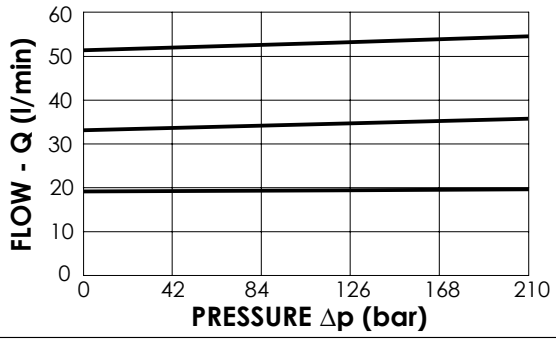

NOTES

Regulating: FINE

ORDERING CODES

Quick code	Description	Main ports size	Max. inlet flow (l/min)	Adjustment options	
MF000131	MFST-055-VVTR-55-G12-N210	G 1/2"	55	Handknob and locknut	
MF000375	MFST-055-VHTR-55-G12-N210	G 1/2"	55	Screw and locknut	
MF000146	MFST-055-VMTR-55-G12-N210	G 1/2"	55	Graduated handknob	

FLOW REGULATOR

MFCT-055-RVTR

3 WAYS COMPENSATED

ATLANTIC Fluid Tech

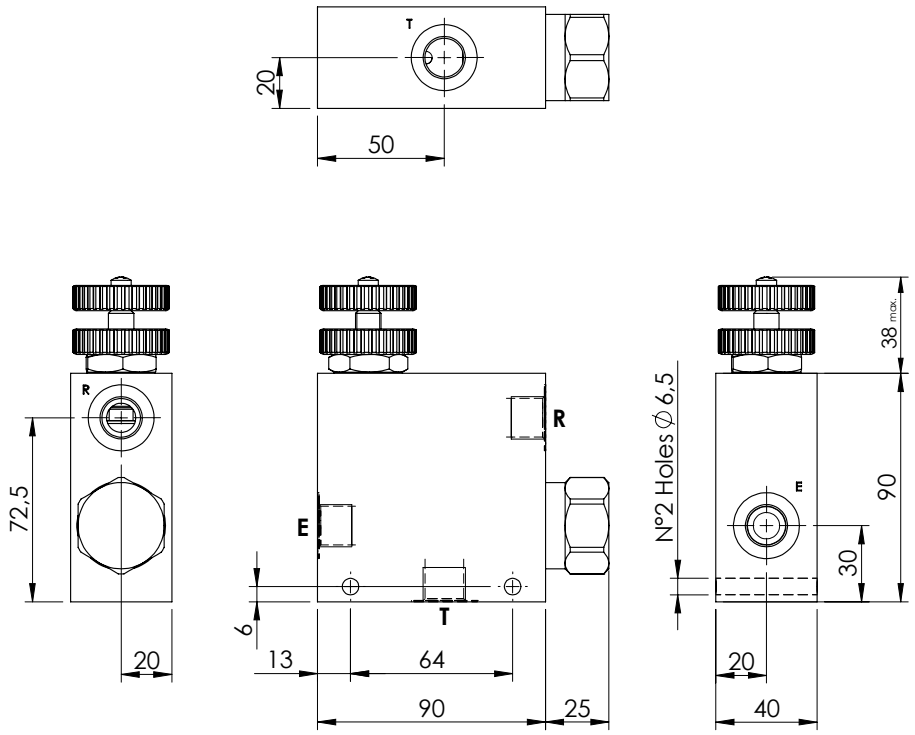

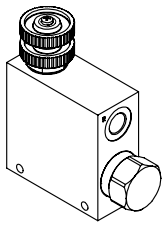

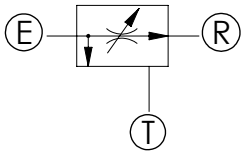

SPECIFICATIONS

Max. operating pressure:	see table
Rated flow:	55 l/min
Manifold:	Aluminium/Steel
Weight:	1,12/2,48 kg

ADJUSTMENT OPTIONS

Handknob and locknut

Screw and locknut

Graduated handknob

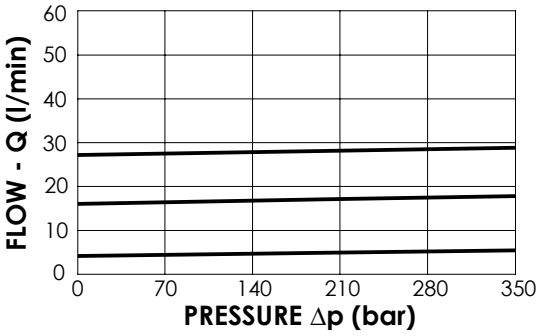

NOTES

Regulation sensitivity: FINE

ORDERING CODES

Quick code	Description	Main ports size	Manifold	Max. Pressure (Bar)	Max. reg.flow (l/min)	Max. inlet flow (l/min)	Adjustment options
MF000008	MFCT-055-RVTR-30-G38-N210	G 3/8"	Aluminium	210	30	55	Handknob and locknut
MF000009	MFCT-055-RHTR-30-G38-N210	G 3/8"	Aluminium	210	30	55	Screw and locknut
MF000010	MFCT-055-RMTR-30-G38-N210	G 3/8"	Aluminium	210	30	55	Graduated handknob
MF000089	MFCT-055-RVSR-30-G38-N350	G 3/8"	Steel	350	30	55	Handknob and locknut
MF000090	MFCT-055-RHSR-30-G38-N350	G 3/8"	Steel	350	30	55	Screw and locknut
MF000091	MFCT-055-RMSR-30-G38-N350	G 3/8"	Steel	350	30	55	Graduated handknob

FLOW REGULATOR

MFCT-090-RVTR

3 WAYS COMPENSATED

ATLANTIC Fluid Tech

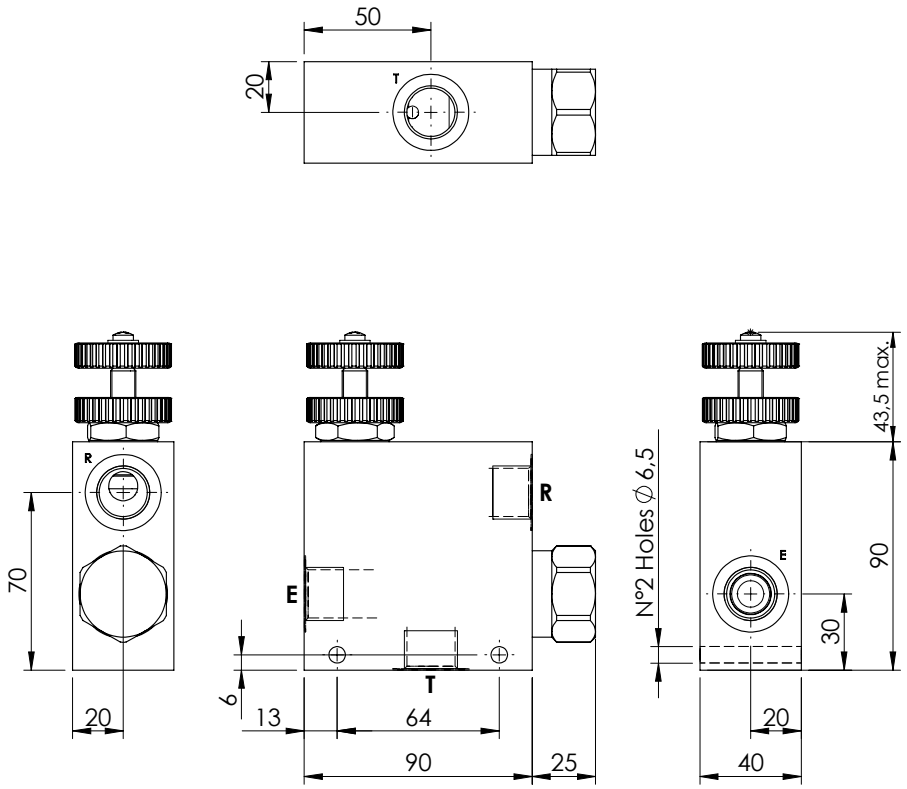

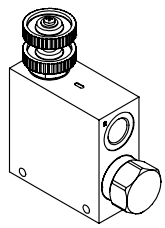

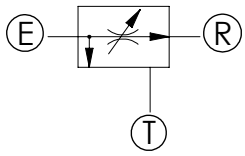

SPECIFICATIONS

Max. operating pressure:	see table
Rated flow:	90 l/min
Manifold:	Aluminium/Steel
Weight:	1,11/2,45 kg

ADJUSTMENT OPTIONS

Handknob and locknut

Screw and locknut

Graduated handknob

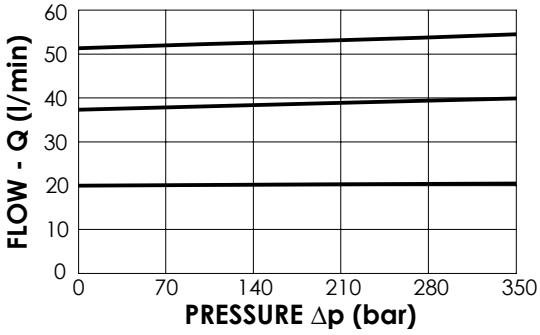

NOTES

Regulation: FINE

ORDERING CODES

Quick code	Description	Main ports size	Manifold	Max. Pressure (Bar)	Max. reg.flow (l/min)	Max. inlet flow (l/min)	Adjustment options
MF000015	MFCT-090-RVTR-55-G12-N210	G 1/2"	Aluminium	210	55	90	Handknob and locknut
MF000016	MFCT-090-RHTR-55-G12-N210	G 1/2"	Aluminium	210	55	90	Screw and locknut
MF000014	MFCT-090-RMTR-55-G12-N210	G 1/2"	Aluminium	210	55	90	Graduated handknob
MF000095	MFCT-090-RVSR-55-G12-N350	G 1/2"	Steel	350	55	90	Handknob and locknut
MF000096	MFCT-090-RHSR-55-G12-N350	G 1/2"	Steel	350	55	90	Screw and locknut
MF000097	MFCT-090-RMSR-55-G12-N350	G 1/2"	Steel	350	55	90	Graduated handknob

FLOW REGULATOR

MFCT-090-RPZR

3 WAYS COMPENSATED

ATLANTIC Fluid Tech

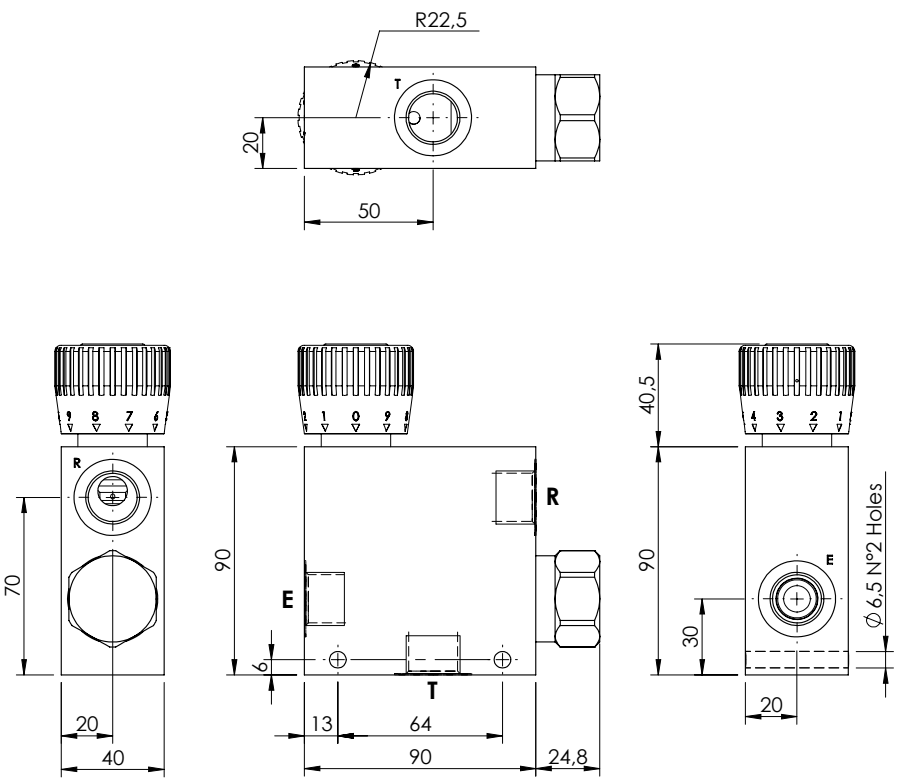

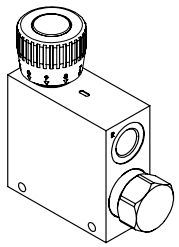

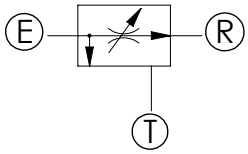

SPECIFICATIONS

Max. operating pressure:	210 bar
Rated flow:	90 l/min
Manifold:	Aluminium
Weight:	0,93 kg

ADJUSTMENT TYPE

Graduated handknob for flow regulation under pressure

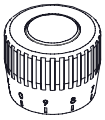

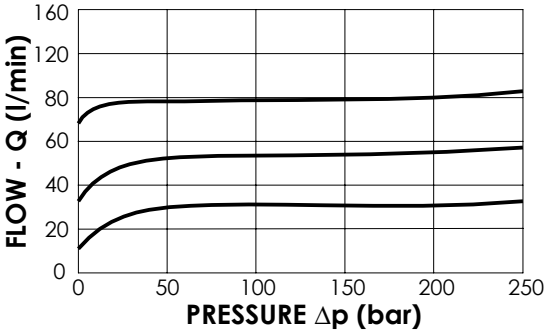

ORDERING CODES

Quick code	Description	Main ports size	Regulated flow range (l/min)	Adjustment type
MF000194	MFCT-090-RPZR-06-G12-N210	G 1/2"	0 - 6	Graduated handknob
MF000195	MFCT-090-RPZR-12-G12-N210	G 1/2"	0 - 12	Graduated handknob
MF000196	MFCT-090-RPZR-25-G12-N210	G 1/2"	0 - 25	Graduated handknob
MF000197	MFCT-090-RPZR-32-G12-N210	G 1/2"	0 - 32	Graduated handknob
MF000198	MFCT-090-RPZR-50-G12-N210	G 1/2"	0 - 50	Graduated handknob
MF000199	MFCT-090-RPZR-63-G12-N210	G 1/2"	0 - 63	Graduated handknob
MF000200	MFCT-090-RPZR-70-G12-N210	G 1/2"	0 - 70	Graduated handknob
MF000201	MFCT-090-RPZR-80-G12-N210	G 1/2"	0 - 80	Graduated handknob

FLOW REGULATOR

MFCT-150-RVTR

3 WAYS COMPENSATED

ATLANTIC Fluid Tech

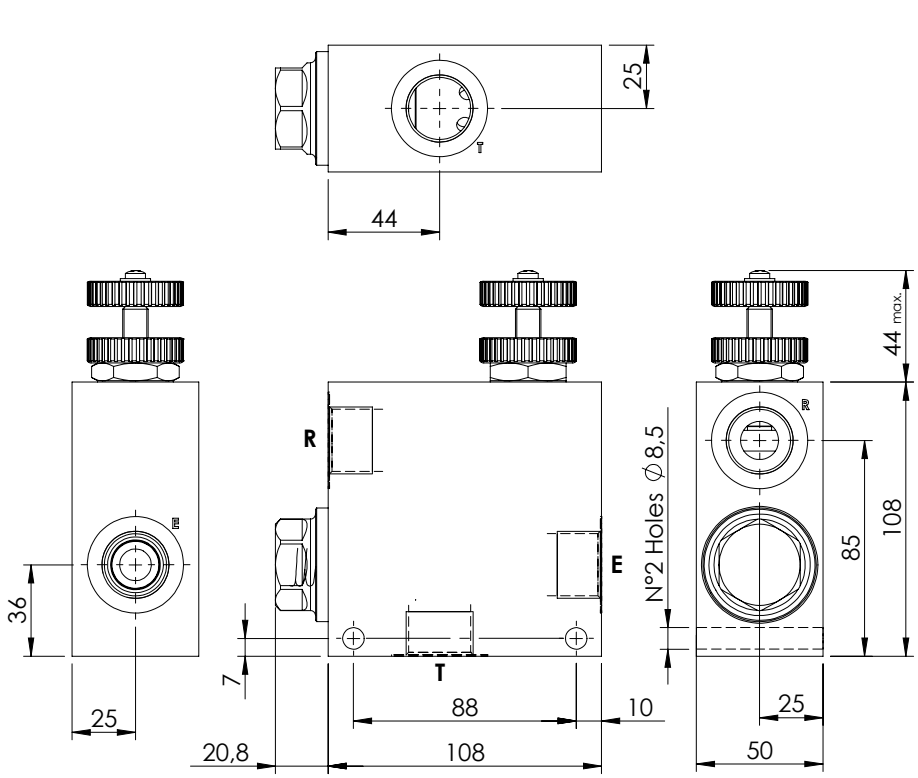

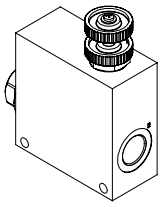

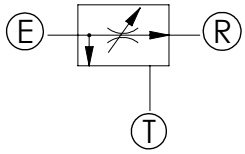

SPECIFICATIONS

Max. operating pressure:	see table
Rated flow:	150 l/min
Manifold:	Aluminium/Steel
Weight:	1,79/4,23 kg

ADJUSTMENT OPTIONS

Handknob and locknut

Screw and locknut

Graduated handknob

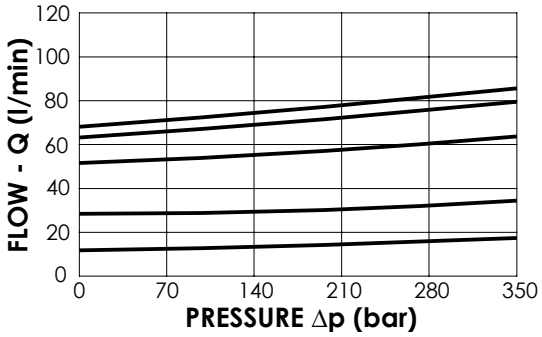

NOTES

Regulation: STANDARD

ORDERING CODES

Quick code	Description	Main ports size	Manifold	Max. Pressure (Bar)	Max. reg.flow (l/min)	Max. inlet flow (l/min)	Adjustment options
MF000031	MFCT-150-RVTR-90-G34-N210	G 3/4"	Aluminium	210	90	150	Handknob and locknut
MF000032	MFCT-150-RHTR-90-G34-N210	G 3/4"	Aluminium	210	90	150	Screw and locknut
MF000033	MFCT-150-RMTR-90-G34-N210	G 3/4"	Aluminium	210	90	150	Graduated handknob
MF000023	MFCT-150-RVSR-90-G34-N350	G 3/4"	Steel	350	90	150	Handknob and locknut
MF000024	MFCT-150-RHSR-90-G34-N350	G 3/4"	Steel	350	90	150	Screw and locknut
MF000025	MFCT-150-RMSR-90-G34-N350	G 3/4"	Steel	350	90	150	Graduated handknob

FLOW REGULATOR

MFCT-280-RVTR

3 WAYS COMPENSATED

ATLANTIC Fluid Tech

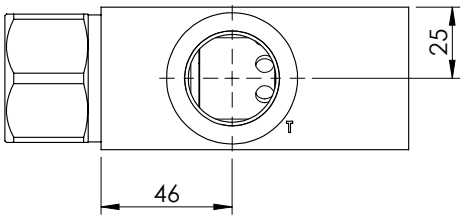

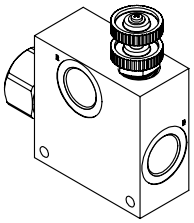

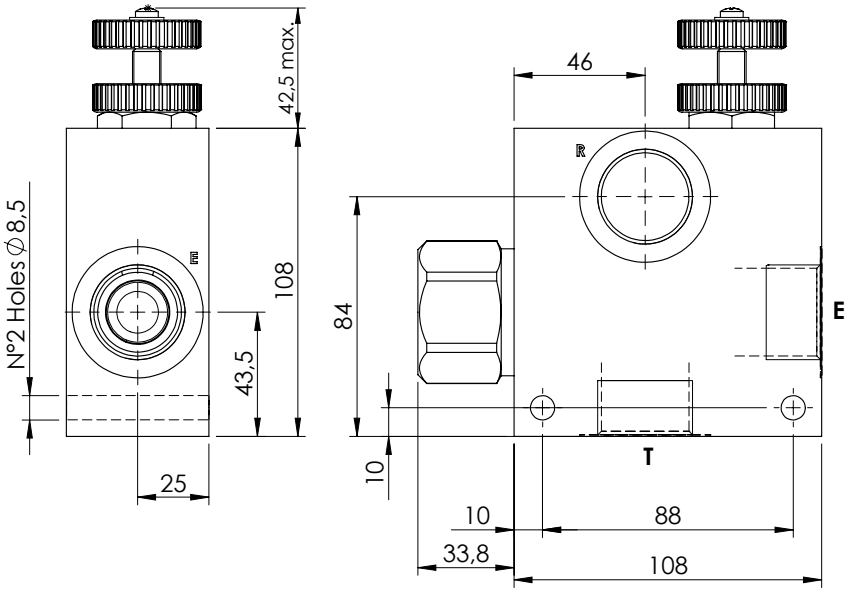

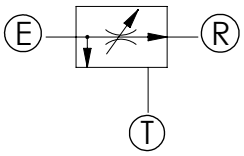

SPECIFICATIONS

Max. operating pressure:	see table
Rated flow:	280 l/min
Manifold:	Aluminium/Steel
Weight:	1,97/4,08 kg

ADJUSTMENT OPTIONS

Handknob and locknut

Screw and locknut

Graduated handknob

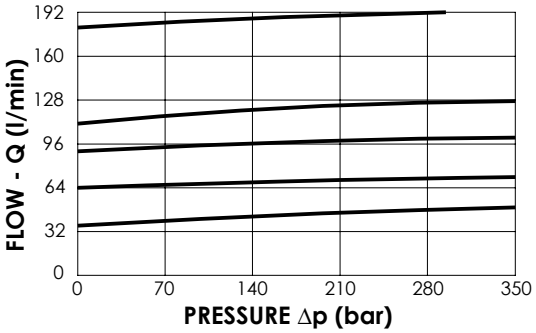

NOTES

Regulating: STANDARD

ORDERING CODES

Quick code	Description	Main ports size	Manifold	Max. Pressure (Bar)	Max. reg.flow (l/min)	Max. inlet flow (l/min)	Adjustment options
MF000035	MFCT-280-RVTR-19-G10-N210	G 1"	Aluminium	210	190	280	Handknob and locknut
MF000036	MFCT-280-RHTR-19-G10-N210	G 1"	Aluminium	210	190	280	Screw and locknut
MF000037	MFCT-280-RMTR-19-G10-N210	G 1"	Aluminium	210	190	280	Graduated handknob
MF000026	MFCT-280-RVSR-19-G10-N350	G 1"	Steel	350	190	280	Handknob and locknut
MF000027	MFCT-280-RHSR-19-G10-N350	G 1"	Steel	350	190	280	Screw and locknut
MF000028	MFCT-280-RMSR-19-G10-N350	G 1"	Steel	350	190	280	Graduated handknob

FLOW REGULATOR

MFPT-090-RVTR

PRESSURE COMPENSATED PRIORITY FLOW REGULATOR

ATLANTIC Fluid Tech

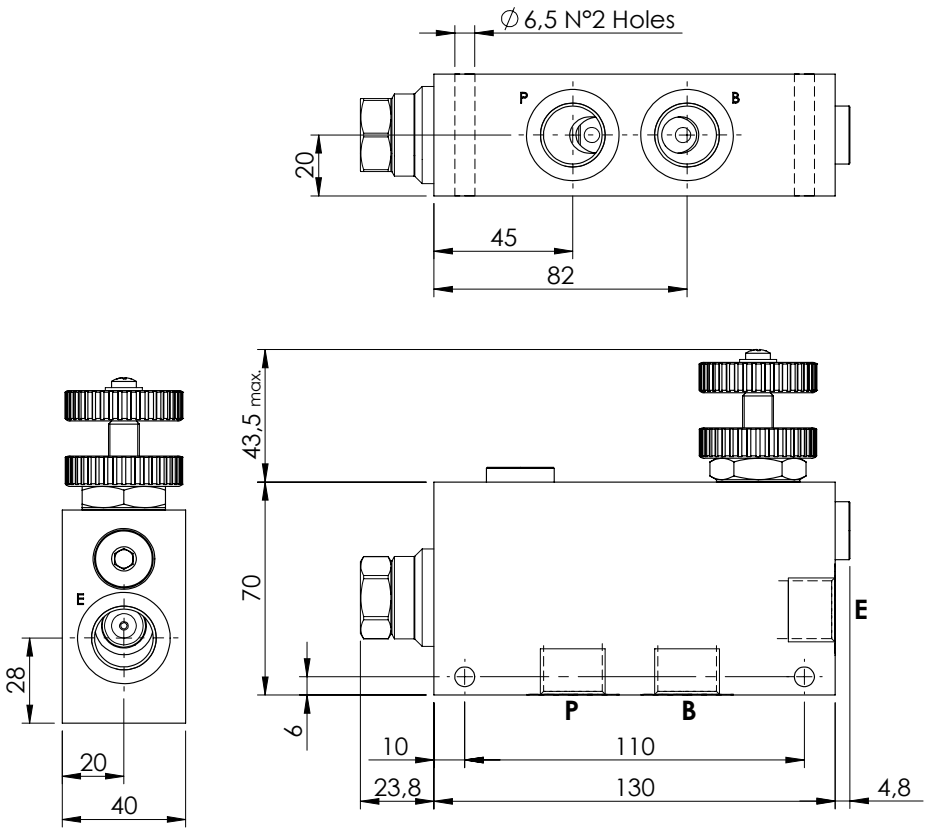

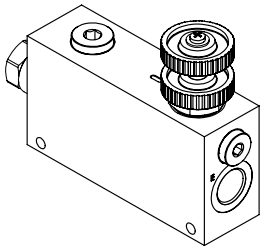

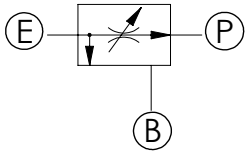

SPECIFICATIONS

Max. operating pressure:	210 bar
Rated flow:	90 l/min
Manifold:	Aluminium
Weight:	1,2 kg

ADJUSTMENT OPTIONS

Handknob and locknut

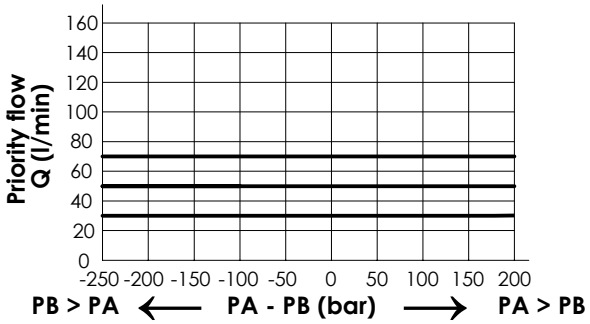

NOTES

ORDERING CODES

Quick code	Description	Main ports size	Max. inlet flow (l/min)	Max. regulated flow (l/min)	Adjustment options
MF000121	MFPT-090-RVTR-70-G12-N210	E,P,T: G1/2"	90 l/min	70 l/min	Handknob and locknut
MF000136	MFPT-090-RVTR-70-G38-N210	E,P,T: G3/8"	90 l/min	70 l/min	Handknob and locknut

FLOW REGULATOR

MFPT-090-RPZR

PRESSURE COMPENSATED PRIORITY FLOW REGULATOR

ATLANTIC Fluid Tech

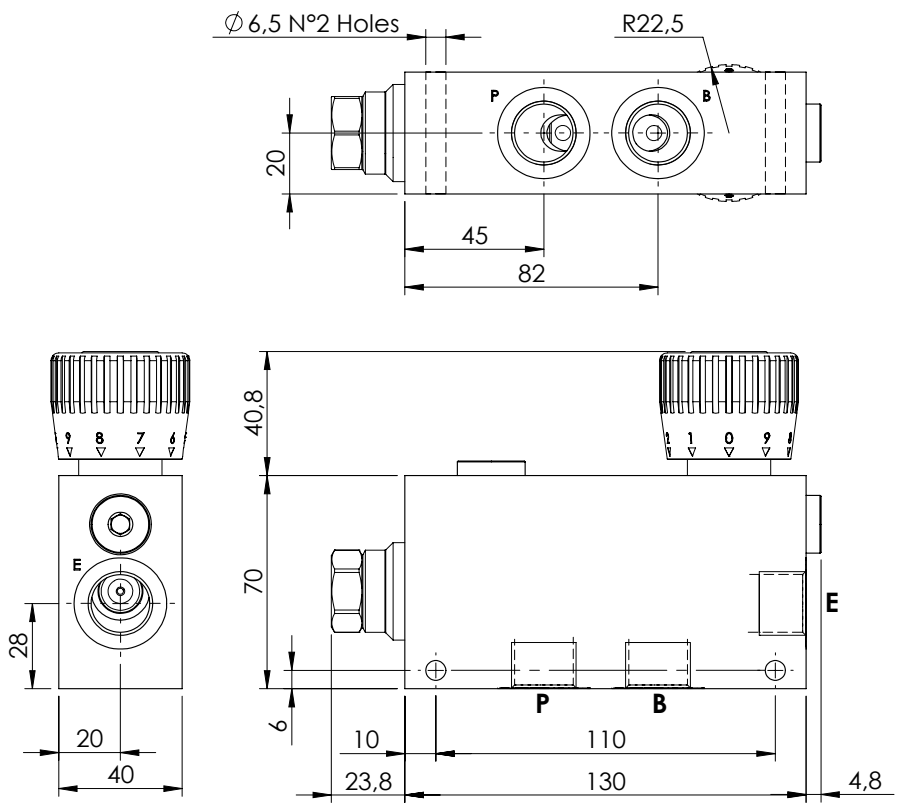

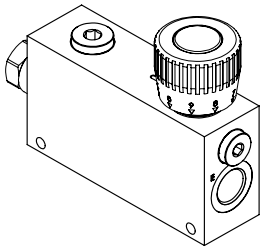

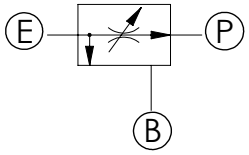

SPECIFICATIONS

Max. operating pressure:	210 bar
Rated flow:	90 l/min
Manifold:	Aluminium
Weight:	1,3 kg

ADJUSTMENT TYPE

Graduated handknob for flow regulation under pressure

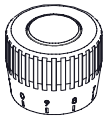

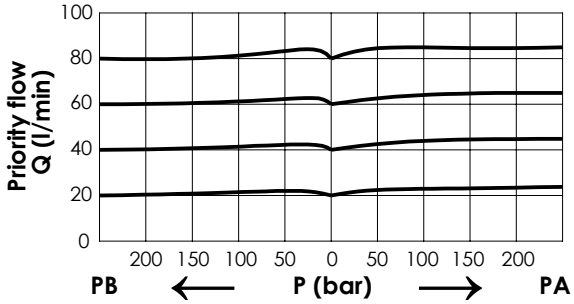

ORDERING CODES

Quick code	Description	Main ports size	Regulated flow range (l/min)	Adjustment type
MF000211	MFPT-090-RPZR-12-G12-N210	G 1/2"	0 - 12	Graduated handknob
MF000212	MFPT-090-RPZR-25-G12-N210	G 1/2"	0 - 25	Graduated handknob
MF000213	MFPT-090-RPZR-32-G12-N210	G 1/2"	0 - 32	Graduated handknob
MF000214	MFPT-090-RPZR-50-G12-N210	G 1/2"	0 - 50	Graduated handknob
MF000215	MFPT-090-RPZR-63-G12-N210	G 1/2"	0 - 63	Graduated handknob
MF000216	MFPT-090-RPZR-70-G12-N210	G 1/2"	0 - 70	Graduated handknob
MF000217	MFPT-090-RPZR-80-G12-N210	G 1/2"	0 - 80	Graduated handknob

FLOW REGULATOR

MFCT-090-RVTN

3 WAYS COMPENSATED FLOW REGULATOR

ATLANTIC Fluid Tech

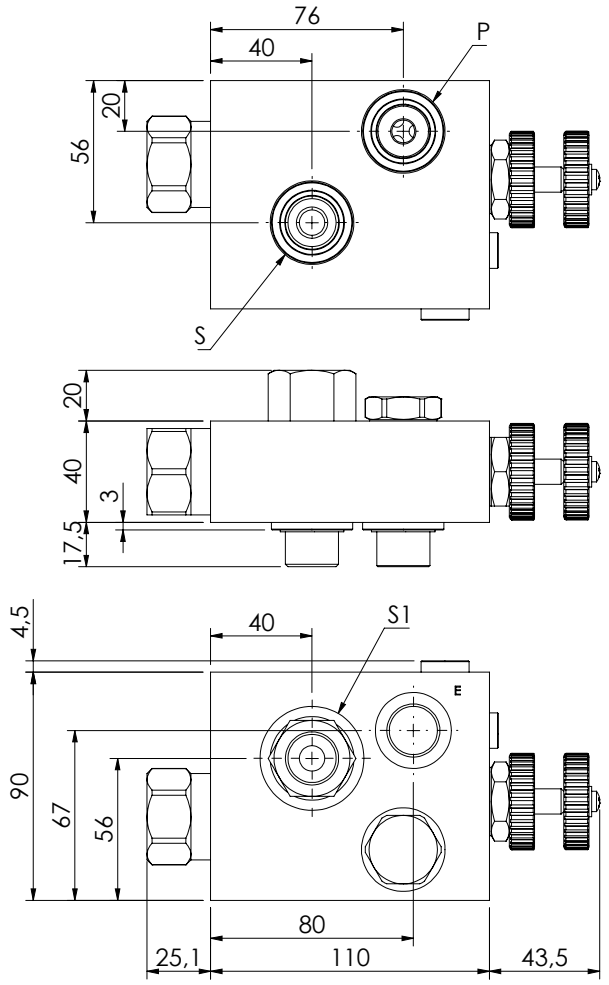

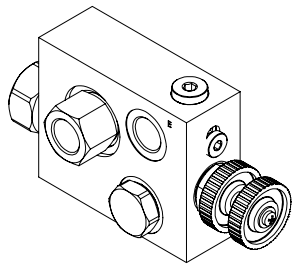

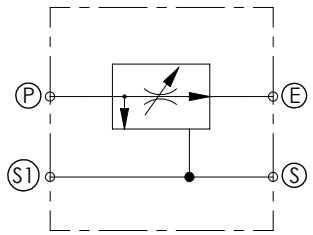

SPECIFICATIONS

Max. operating pressure:	210 bar
Rated flow:	90 l/min
Manifold:	Aluminium
Weight:	1,65 kg

ADJUSTMENT OPTIONS

Handknob and locknut

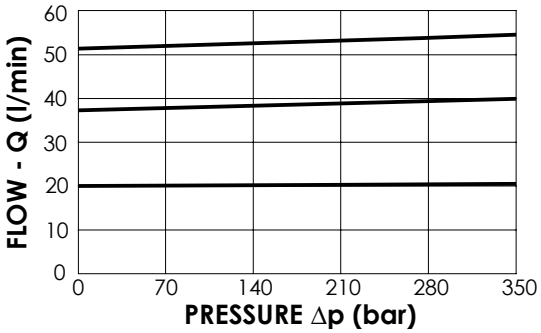

NOTES

Designed for DANFOSS motors OMP-OMR series.

ORDERING CODES

Quick code	Description	Main ports size	Max. Pressure (Bar)	Max. reg.flow (l/min)	Max. inlet flow (l/min)	Adjustment options
MF000373	MFCT-090-RVTN-55-G12-N210	G1/2"	210	55	90	Handknob and locknut

FLOW REGULATOR

MFCT-090-VPZR

3 WAYS COMPENSATED WITH CHECK VALVE

ATLANTIC Fluid Tech

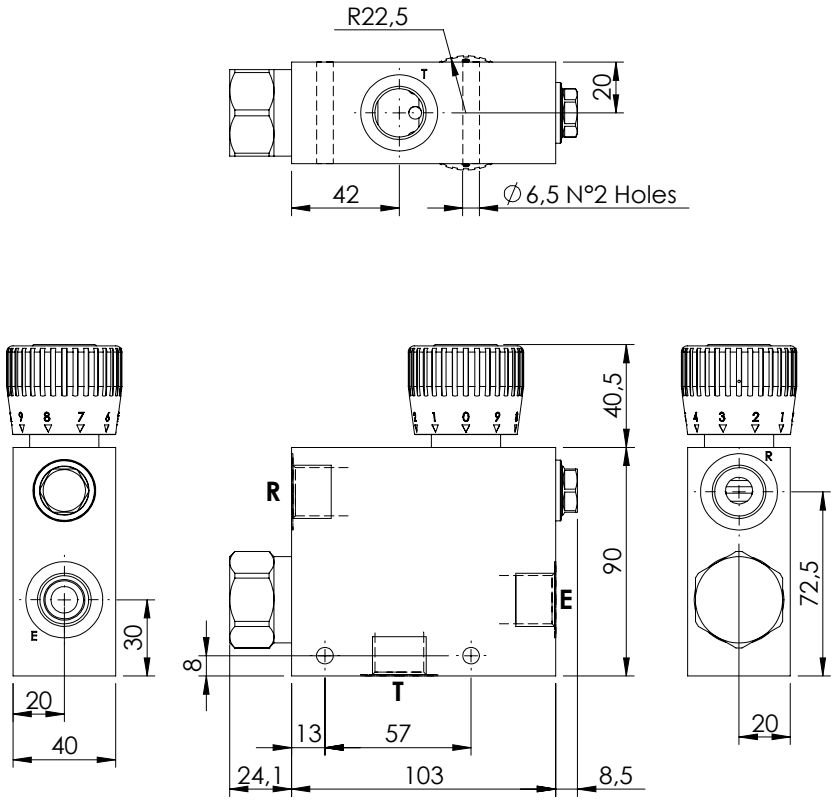

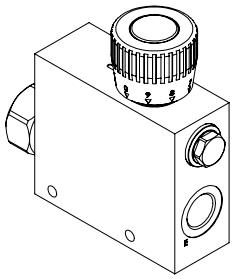

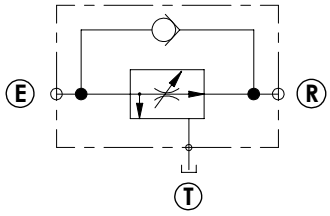

SPECIFICATIONS

Max. operating pressure:	210 bar
Rated flow:	90 l/min
Manifold:	Aluminium
Weight:	1,4 kg

ADJUSTMENT TYPE

Graduated handknob for flow regulation under pressure

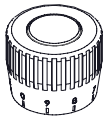

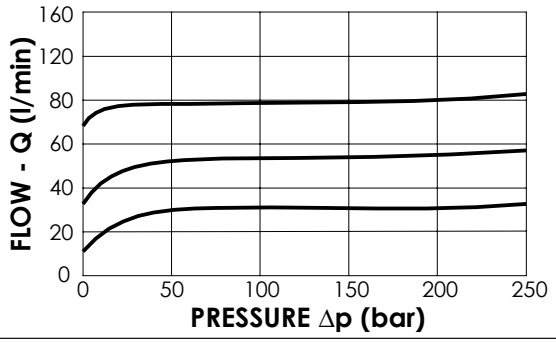

ORDERING CODES

Quick code	Description	Main ports size	Regulated flow range (l/min)	Adjustment type
MF000202	MFCT-090-VPZR-06-G12-N210	G 1/2"	0 - 6	Graduated handknob
MF000203	MFCT-090-VPZR-12-G12-N210	G 1/2"	0 - 12	Graduated handknob
MF000204	MFCT-090-VPZR-25-G12-N210	G 1/2"	0 - 25	Graduated handknob
MF000205	MFCT-090-VPZR-32-G12-N210	G 1/2"	0 - 32	Graduated handknob
MF000206	MFCT-090-VPZR-50-G12-N210	G 1/2"	0 - 50	Graduated handknob
MF000207	MFCT-090-VPZR-63-G12-N210	G 1/2"	0 - 63	Graduated handknob
MF000208	MFCT-090-VPZR-70-G12-N210	G 1/2"	0 - 70	Graduated handknob
MF000209	MFCT-090-VPZR-80-G12-N210	G 1/2"	0 - 80	Graduated handknob

FLOW REGULATOR

MFCT-090-LPZR

3 WAYS COMPENSATED WITH RELIEF VALVE

ATLANTIC Fluid Tech

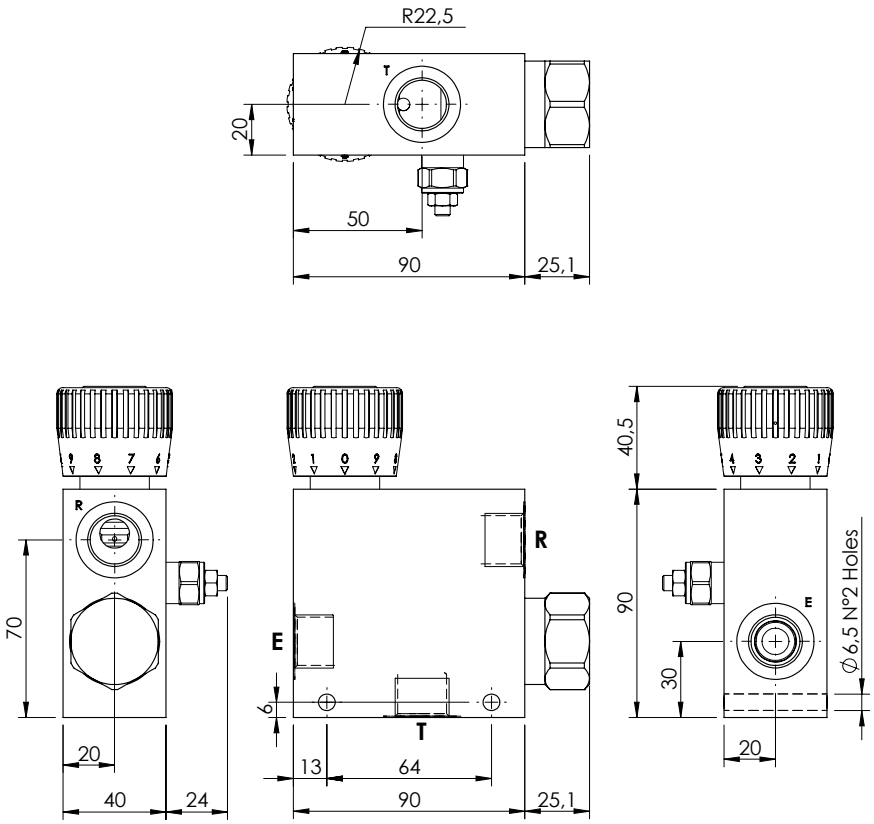

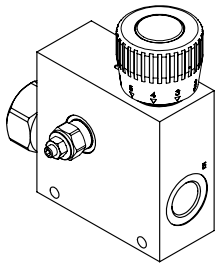

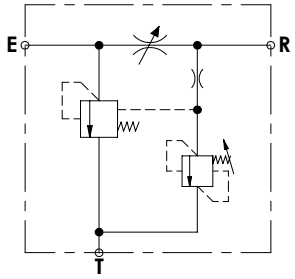

SPECIFICATIONS

Max. operating pressure:	210 bar
Rated flow:	90 l/min
Manifold:	Aluminium
Weight:	0,93 kg

ADJUSTMENT TYPE

Graduated handknob for flow regulation under pressure

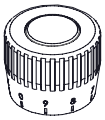

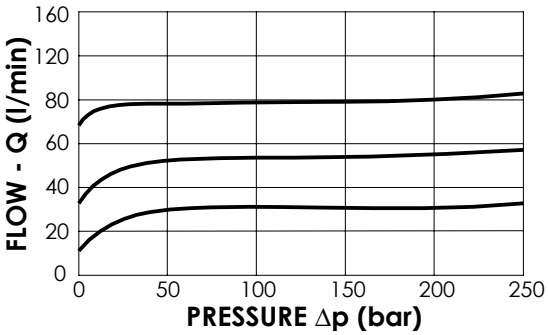

RELIEF VALVE

Setting range:	35 - 210 bar
Standard setting:	210 bar

ORDERING CODES

Quick code	Description	Main ports size	Regulated flow range (l/min)	Adjustment type
MF000218	MFCT-090-LPZR-06-G12-N210	G 1/2"	0 - 6	Graduated handknob
MF000219	MFCT-090-LPZR-12-G12-N210	G 1/2"	0 - 12	Graduated handknob
MF000220	MFCT-090-LPZR-25-G12-N210	G 1/2"	0 - 25	Graduated handknob
MF000221	MFCT-090-LPZR-32-G12-N210	G 1/2"	0 - 32	Graduated handknob
MF000222	MFCT-090-LPZR-50-G12-N210	G 1/2"	0 - 50	Graduated handknob
MF000223	MFCT-090-LPZR-63-G12-N210	G 1/2"	0 - 63	Graduated handknob
MF000224	MFCT-090-LPZR-70-G12-N210	G 1/2"	0 - 70	Graduated handknob
MF000225	MFCT-090-LPZR-80-G12-N210	G 1/2"	0 - 80	Graduated handknob

FLOW REGULATOR

MFCT-090-TPZR

3 WAYS COMPENSATED BY PASS CHECK VALVE RELIEF VALVE

ATLANTIC Fluid Tech

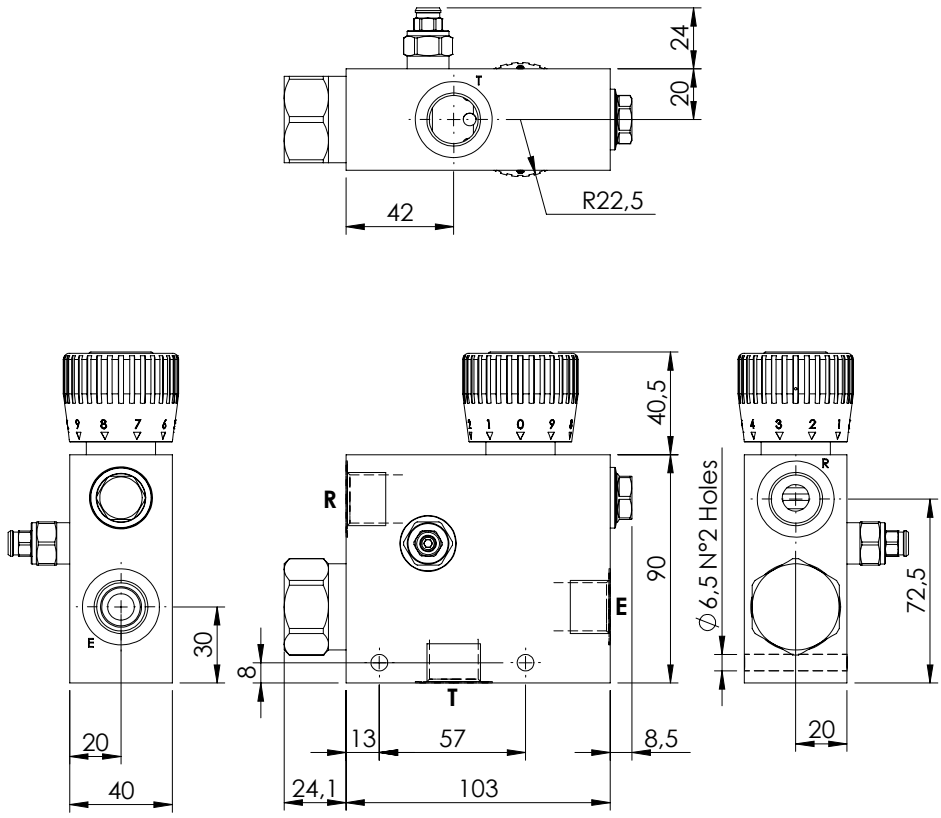

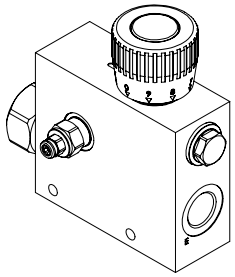

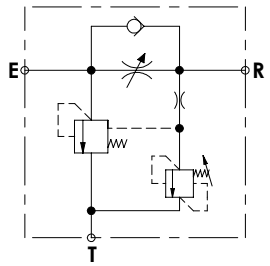

SPECIFICATIONS

Max. operating pressure:	210 bar
Rated flow:	90 l/min
Manifold:	Aluminium
Weight:	1,44 kg

ADJUSTMENT TYPE

Graduated handknob for flow regulation under pressure

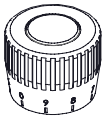

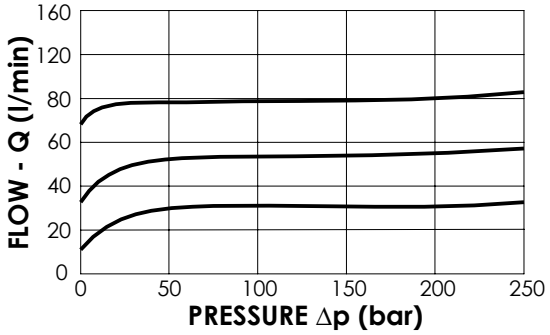

NOTES

Setting range: 35 - 210 bar

Standard setting: 210 bar

ORDERING CODES

Quick code	Description	Main ports size	Regulated flow range (l/min)	Adjustment type
MF000226	MFCT-090-TPZR-06-G12-N210	G 1/2"	0 - 6	Graduated handknob
MF000227	MFCT-090-TPZR-12-G12-N210	G 1/2"	0 - 12	Graduated handknob
MF000228	MFCT-090-TPZR-25-G12-N210	G 1/2"	0 - 25	Graduated handknob
MF000229	MFCT-090-TPZR-32-G12-N210	G 1/2"	0 - 32	Graduated handknob
MF000230	MFCT-090-TPZR-50-G12-N210	G 1/2"	0 - 50	Graduated handknob
MF000231	MFCT-090-TPZR-63-G12-N210	G 1/2"	0 - 63	Graduated handknob
MF000232	MFCT-090-TPZR-70-G12-N210	G 1/2"	0 - 70	Graduated handknob
MF000233	MFCT-090-TPZR-80-G12-N210	G 1/2"	0 - 80	Graduated handknob

FLOW REGULATOR

MFCT-090-MPTR

3 WAYS COMPENSATED WITH RELIEF VALVE AND ELECTRIC UNLOADING

ATLANTIC Fluid Tech

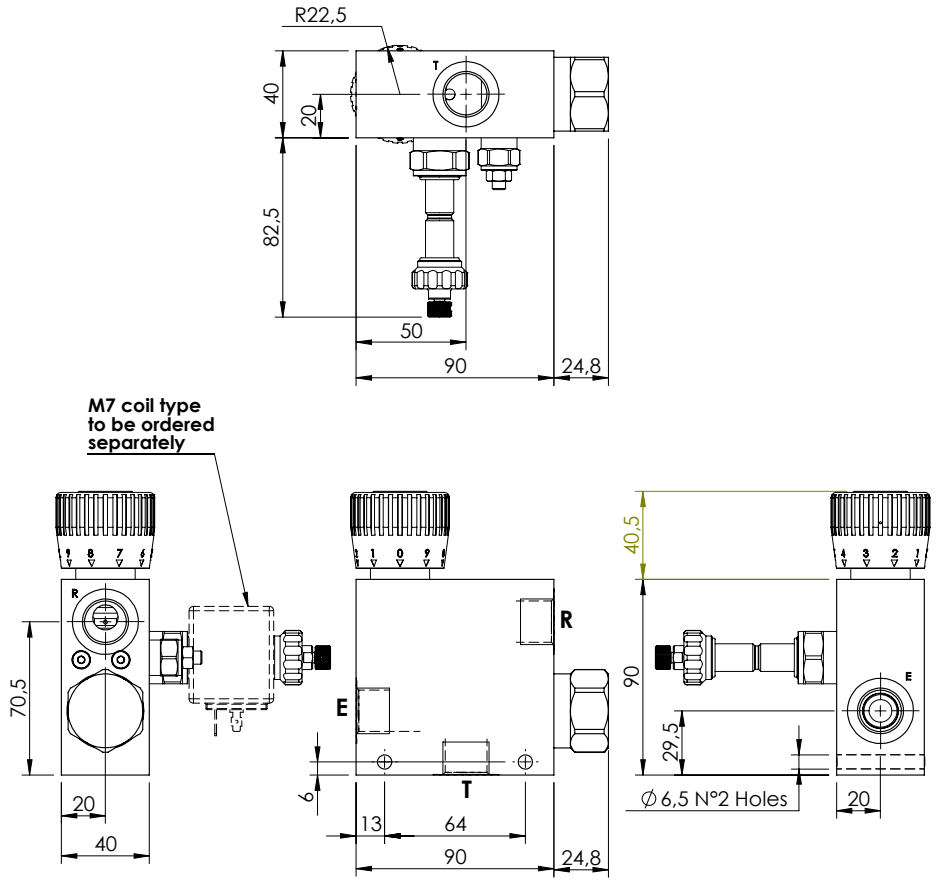

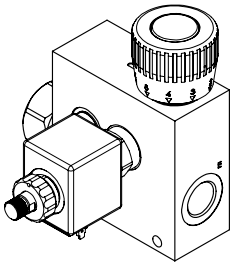

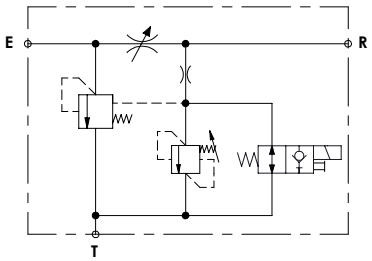

SPECIFICATIONS

Max. operating pressure:	210 bar
Rated flow:	90 l/min
Manifold:	Aluminium
Weight:	0,93 kg

ADJUSTMENT TYPE

Graduated handknob for flow regulation under pressure

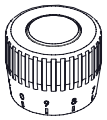

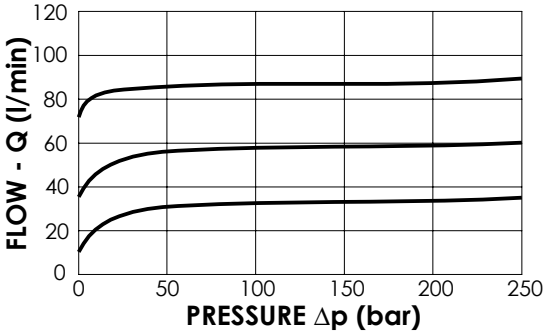

RELIEF VALVE

Setting range: 35 - 210 bar

Standard setting: 210 bar

ORDERING CODES

Quick code	Description	Main ports size	Regulated flow range (l/min)	Adjustment type
MF000298	MFCT-090-MPTR-06-G12-N210	G 1/2"	0 - 6	Graduated handknob
MF000299	MFCT-090-MPTR-12-G12-N210	G 1/2"	0 - 12	Graduated handknob
MF000300	MFCT-090-MPTR-25-G12-N210	G 1/2"	0 - 25	Graduated handknob
MF000301	MFCT-090-MPTR-32-G12-N210	G 1/2"	0 - 32	Graduated handknob
MF000302	MFCT-090-MPTR-50-G12-N210	G 1/2"	0 - 50	Graduated handknob
MF000303	MFCT-090-MPTR-63-G12-N210	G 1/2"	0 - 63	Graduated handknob
MF000304	MFCT-090-MPTR-70-G12-N210	G 1/2"	0 - 70	Graduated handknob
MF000305	MFCT-090-MPTR-80-G12-N210	G 1/2"	0 - 80	Graduated handknob

FLOW REGULATOR

MFCT-280-MVTR

3 WAYS COMPENSATED WITH RELIEF VALVE AND ELECTRIC UNLOADING

ATLANTIC Fluid Tech

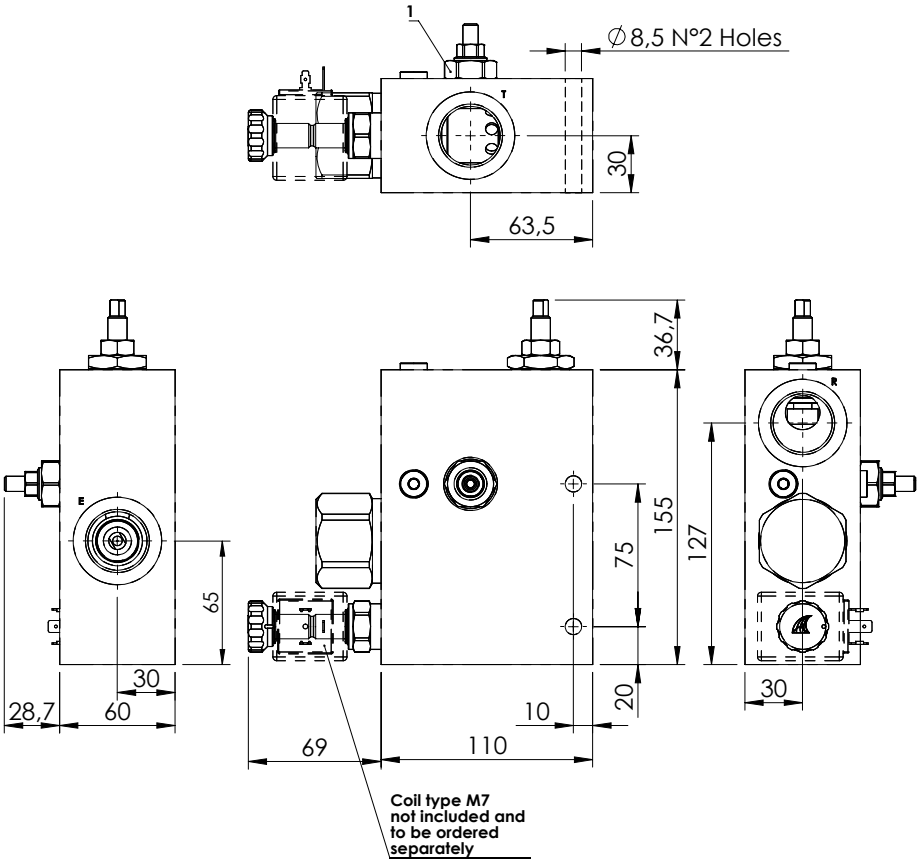

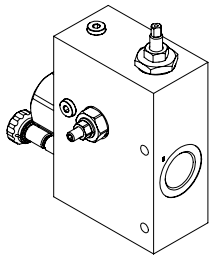

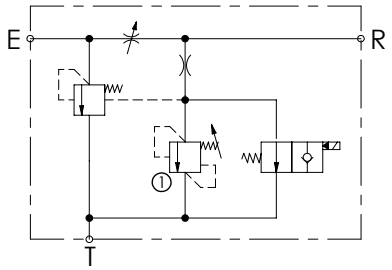

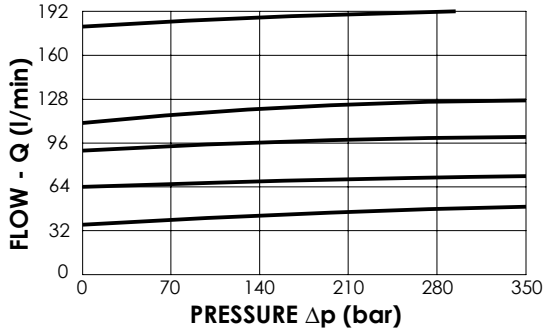

SPECIFICATIONS

Max. operating pressure:	250 bar
Rated flow:	280 l/min
Regulated flow:	190 l/min
Manifold:	Aluminium
Weight:	3,24 kg
Coil:	M7

ADJUSTMENT OPTIONS

Handknob and locknut

Screw and locknut

Graduated handknob

NOTES

-For options see pag. 22.00.000.

ORDERING CODES

Quick code	Description	Main ports size	Standard setting (bar, Q=l/min)	Adjustment range (bar)	Pressure increase (bar)
MF000143	**MFCT-280-MVTR-19-G10-N250**	R,E,T: **G 1"**	**240**	**140-350**	**142**

FLOW REGULATOR

BPNN-025-LLEU

SOLENOID OPERATED VALVES
STANDARD INTEGRATED CIRCUITS

ATLANTIC Fluid Tech

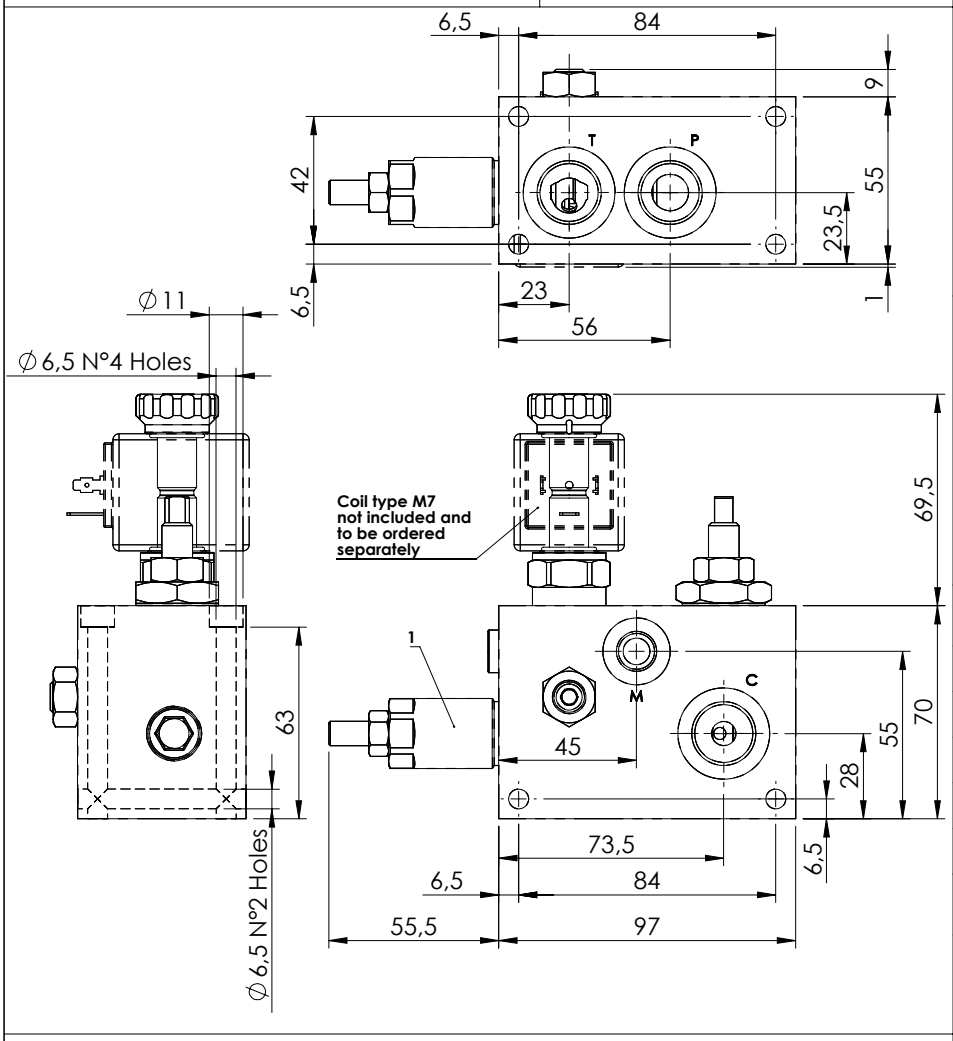

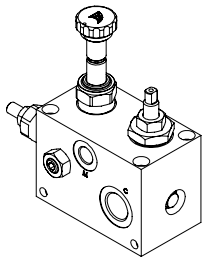

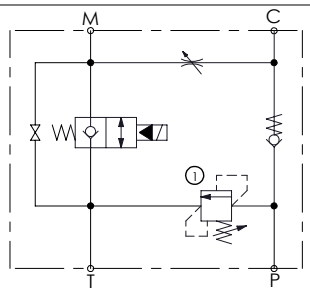

SPECIFICATIONS

Max. operating pressure:	350 bar
Rated flow:	25 l/min
Manifold:	Aluminium
Weight:	1,3 kg
Coil:	M7

ADJUSTMENT OPTIONS

Handknob and locknut

Screw and locknut

Graduated handknob

NOTES

-For options see pag. 22.00.000.

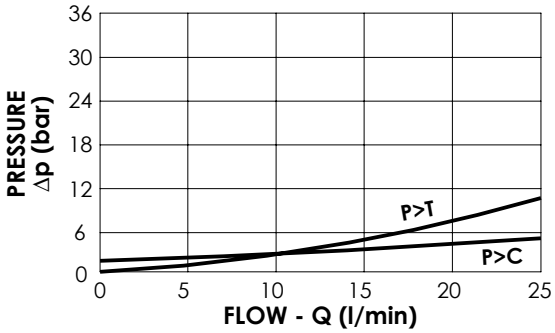

ORDERING CODES

Quick code	Description	Main ports size	Standard setting (bar, Q=5 l/min)	Adjust. range (bar)	Pressure increase (bar)	Adjust. options
BP000081	**BPNN-025-LLEU-G12-N200**	P,T,C:**G1/2"** M:**G1/4"**	**200**	**50-210**	**42**	**Screw and locknut**

FLOW REGULATOR

MFCT-150-LHTR

3 WAYS COMPENSATED WITH RELIEF VALVE

ATLANTIC Fluid Tech

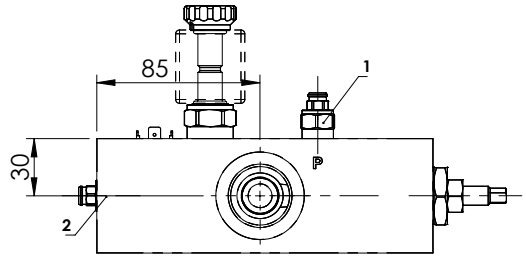

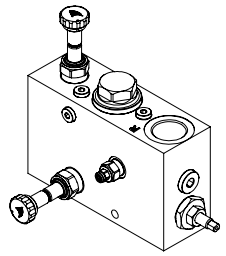

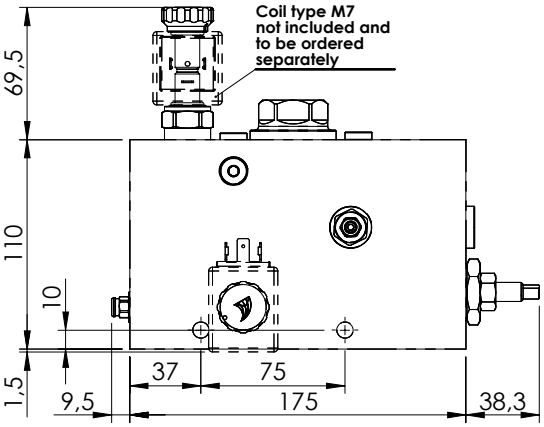

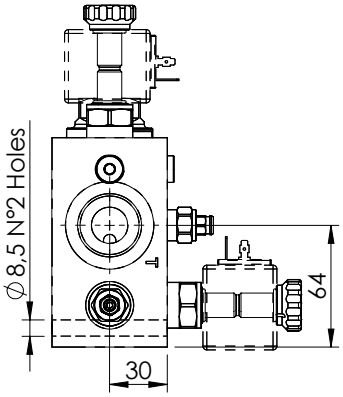

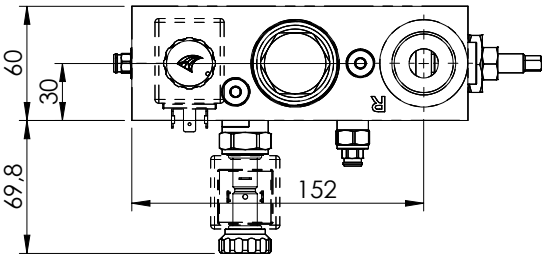

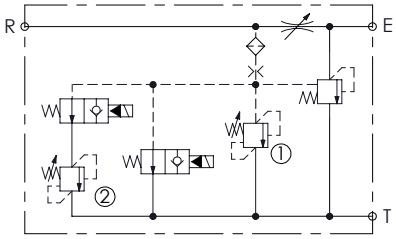

SPECIFICATIONS

Max. operating pressure:	210 bar
Rated flow:	150 l/min
Regulated Flow:	90 l/min
Manifold:	Aluminium
Weight:	3,48 kg
Coil:	M7

ADJUSTMENT OPTIONS

Handknob and locknut

Screw and locknut

Graduated handknob

NOTES

-For options see pag. 22.00.000.

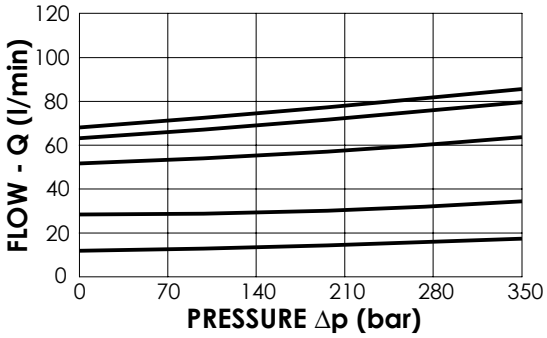

ORDERING CODES

Quick code	Description	Main ports size	Standard setting (bar, Q=5 l/min)	Adjustment range (bar)	Pressure indrease (bar/turn)
MF000344	**MFCT-150-LHTR-90-G10-N210**	R,E,T: **G 1"**	① **170** ② **150**	① **100-200** ② **100-200**	① **75** ② **75**

FLOW REGULATOR

MFPT-100-RHAR

PRESSURE COMPENSATED PRIORITY FLOW REGULATOR

ATLANTIC Fluid Tech

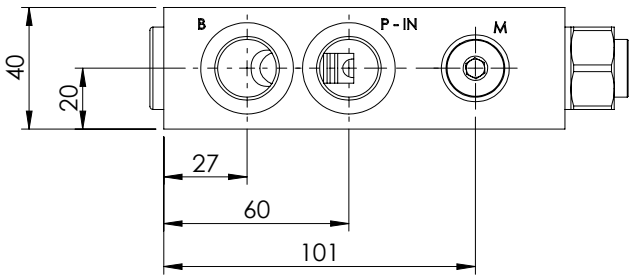

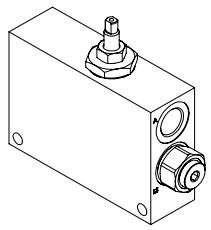

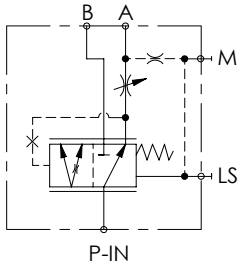

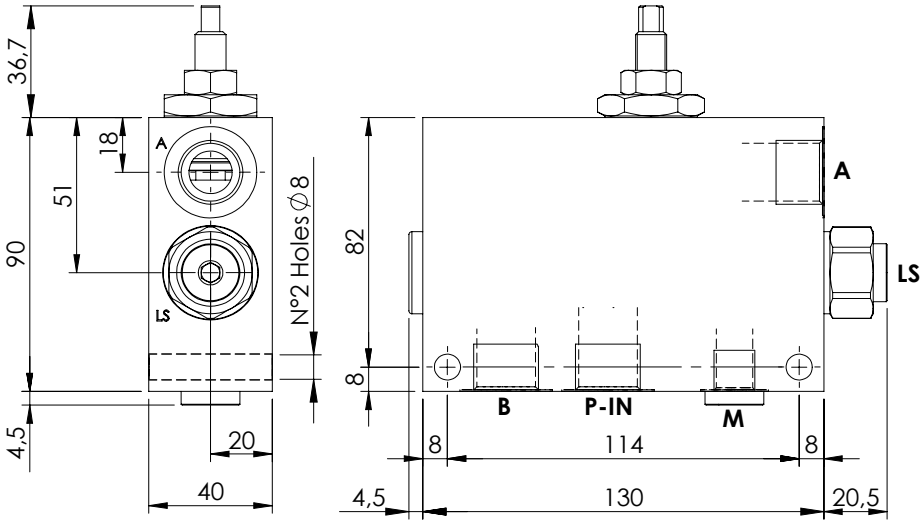

SPECIFICATIONS

Max. operating pressure:	350 bar
Rated flow:	100 l/min
Manifold:	Steel
Weight:	3,38 kg

ADJUSTMENT OPTIONS

Handknob and locknut

Screw and locknut

Graduated handknob

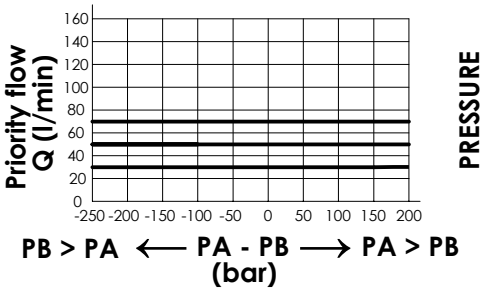

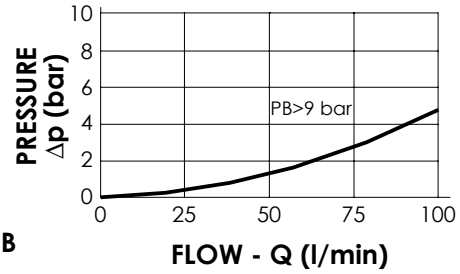

NOTES

- For correct operation 8-9 bar must be present in port A. For open centre or low pressure systems a 9 bar check valve should be fitted in port A, see page 61.
- Spool switching can be influenced by flexing or stressing the valve body. It is recommended to fit spacers on the mounting bolts between the valve and the mounting surface.
- For options see pag. 22.00.000.

ORDERING CODES

Quick code	Description	Main ports size	Max. inlet flow (l/min)	Max. regulated flow (l/min)	Adjustment options
MF000069	MFPT-100-RHAR-85-G12-N350	P-IN, A, B: G1/2" LS, M: G1/4"	100	85	Screw and locknut

FLOW REGULATOR

MFPT-200-RHAR

PRESSURE COMPENSATED PRIORITY

ATLANTIC Fluid Tech

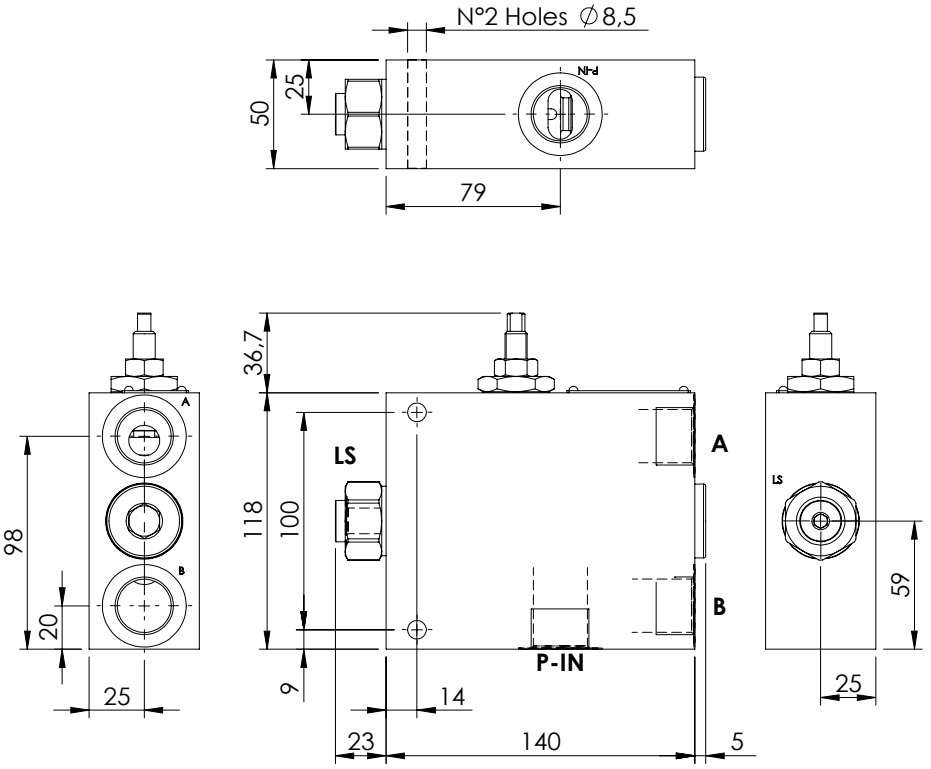

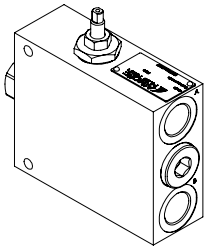

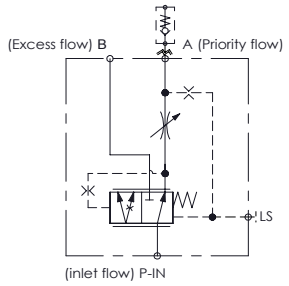

SPECIFICATIONS

Max. operating pressure:	350 bar
Rated flow:	200 l/min
Regulated Flow:	1-140 l/min
Manifold:	Zinc plated steel
Weight:	4,9 kg

ADJUSTMENT OPTIONS

Screw and locknut

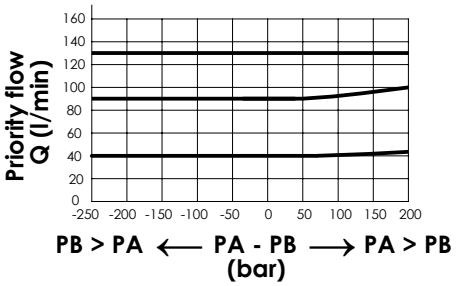

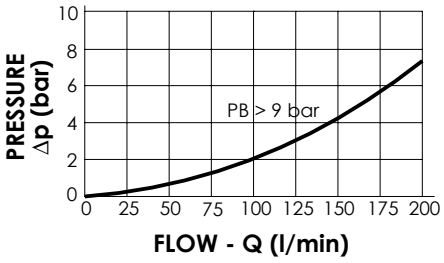

NOTES

-For options see pag. 22.00.000.

ORDERING CODES

Quick code	Description	Main ports size	Adjustment options	
MF000141	**MFPT-200-RHAR-14-G34-N350**	P-IN,A,B: **G 3/4"** LS: **G 1/4"**	**Screw and locknut**	

FLOW REGULATOR

MFPT-300-RHAR

PRESSURE COMPENSATED PRIORITY

ATLANTIC Fluid Tech

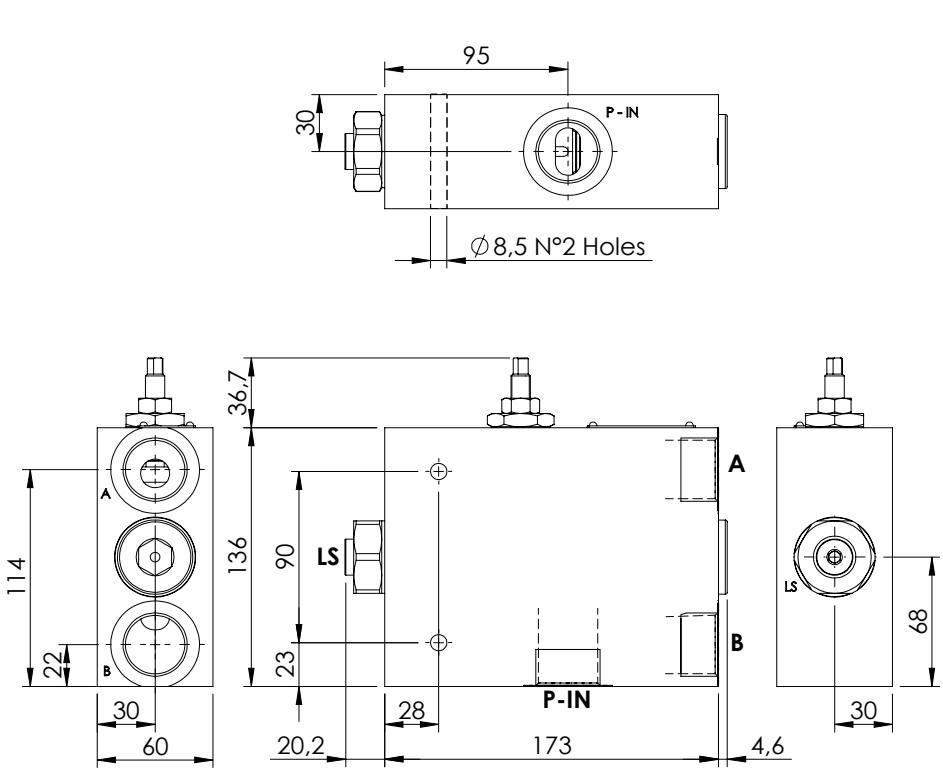

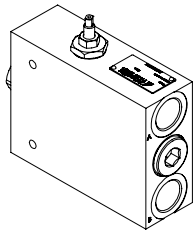

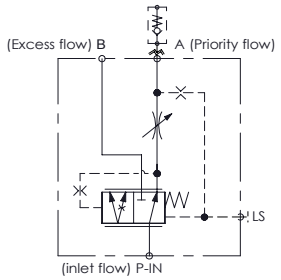

SPECIFICATIONS

Max. operating pressure:	350 bar
Rated flow:	300 l/min
Regulated Flow:	1-220 l/min
Manifold:	Zinc plated steel
Weight:	4,9 kg

ADJUSTMENT OPTIONS

Screw and locknut

NOTES

-For options see pag. 22.00.000.

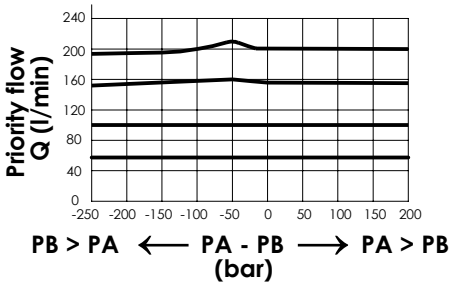

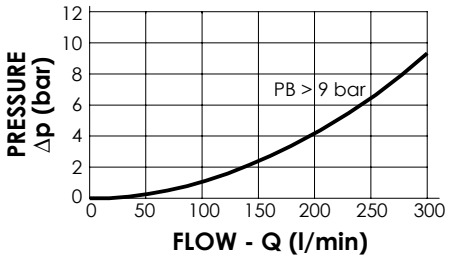

ORDERING CODES

Quick code	Description	Main ports size	Adjustment options	
MF000283	**MFPT-300-RHAR-20-G10-N350**	P-IN,A,B: **G 1"** LS: **G 1/4"**	**Screw and locknut**	

FLOW REGULATOR

MFPT-100-MHAR

PRESSURE COMPENSATED PRIORITY FLOW REGULATOR FOR AUXILIARY CIRCUITS

ATLANTIC Fluid Tech

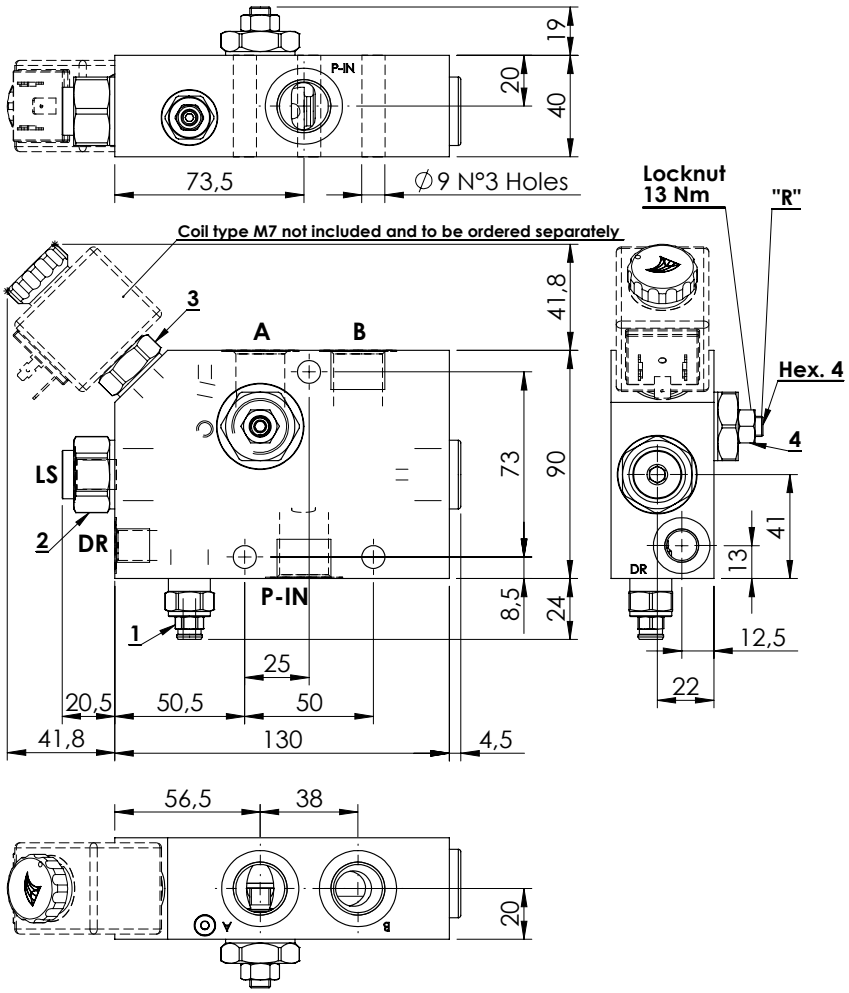

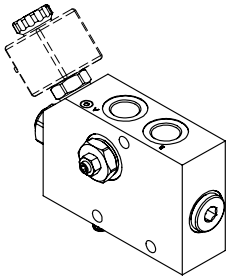

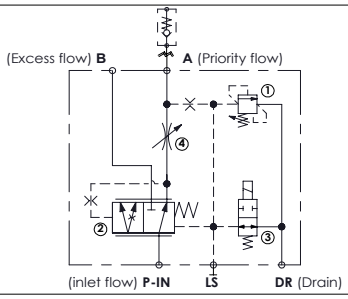

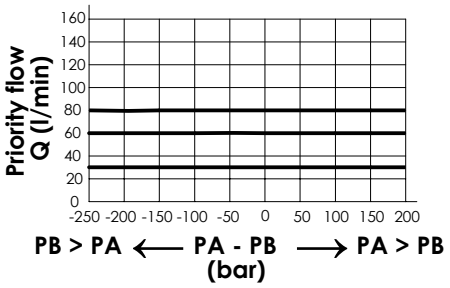

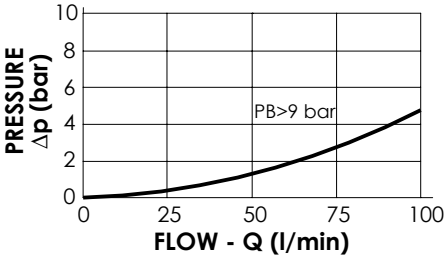

SPECIFICATIONS

Max. operating pressure:	**350 bar**
Rated flow:	**100 l/min**
Regulated Flow:	**1,5 - 85 l/min**
Manifold:	**Zinc plated steel**
Weight:	**3,4 kg**
Coil:	**M7**

NOTES

- Turn screw "R" anti-clockwise to increase regulated flow.
- Drain flow when de-energized 2 l/min.
- Max back pressure admitted on "DR" line 1,5 bar.
- For correct operation 8-9 bar must be present in port A. For open centre or low pressure systems a 9 bar check valve should be fitted in port A .
- Spool switching can be influenced by flexing or stressing the valve body. It is recommended to fit spacers on the mounting bolts between the valve and the mounting surface.
- See chapter four for suitable check valves.

ORDERING CODES

Quick code	Description	Main ports size	Setting range (bar)	Standard setting (bar)	Adjustment (bar/turn)
MF000053	**MFPT-100-MHAR-85-G12-N210**	P-IN, A,B: **G 1/2"** DR,LS: **G 1/4"**	**100 - 200**	**200**	**75**
MF000054	**MFPT-100-MHAR-85-G12-N350**	P-IN, A,B: **G 1/2"** DR,LS: **G 1/4"**	**150 - 350**	**350**	**165**

FLOW REGULATOR

MFPT-200-MHAR

PRESSURE COMPENSATED PRIORITY FLOW REGULATOR FOR AUXILIARY CIRCUITS

ATLANTIC Fluid Tech

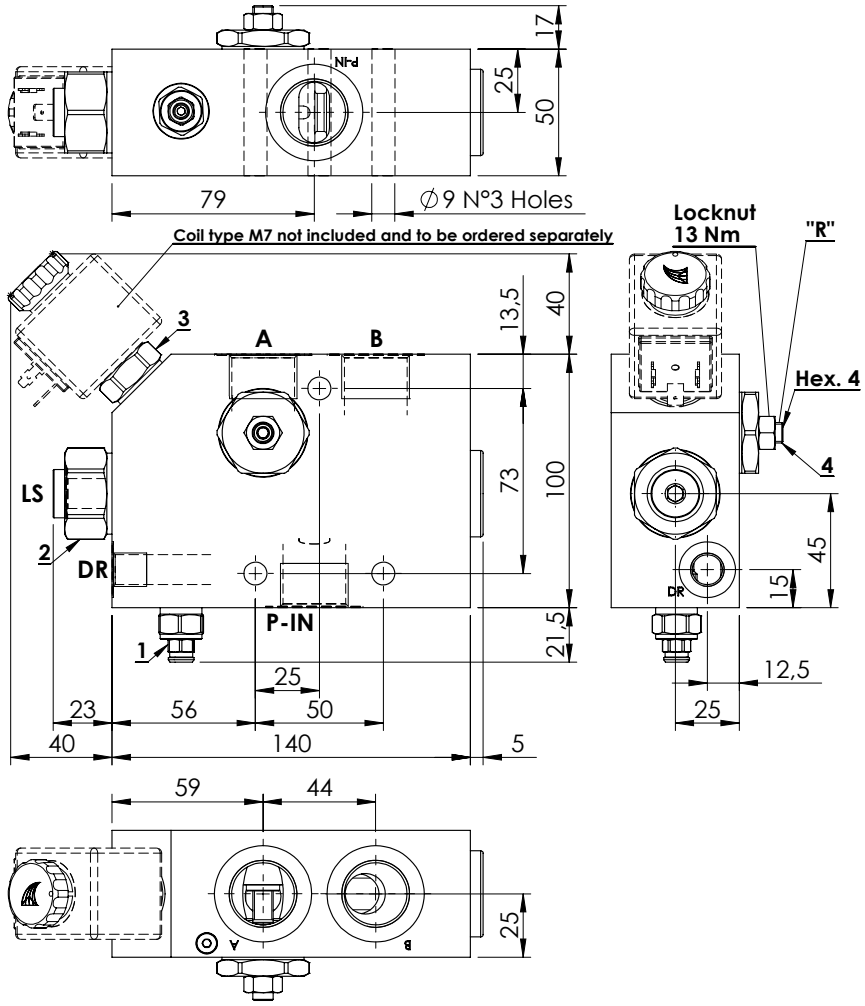

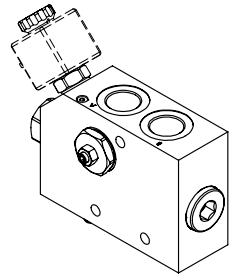

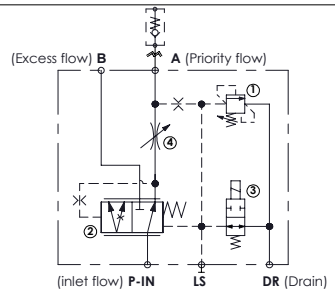

SPECIFICATIONS

Max. operating pressure:	350 bar
Rated flow:	200 l/min
Regulated Flow:	1,5 - 140 l/min
Manifold:	Zinc plated steel
Weight:	4,9 kg
Coil:	M7

NOTES

- Turn screw "R" anti-clockwise to increase regulated flow.
- Drain flow when de-energized 2 l/min.
- Max back pressure admitted on "DR" line 1,5 bar.
- For correct operation 8-9 bar must be present in port A. For open centre or low pressure systems a 9 bar check valve should be fitted in port A .
- Spool switching can be influenced by flexing or stressing the valve body. It is recommended to fit spacers on the mounting bolts between the valve and the mounting surface.
- See chapter four for suitable chack valves.

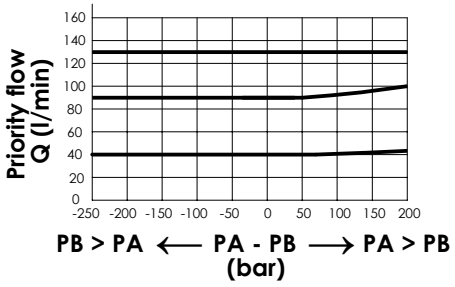

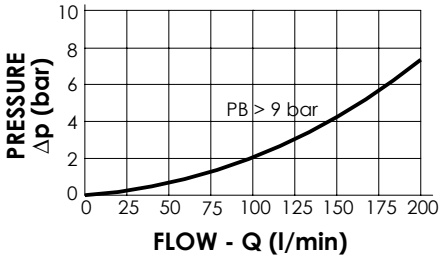

ORDERING CODES

Quick code	Description	Main ports size	Setting range (bar)	Standard setting (bar)	Adjustment (bar/turn)
MF000055	MFPT-200-MHAR-14-G34-N210	P-IN, A,B: **G 3/4"** DR,LS: **G 1/4"**	100 - 200	200	75
MF000056	MFPT-200-MHAR-14-G34-N350	P-IN, A,B: **G 3/4"** DR,LS: **G 1/4"**	150 - 350	350	165

FLOW REGULATOR

MFPT-300-MHAR

PRESSURE COMPENSATED PRIORITY FLOW REGULATOR FOR AUXILIARY CIRCUITS

ATLANTIC Fluid Tech

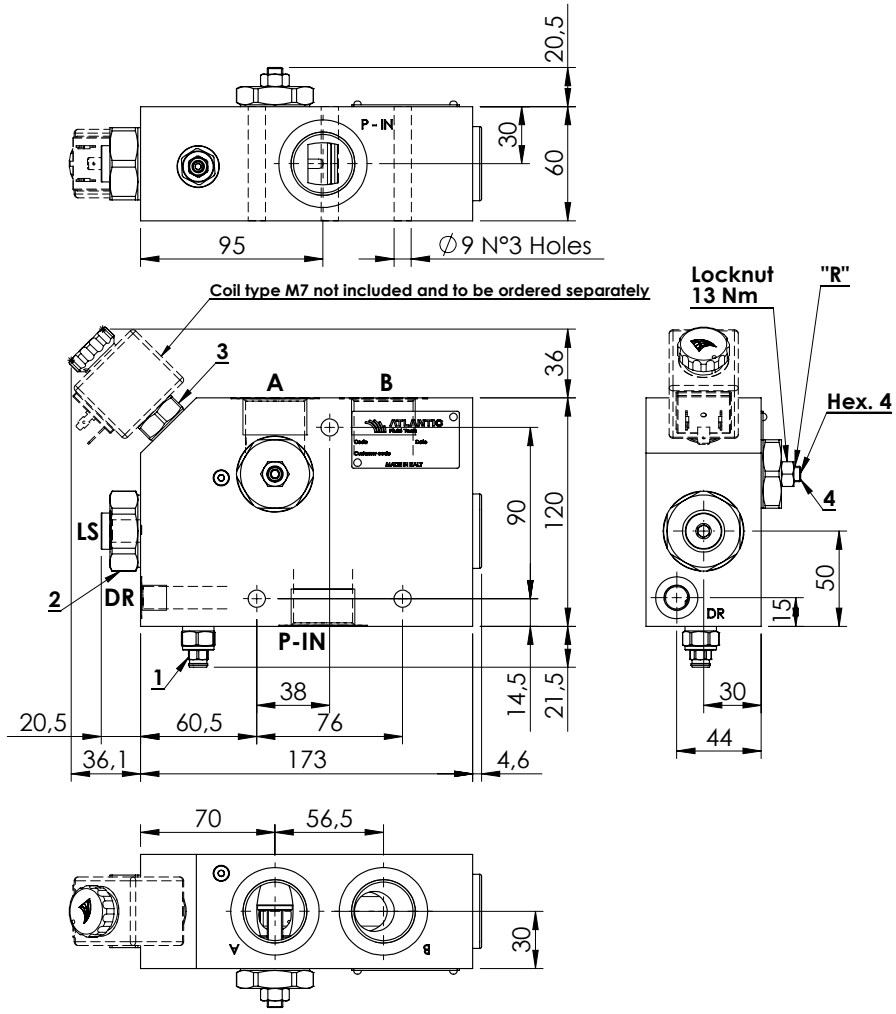

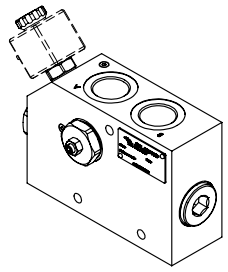

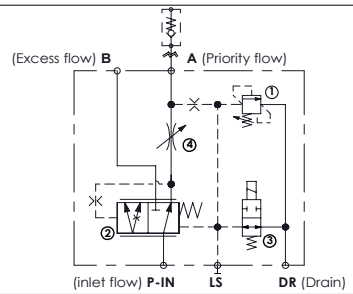

SPECIFICATIONS

Max. operating pressure:	350 bar
Rated flow:	300 l/min
Regulated Flow:	1,5 - 220 l/min
Manifold:	Zinc plated steel
Weight:	8,6 kg
Coil:	M7

NOTES

- Turn screw "R" anti-clockwise to increase regulated flow.
- Drain flow when de-energized 2 l/min.
- Max back pressure admitted on "DR" line 1,5 bar.
- For correct operation 8-9 bar must be present in port A. For open centre or low pressure systems a 9 bar check valve should be fitted in port A .
- Spool switching can be influenced by flexing or stressing the valve body. It is recommended to fit spacers on the mounting bolts between the valve and the mounting surface.
- See chapter four for suitable check valves.

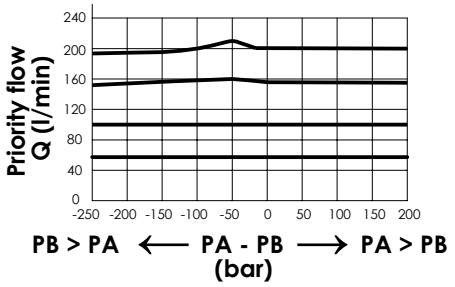

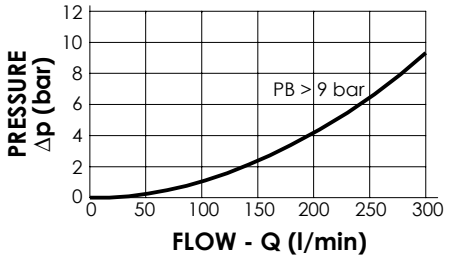

ORDERING CODES

Quick code	Description	Main ports size	Setting range (bar)	Standard setting (bar)	Adjustment (bar/turn)
MF000057	MFPT-300-MHAR-22-G10-N210	P-IN, A,B: **G 1"** DR,LS: **G 1/4"**	100 - 200	200	75
MF000058	MFPT-300-MHAR-22-G10-N350	P-IN, A,B: **G 1"** DR,LS: **G 1/4"**	150 - 350	350	165

FLOW REGULATOR

MFPT-400-MHAR

PRESSURE COMPENSATED PRIORITY FLOW REGULATOR FOR AUXILIARY CIRCUITS

ATLANTIC Fluid Tech

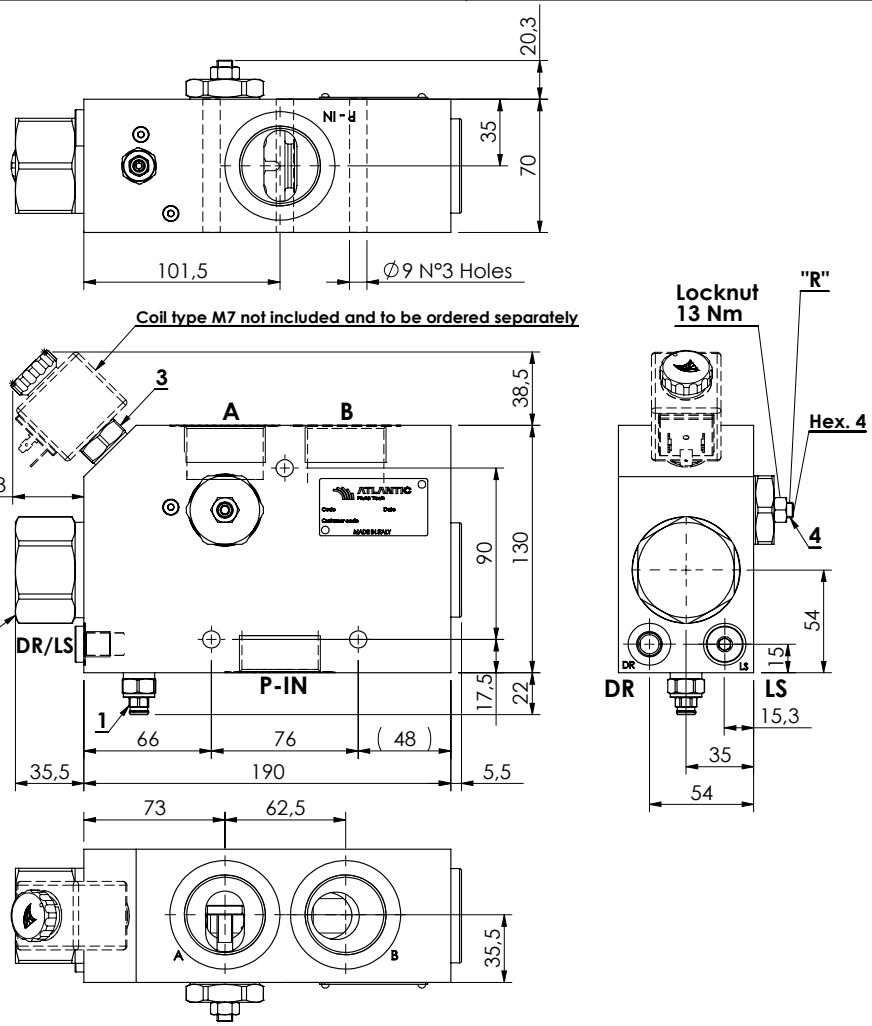

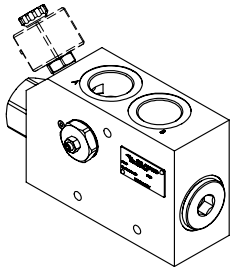

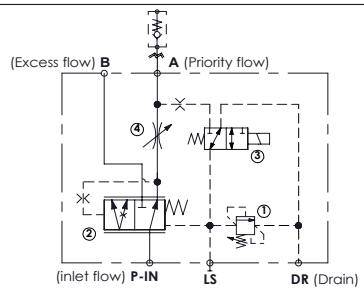

SPECIFICATIONS

Max. operating pressure:	350 bar
Rated flow:	400 l/min
Regulated Flow:	1,5 - 300 l/min
Manifold:	Zinc plated steel
Weight:	11,4 kg
Coil:	M7

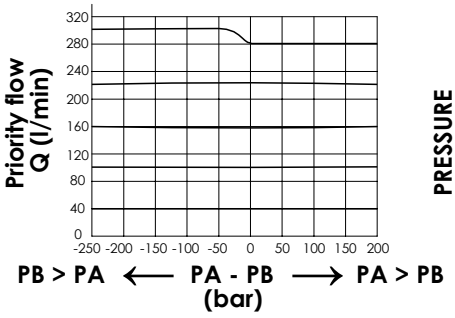

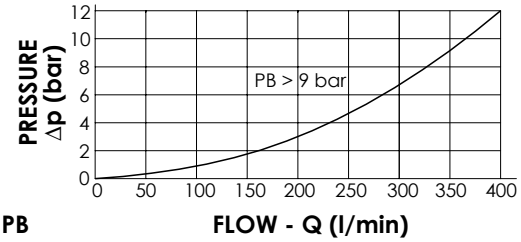

NOTES

- Turn screw "R" anti-clockwise to increase regulated flow.
- Drain flow when de-energized 2,5 l/min.
- Max back pressure admitted on "DR" line 1,5 bar.
- For correct operation 8-9 bar must be present in port A. For open centre or low pressure systems a 9 bar check valve should be fitted in port A .
- Spool switching can be influenced by flexing or stressing the valve body. It is recommended to fit spacers on the mounting bolts between the valve and the mounting surface.
- See chapter four for suitable check valves.

ORDERING CODES

Quick code	Description	Main ports size	Setting range (bar)	Standard setting (bar)	Adjustment (bar/turn)
MF000071	MFPT-400-MHAR-30-G11-N210	P-IN, A,B: **G 1"-1/4** DR,LS: **G 1/4"**	100 - 200	200	75
MF000073	MFPT-400-MHAR-30-G11-N350	P-IN, A,B: **G 1"-1/4** DR,LS: **G 1/4"**	150 - 350	350	165

FLOW REGULATOR

MFTT-100-MHAR

PRESSURE COMPENSATED PRIORITY TWO PUMPS SYSTEM FLOW REGULATOR FOR AUXILIARY CIRCUITS

ATLANTIC Fluid Tech

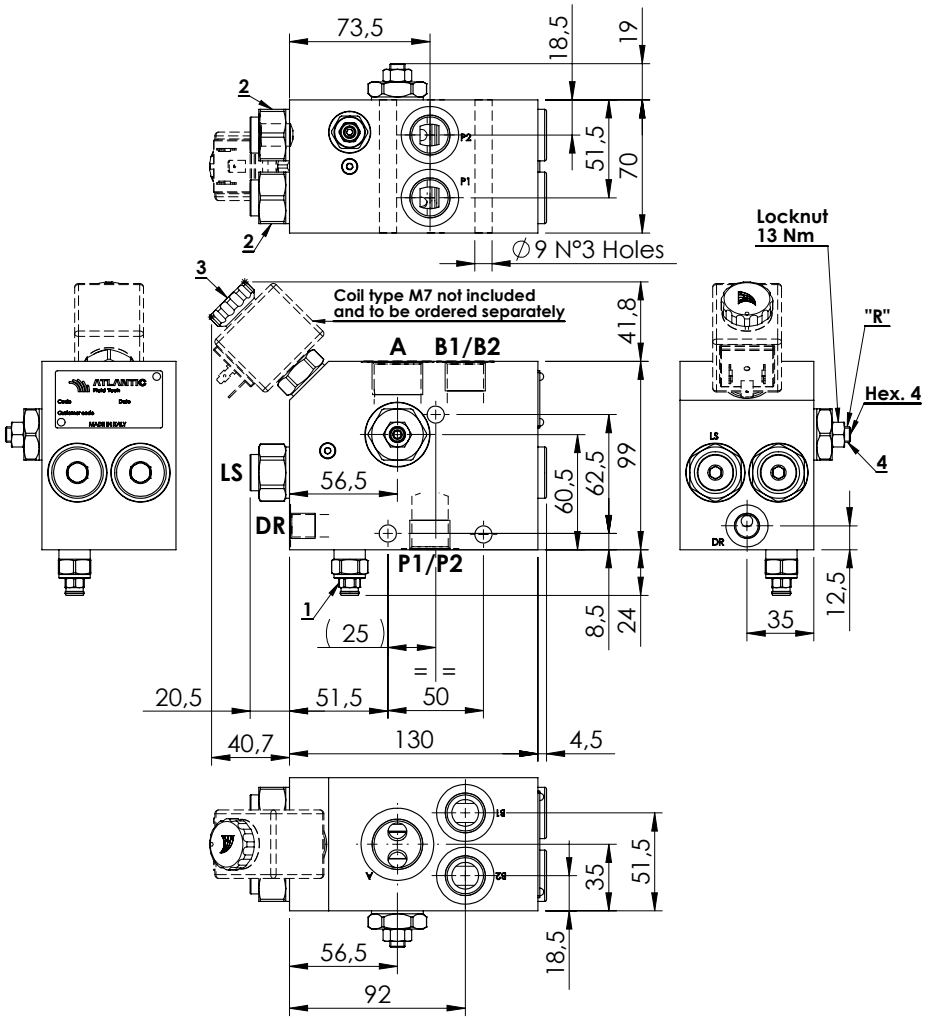

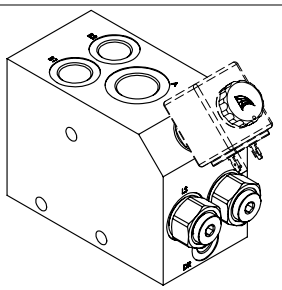

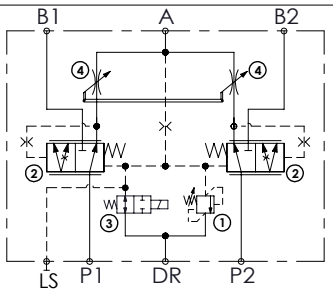

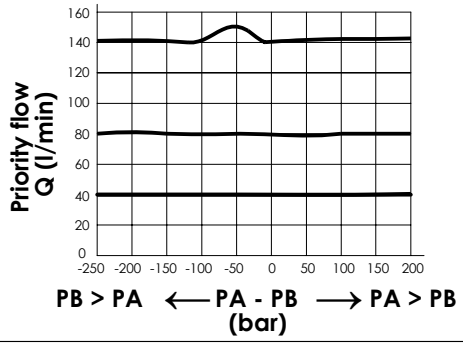

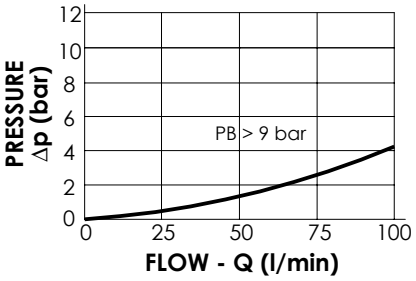

SPECIFICATIONS

Max. operating pressure:	**350 bar**
Rated flow:	**2 x 100 l/min**
Regulated Flow:	**3 - 150 l/min**
Manifold:	**Zinc plated steel**
Weight:	**6,5 kg**
Coil:	**M7**

NOTES

- Turn screw "R" anti-clockwise to increase regulated flow.
- Drain flow when de-energized 2 l/min.
- Max back pressure admitted on "DR" line 1,5 bar.
- For correct operation 8-9 bar must be present in port A. For open centre or low pressure systems a 9 bar check valve should be fitted in port A .
- Spool switching can be influenced by flexing or stressing the valve body. It is recommended to fit spacers on the mounting bolts between the valve and the mounting surface.
- See chapter four for suitable check valves.

ORDERING CODES

Quick code	Description	Main ports size	Setting range (bar)	Standard setting (bar)	Adjustment (bar/turn)
MF000066	**MFTT-100-MHAR-85-G12-N210**	P1-P2-B1-B2: **G 1/2"** A: **G3/4"**; DR: **G 1/4"**	**100 - 200**	**200**	**75**
MF000067	**MFTT-100-MHAR-85-G12-N350**	P1-P2-B1-B2: **G 1/2"** A: **G3/4"**; DR: **G 1/4"**	**150 - 350**	**350**	**165**

FLOW REGULATOR

MFTT-200-MHAR

PRESSURE COMPENSATED PRIORITY TWO PUMPS SYSTEM FLOW REGULATOR FOR AUXILIARY CIRCUITS

ATLANTIC Fluid Tech

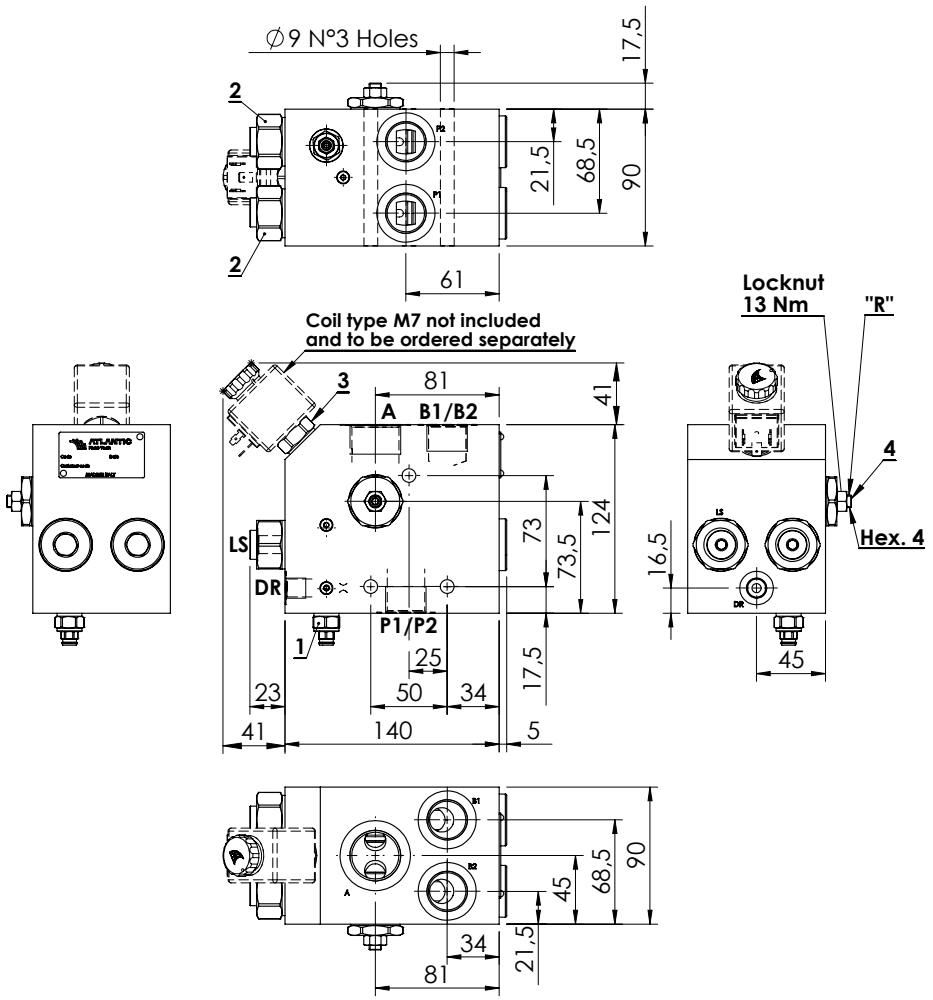

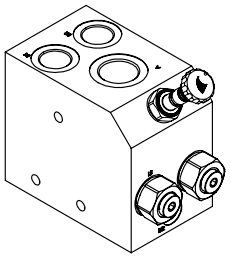

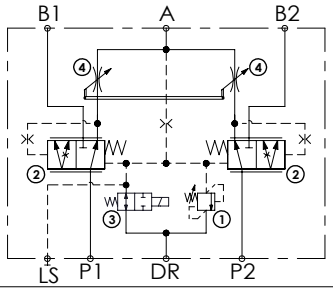

SPECIFICATIONS

Max. operating pressure:	350 bar
Rated flow:	2 x 200 l/min
Regulated Flow:	3 - 250 l/min
Manifold:	Zinc plated steel
Weight:	10,9 kg
Coil:	M7

NOTES

- Turn screw "R" anti-clockwise to increase regulated flow.
- Drain flow when de-energized 2 l/min.
- Max back pressure admitted on "DR" line 1,5 bar.
- For correct operation 8-9 bar must be present in port A. For open centre or low pressure systems a 9 bar check valve should be fitted in port A .
- Spool switching can be influenced by flexing or stressing the valve body. It is recommended to fit spacers on the mounting bolts between the valve and the mounting surface.
- See chapter four for suitable check valves.

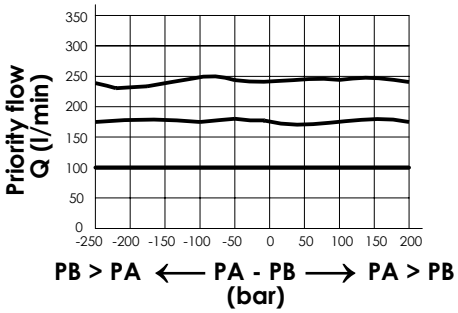

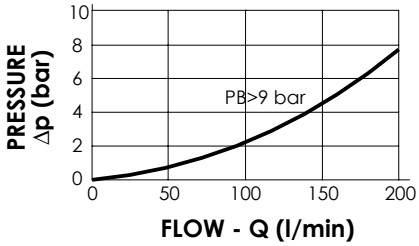

ORDERING CODES

Quick code	Description	Main ports size	Setting range (bar)	Standard setting (bar)	Adjustment (bar/turn)
MF000064	MFTT-200-MHAR-14-G34-N210	P1-P2-B1-B2: **G3/4"** A: **G1"** ; T: **G1/4"**	100-200	200	75
MF000065	MFTT-200-MHAR-14-G34-N350	P1-P2-B1-B2: **G3/4"** A: **G1"** ; T: **G1/4"**	150-350	350	165

FLOW REGULATOR

MFTT-300-MHAR

PRESSURE COMPENSATED PRIORITY TWO PUMPS SYSTEM FLOW REGULATOR FOR AUXILIARY CIRCUITS

ATLANTIC Fluid Tech

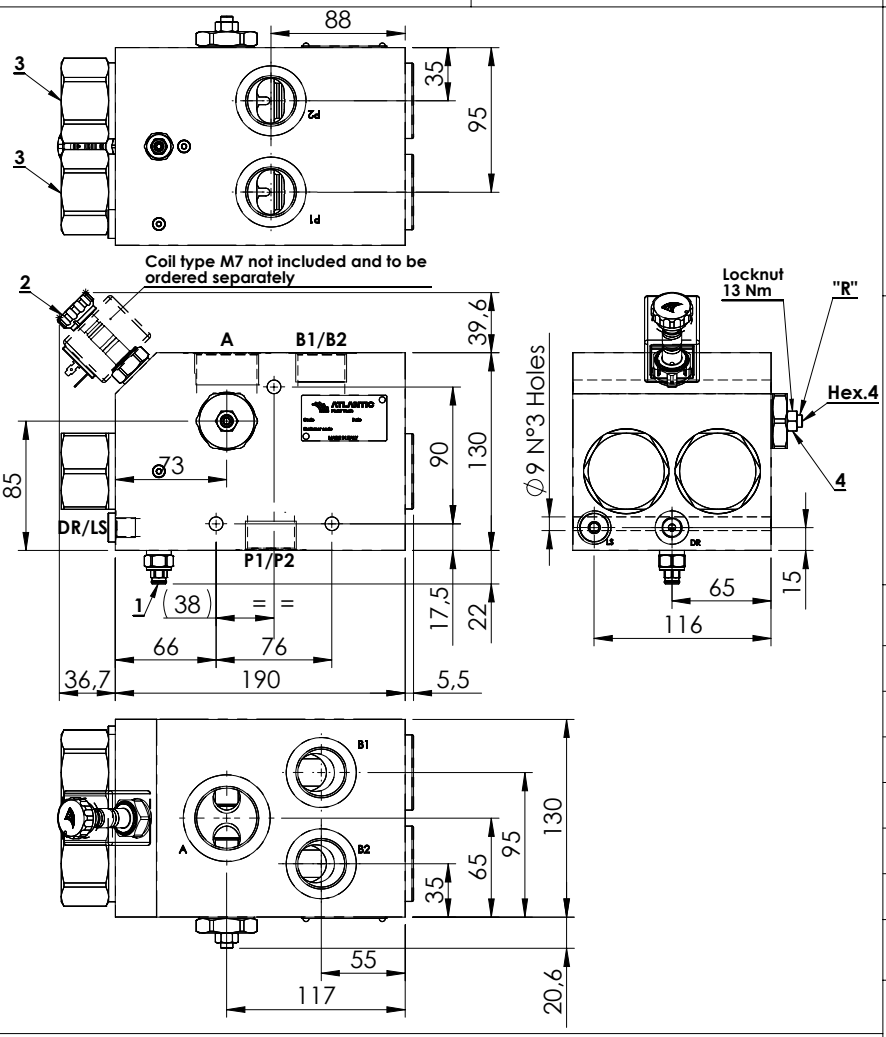

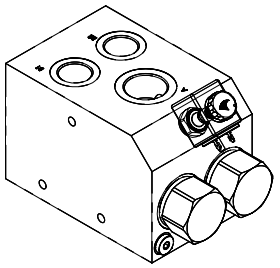

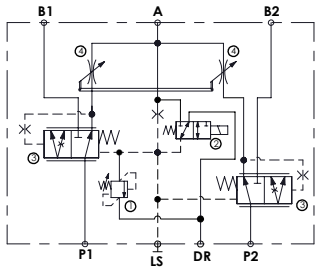

SPECIFICATIONS

Max. operating pressure:	350 bar
Rated flow:	2 x 300 l/min
Regulated Flow:	1,5 - 300 l/min
Manifold:	Zinc plated steel
Weight:	22,36 kg
Coil:	M7

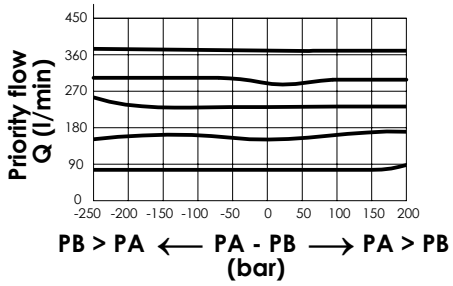

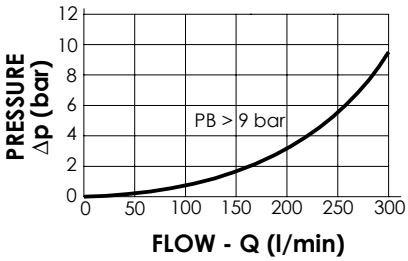

NOTES

- Turn screw "R" anti-clockwise to increase regulated flow.
- Drain flow when de-energized 2 l/min.
- Max back pressure admitted on "DR" line 1,5 bar.
- For correct operation 8-9 bar must be present in port A. For open centre or low pressure systems a 9 bar check valve should be fitted in port A .
- Spool switching can be influenced by flexing or stressing the valve body. It is recommended to fit spacers on the mounting bolts between the valve and the mounting surface.

-See chapter four for suitable check valves.

ORDERING CODES

Quick code	Description	Main ports size	Setting range (bar)	Standard setting (bar)	Adjustment (bar/turn)
MF000275	**MFTT-300-MHAR-30-G11-N350**	P1,P2,B1,B2: **G 1"** A: **G 1-1/4"** DR,LS: **G 1/4"**	**120-350**	**350**	**165**

FLOW REGULATOR

MFCZ-040-LSLR

PROPORTIONAL VALVE COMPENSATED

ATLANTIC Fluid Tech

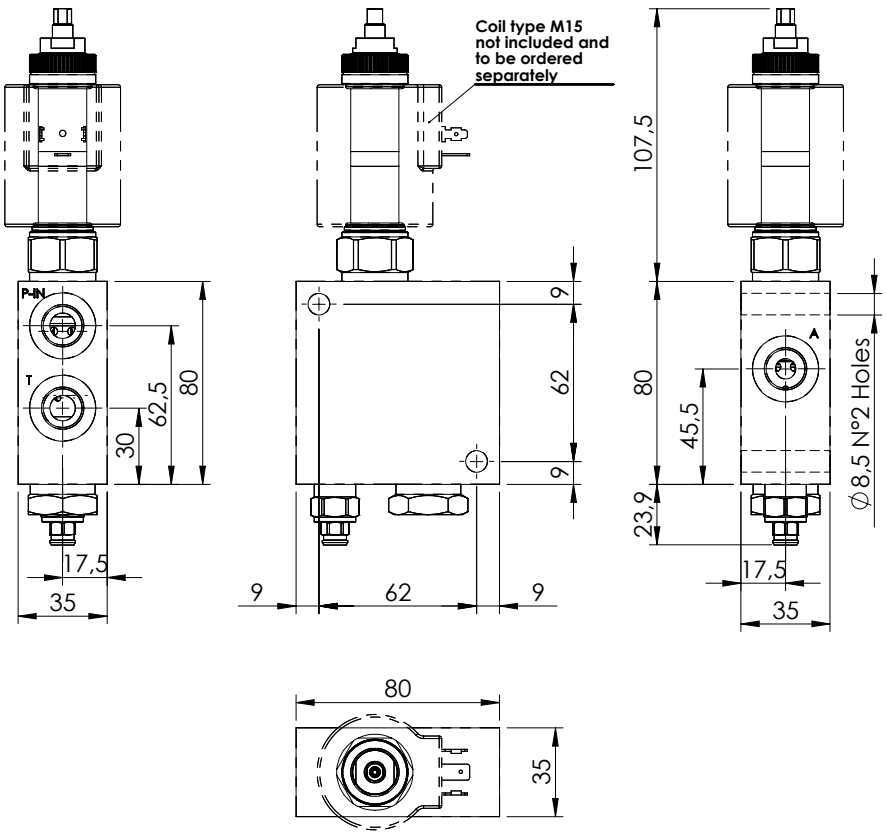

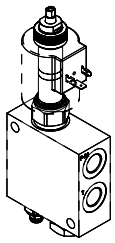

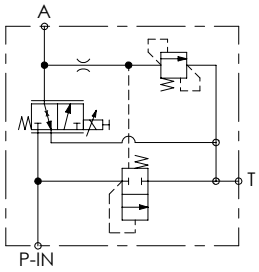

SPECIFICATIONS

Max. operating pressure:	210 bar
Rated flow:	40 l/min
Recommended PWM range:	150-180 Hz
Weight:	0,84 kg
Manifold:	Aluminium
Coil type:	M15
Max. int. leakage: 150 cm^3/min (@46 cSt)	

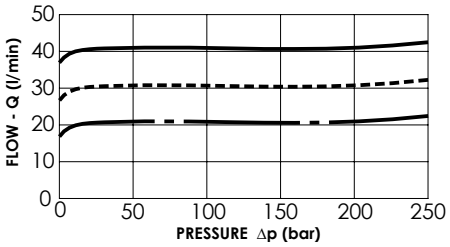

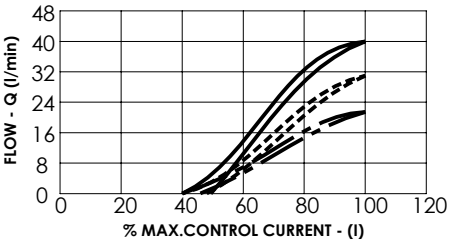

MF000294 3>2———— MF000295 3>2----- MF000296 3>2—— – ——

NOTES

Bleed air before use

Manual override screw type

See chapter 18.00.000 for coil.

ORDERING CODES

Quick code	Description	Rated flow (l/min)	Ports	Threshold current (with12VDC coil)	Max control current (with 12V DC coil)
MF000294	MFCZ-040-LSLR-40-G38-N210	40	G 3/8"	800 mA (+/-7%)	1600 mA (+/-7%)
MF000295	MFCZ-030-LSLR-30-G38-N210	30	G 3/8"	700 mA (+/-7%)	1500 mA (+/-7%)
MF000296	MFCZ-020-LSLR-20-G38-N210	20	G 3/8"	700 mA (+/-7%)	2400 mA (+/-7%)

FLOW REGULATOR

MFPC-140-AMLR

PROPORTIONAL VALVES WITH ANTICAVITATION

ATLANTIC Fluid Tech

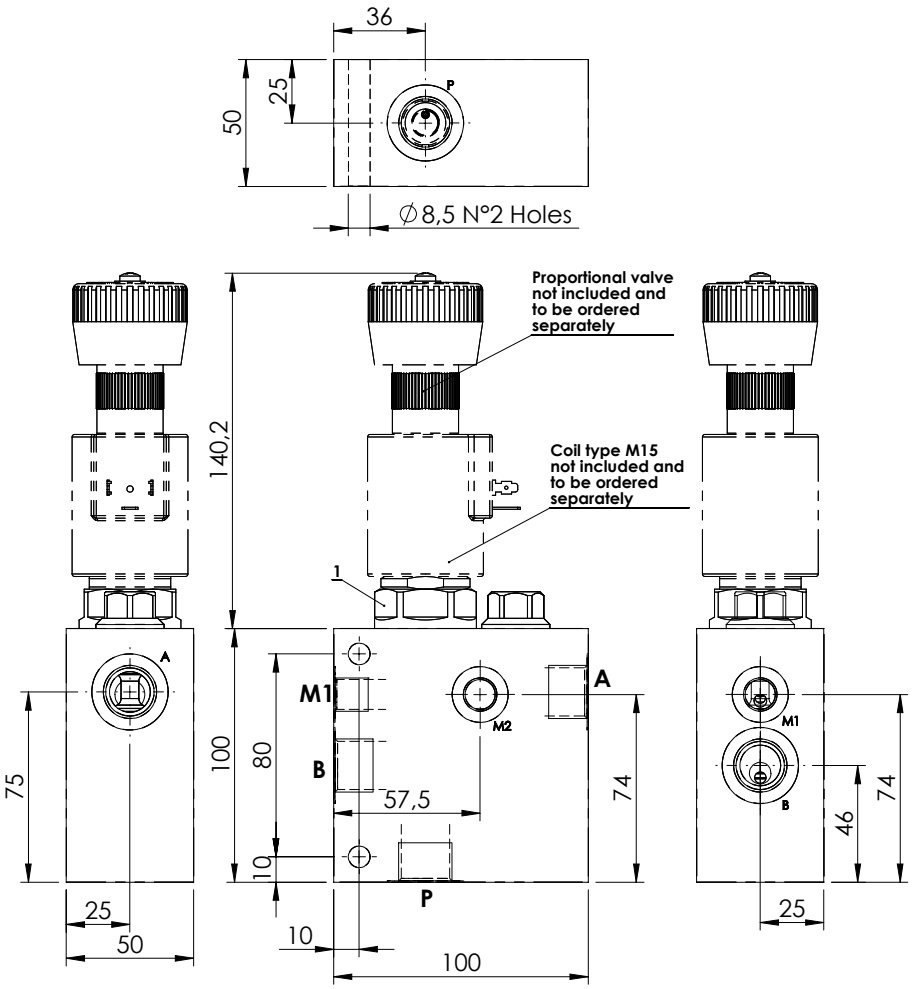

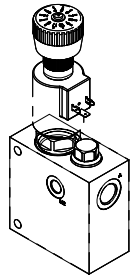

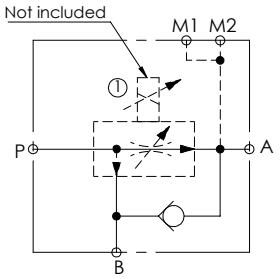

SPECIFICATIONS

Max. operating pressure:	320 bar
Rated flow:	140 l/min
Max regulated flow:	0 - 80 l/min
Manifold:	Aluminium
Weight:	1,1 kg
Coil type:	M15
Cavity type:	SAE-16-3N

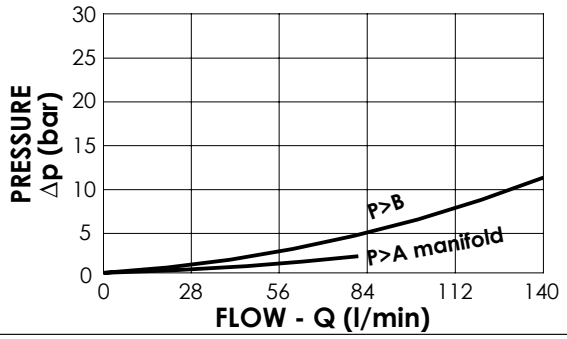

NOTES

-See chapter 18.00.000 for coil.

-See chapter 16.00.000 for proportional valve info.

ORDERING CODES

Quick code	Description	Main ports size	Standard setting (bar, Q=5 l/min)	Adjust. range (bar)	Pressure increase (bar/turn)
MF000349	MFPC-140-AMLR-80-G12-N320	P,A,T: G1/2" M: G1/4"	200	60-210	24

FLOW REGULATOR

MFPC-140-LMLR

PROPORTIONAL VALVE WITH RELIEF

ATLANTIC Fluid Tech

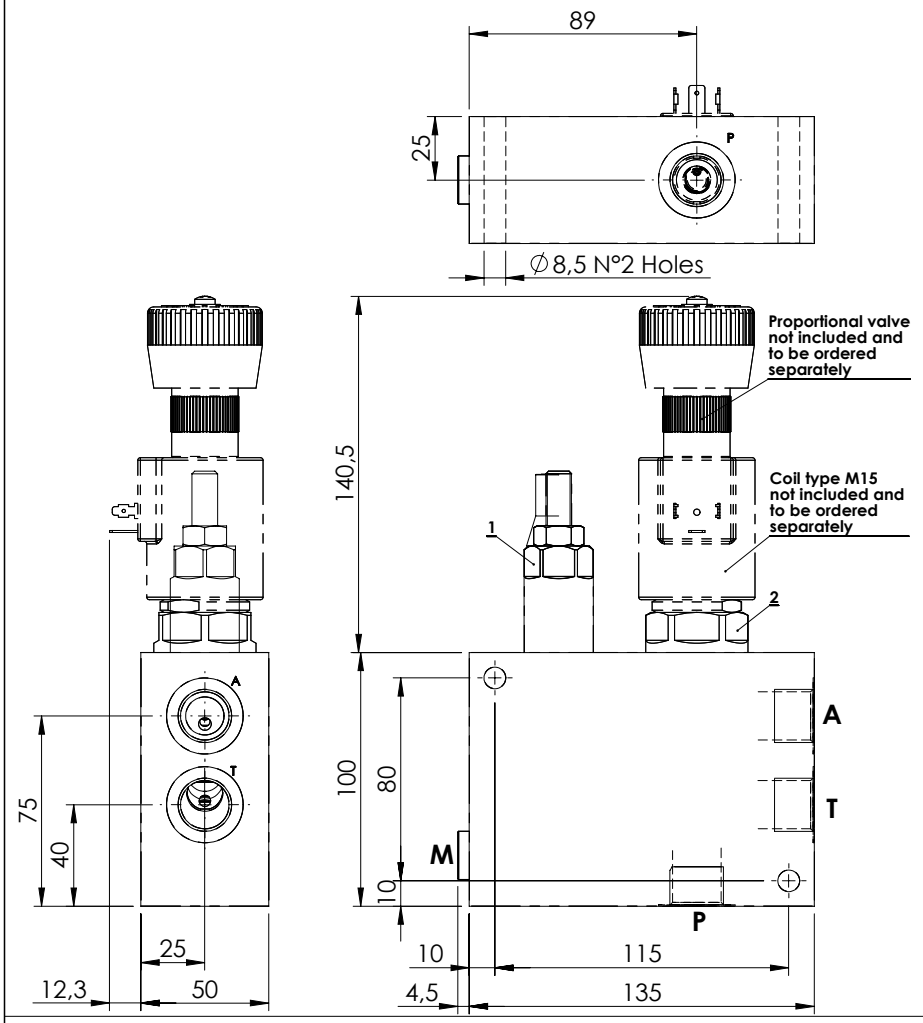

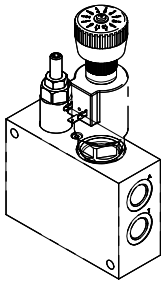

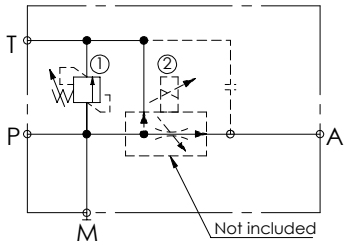

SPECIFICATIONS

Max. operating pressure:	320 bar
Rated flow:	140 l/min
Max regulated flow:	0 - 80 l/min
Manifold:	Aluminium
Weight:	1,7 kg
Coil type:	M15
Cavity type:	SAE-16-3N

SEALING CAP

Ordering code:

AT000021

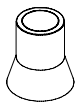

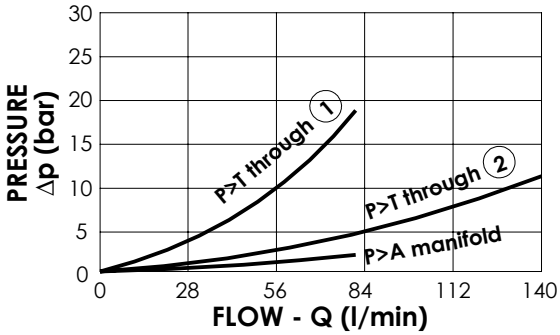

NOTES

-See chapter 18.00.000 for coil.
-See chapter 16.00.000 for proportional valve info.

ORDERING CODES

Quick code	Description	Main ports size	Standard setting (bar, Q=5 l/min)	Adjust. range (bar)	Pressure increase (bar/turn)
MF000350	**MFPC-140-LMLR-80-G12-N320**	P,A,T: **G1/2"** M: **G1/4"**	**200**	**60-210**	**24**

FLOW REGULATOR

MFPC-140-TMLR

PROPORTIONAL VALVES WITH BYPASS CHECK WITH RELIEF

ATLANTIC Fluid Tech

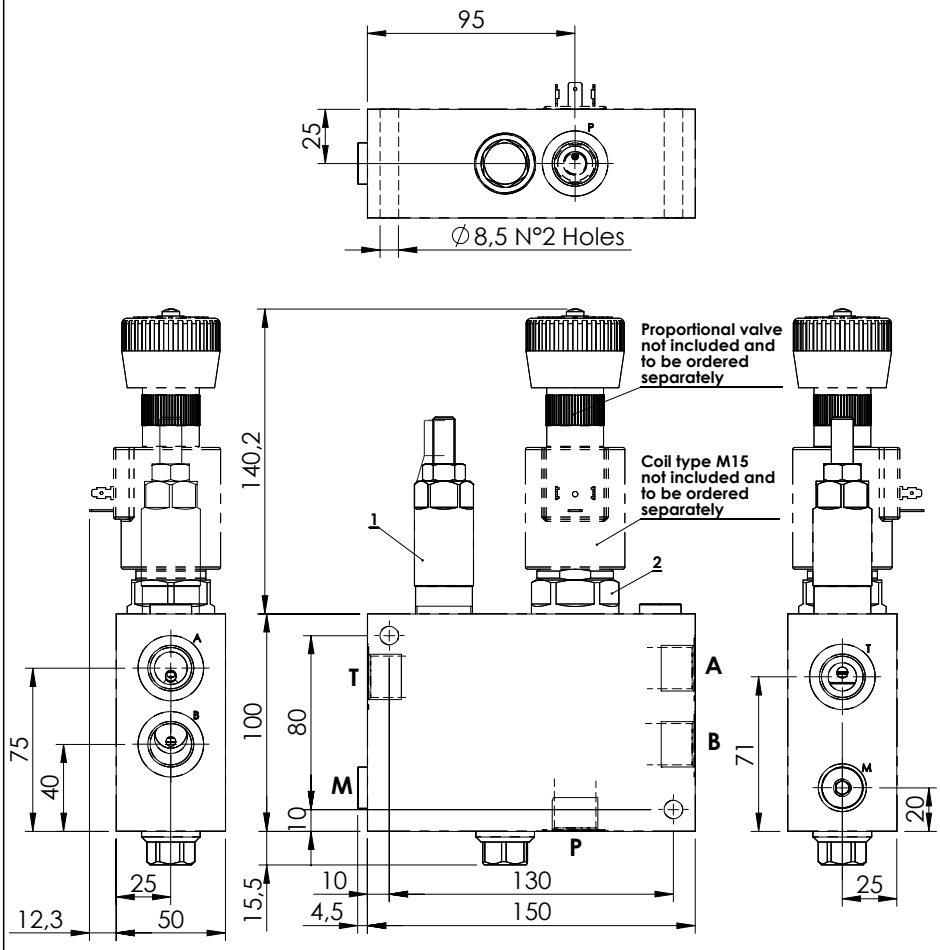

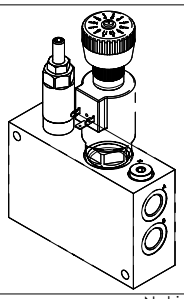

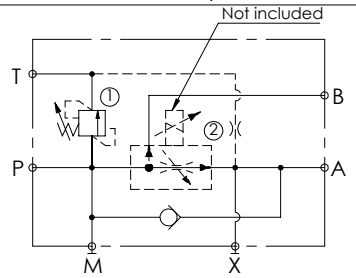

SPECIFICATIONS

Max. operating pressure:	320 bar
Rated flow:	140 l/min
Max regulated flow:	0 - 80 l/min
Manifold:	Aluminium
Weight:	2,0 kg
Coil type:	M15
Cavity type:	SAE-16-3N

SEALING CAP

Ordering code:

AT000021

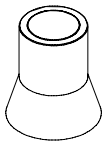

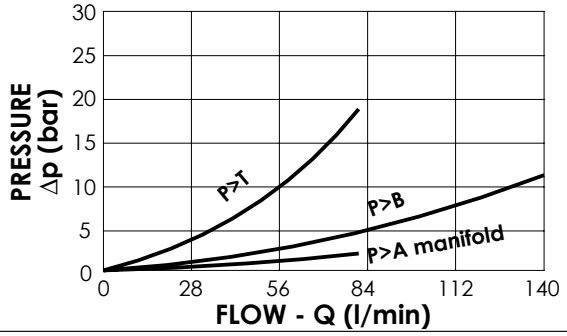

NOTES

-See chapter 18.00.000 for coil.
-See chapter 16.00.000 for proportional valve info.

ORDERING CODES

Quick code	Description	Main ports size	Standard setting (bar, Q=5 l/min)	Adjust. range (bar)	Pressure increase (bar/turn)
MF000351	**MFPC-140-TMLR-80-G12-N320**	P,A,T: **G1/2"** M: **G1/4"**	**200**	**60-210**	**24**

FLOW REGULATOR

MFPC-200-MMAR

PROPORTIONAL VALVES WITH UNLOADING WITH RELIEF

ATLANTIC Fluid Tech

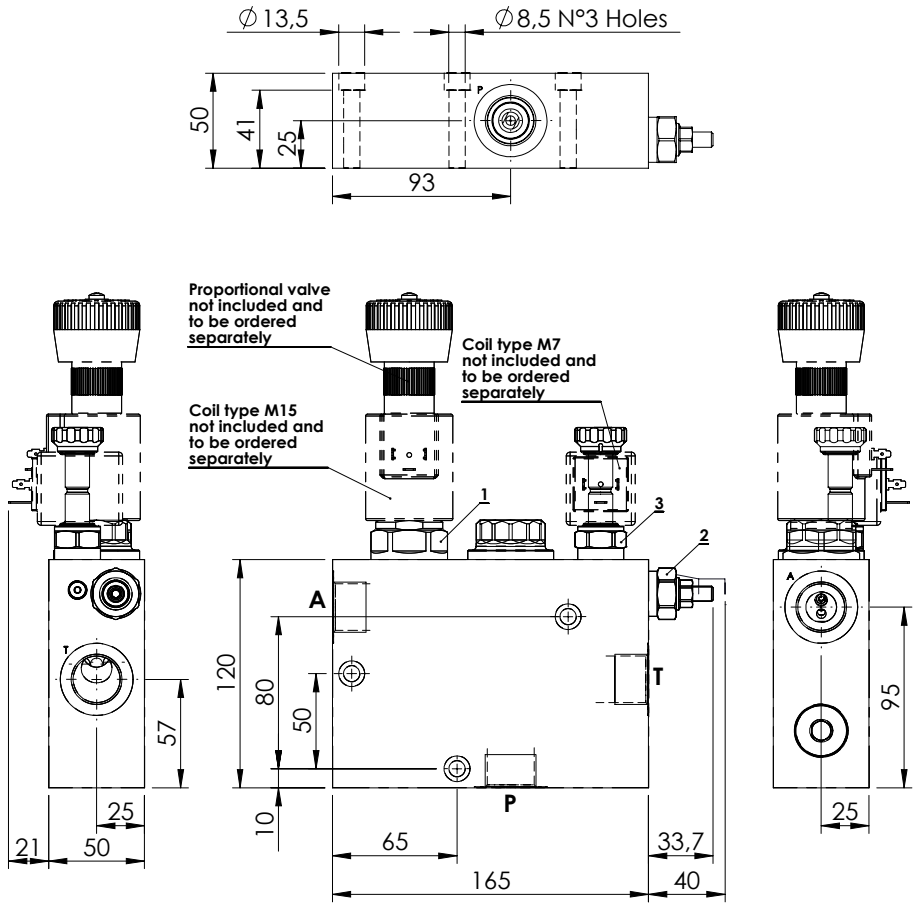

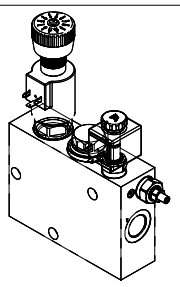

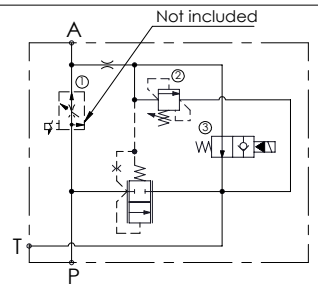

SPECIFICATIONS

Max. operating pressure:	320 bar
Rated flow:	200 l/min
Max regulated flow:	0 - 80 l/min
Manifold:	Zinc plated steel
Weight:	6,72 kg
Coil type:	M7 - M15
Cavity type:	SAE-16-3N

SEALING CAP

Ordering code:

AT000020

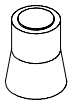

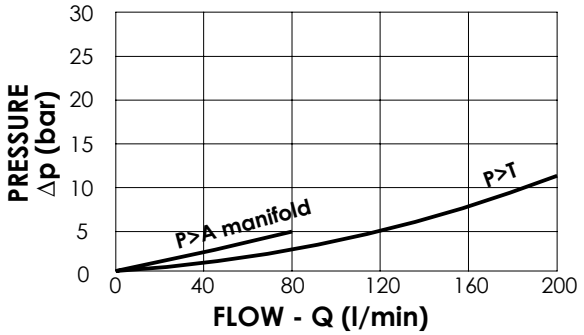

NOTES

-See chapter 18.00.000 for coils.

-See chapter 16.00.000 for proportional valve info.

ORDERING CODES

Quick code	Description	Main ports size	Standard setting (bar, Q=5 l/min)	Adjust. range (bar)	Pressure increase (bar/turn)
MF000352	**MFPC-200-MMAR-80-G12-N320**	P,T,R: **G 3/4"**	**220**	**140-350**	**142**

ATLANTIC
Fluid Tech

SECTION 14

Special Valves

MANAGEMENT SYSTEM CERTIFICATION
DNV·GL
ISO 9001 = ISO 14001
OHSAS 18001

SECTION 14

SPECIAL VALVES

Chapter	Valve type	Page
14. 1	Fan drive blocks	14.01.**000**
14. 2	Differential lock valves	14.02.**000**
14. 3	Unloading - Inloading valves	14.03.**000**
14. 4	Filter blocks	14.04.**000**
14. 5	End of stroke valves	14.05.**000**
14. 6	Pilot blocks	14.06.**000**
14. 7	Automatic Switching Valves	14.07.**000**
14. 8	Load Limiting Device	14.08.**000**

SPECIAL VALVES - FAN DRIVE BLOCKS

ATLANTIC Fluid Tech

Hydraulic scheme	Valve description	Valve type	Rated flow (l/min)	Max. pressure (bar)	Installation	Main port size or cavity type	Page
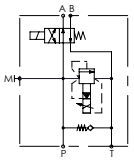	BNND-045-GEC	With proportional pressure control	45	320	In line	G 1/2"	14.01.**010**

FAN DRIVE BLOCKS

BNND-045-GEC

PROPORTIONAL PRESSURE CONTROL WITH INVERSION

ATLANTIC Fluid Tech

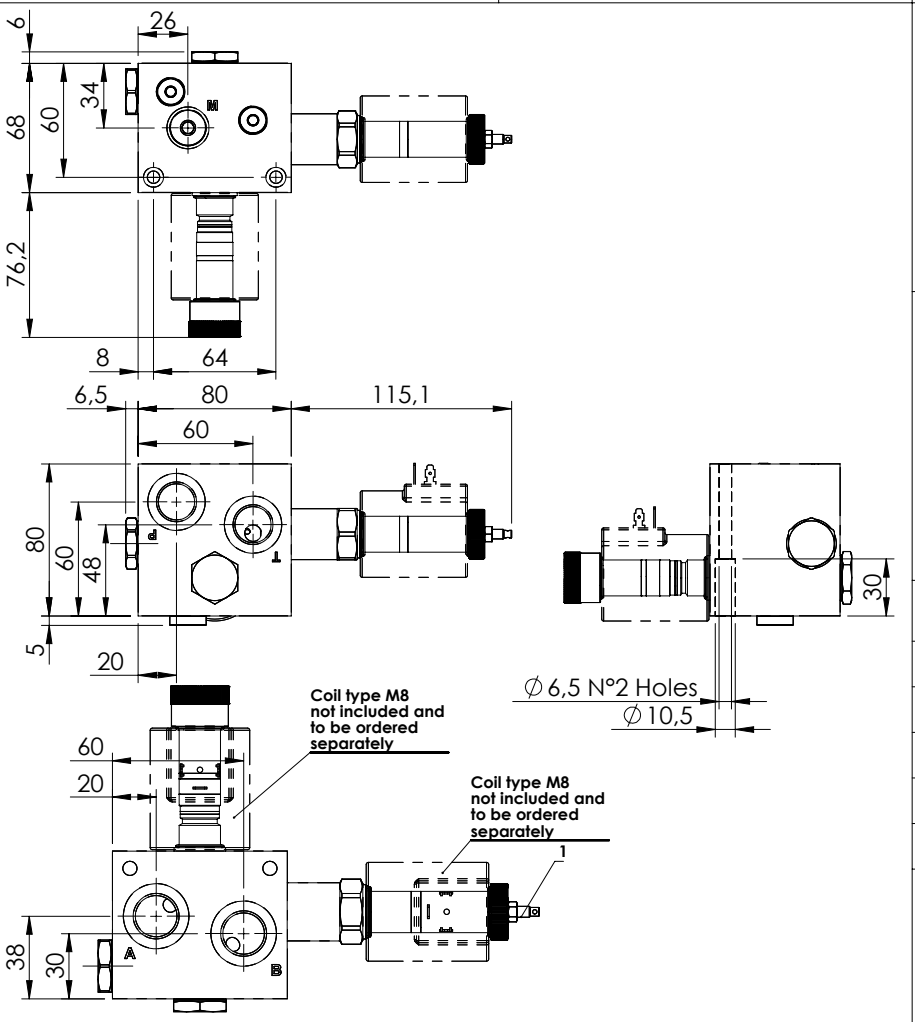

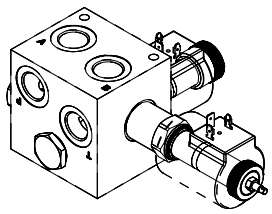

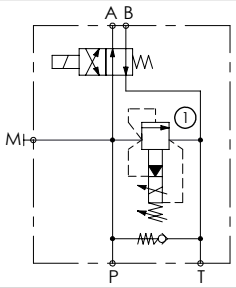

SPECIFICATIONS

Max. operating pressure:	320 bar
Rated flow:	45 l/min
Manifold:	Cast Iron
Weight:	3,28 kg
Coil:	M8

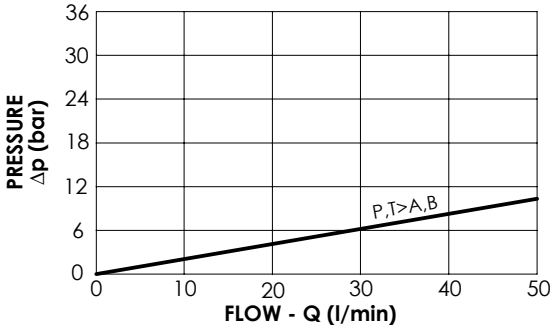

NOTES

-When valve 1 is energized the pressure lowers from the setting to.

-See chapter 18.00.000 for coil.

ORDERING CODES

Quick code	Description	Main ports size	Standard setting (bar)	Setting range (bar)
BD000198	**BNND-045-GEC-NP-G12-N320**	P,T,A,B:**G1/2"** M:**G1/4"**	**210**	**100-320**

SECTION 14. 2

SPECIAL VALVES - DIFFERENTIAL LOCK VALVES

Hydraulic scheme	Valve description	Valve type	Rated flow (l/min)	Max. pressure (bar)	Installation	Main port size or cavity type	Page
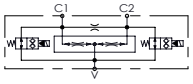	MFDT-150-BFAR-55	With electric bypass	150	350	In line	G 1/2"	14.02.**010**
	MFDT-150-BFAR-95	With electric bypass	150	350	In line	G 1/2"	14.02.**010**
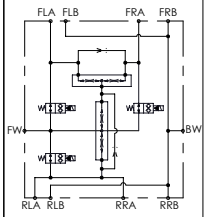	BNND-200-AED	With electric bypass for three motors transmission	200	500	In line	G 3/4"	14.02.**020**

DIFFERENTIAL LOCK VALVE

MFDT-150-BFAR

WITH ELECTRIC BYPASS

ATLANTIC Fluid Tech

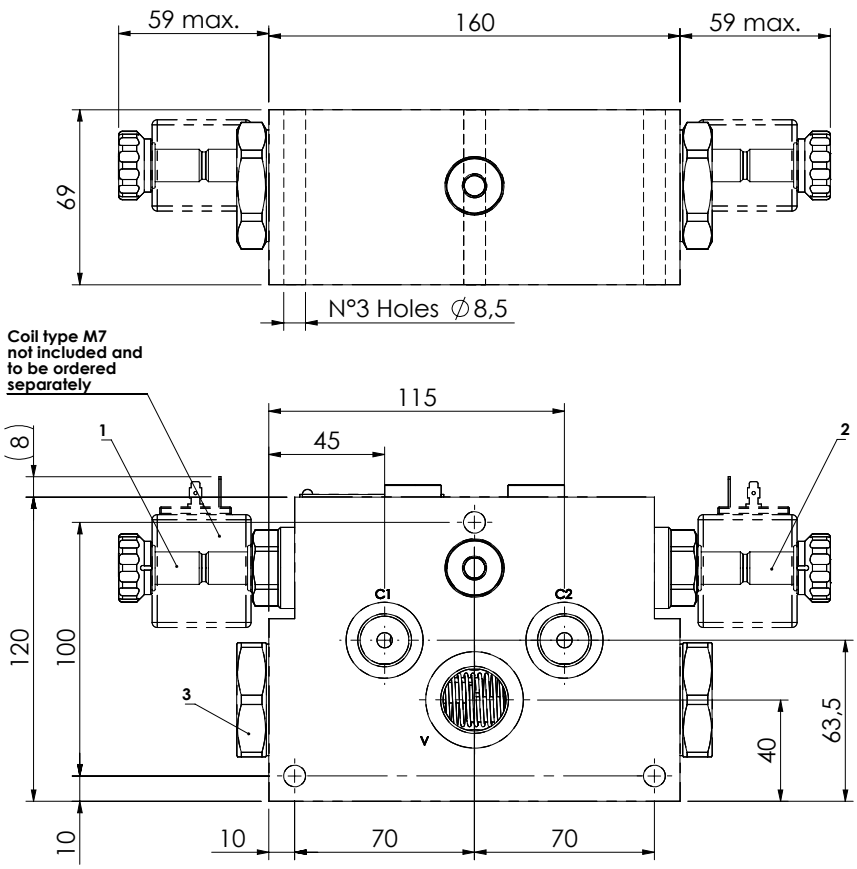

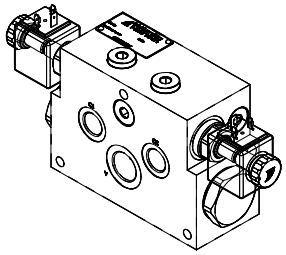

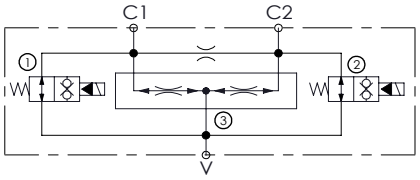

SPECIFICATIONS

Max. operating pressure:	350 bar
Rated flow:	150 l/min
Regulated Flow:	See table
Manifold:	Steel
Weight:	9 kg
Coil:	M7

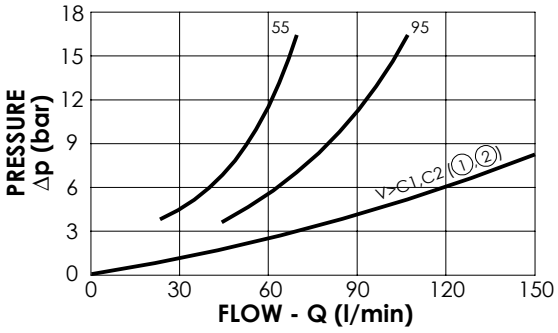

NOTES

-For other flow ranges contact AFT sales network.
-See chapter 18.00.000 for coil.

ORDERING CODES

Quick code	Description	Main ports size	Regulated flow range (l/min)	
MF000347	**MFDT-150-BFAR-55-G34-N350**	C1,C2: **G1/2"** V: **G3/4"**	**28-55**	
MF000348	**MFDT-150-BFAR-95-G34-N350**	C1,C2: **G1/2"** V: **G3/4"**	**56-95**	

DIFFERENTIAL LOCK VALVE

BNND-200-AED

WITH ELECTRIC BYPASS FOR THREE MOTORS TRANSMISSION

ATLANTIC Fluid Tech

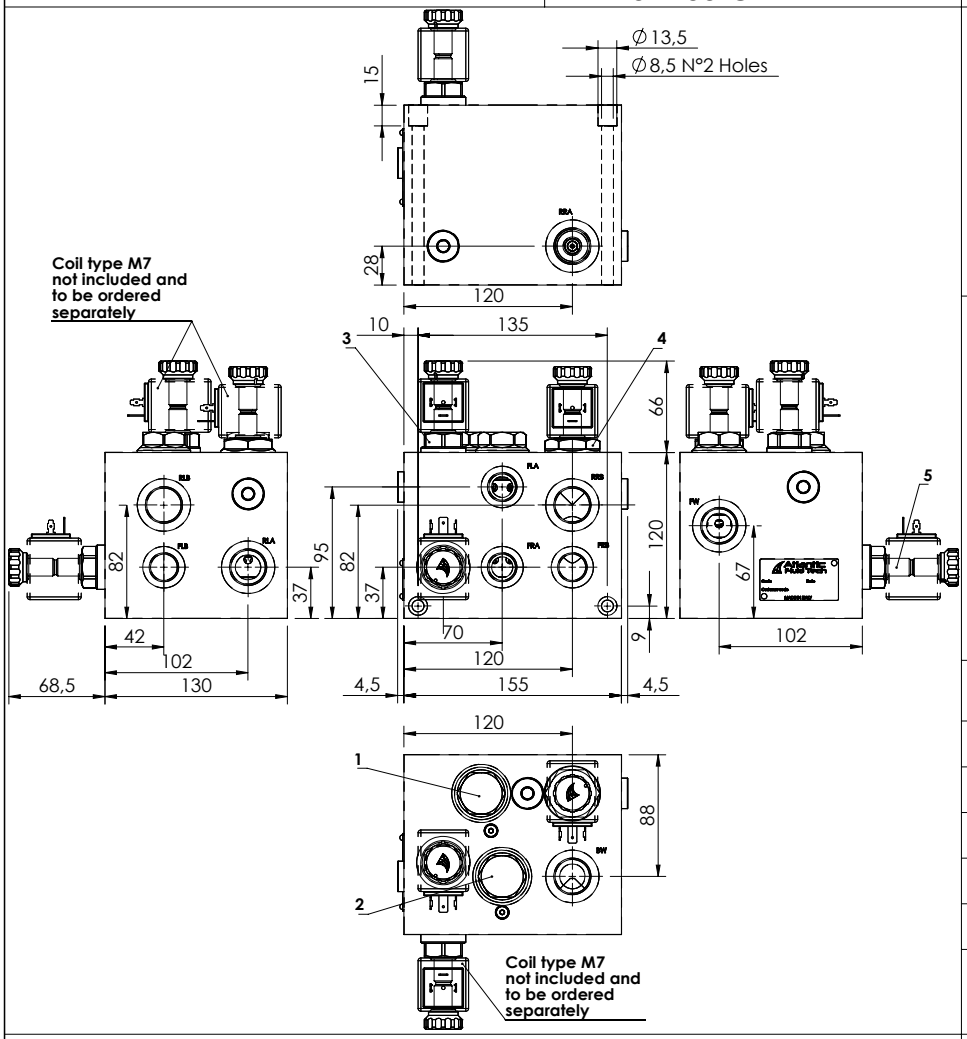

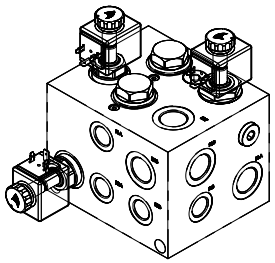

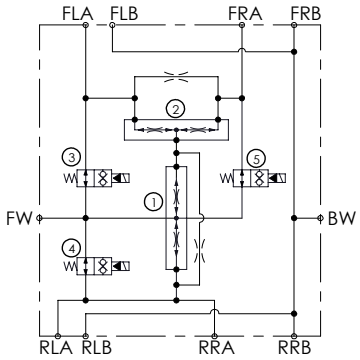

SPECIFICATIONS

Max. operating pressure:	500 bar
Rated flow:	200 l/min
Manifold:	Steel
Weight:	16,7 kg
Coil:	M7

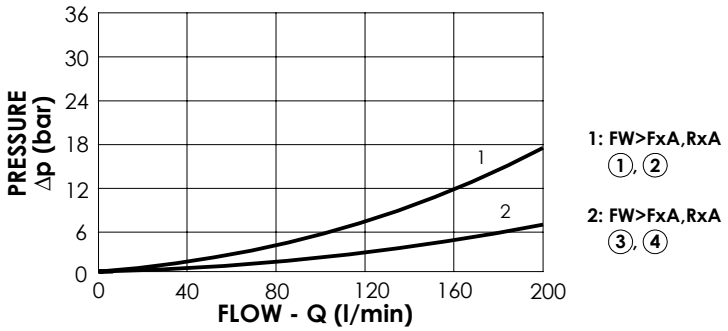

NOTES

-For other flow ranges contact AFT sales network

-See chapter 18.00.000 for coil.

ORDERING CODES

Quick code	Description	Main ports size	Flow diverter ratio:	Inlet range flow (l/min)
BD000199	BNND-200-AED-NP-G34-N500	FW,BW,RLA,RLB,RRA,RRB:**G 3/4"** FLA,FLB,FRA,FRB:**G 1/2"**	① **50%-50%** ② **33%-66%**	**48 - 170**

SECTION 14. 3

SPECIAL VALVES - UNLOADING/INLOADING VALVES

ATLANTIC Fluid Tech

Hydraulic scheme	Valve description	Valve type	Rated flow (l/min)	Max. pressure (bar)	Installation	Main port size or cavity type	Page
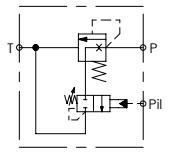	MTTP-120-TLSN	Spool type, pump unloading, piloted	120	210	In line	G 1/2"	14.03.**010**
	MTTP-200-TLSN	Spool type, pump unloading, piloted	200	210	In line	G 3/4"	14.03.**010**
	MTTP-250-TLSN	Spool type, pump unloading, piloted	250	210	In line	G 1"	14.03.**010**
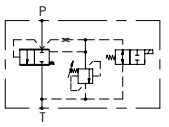	MFTS-200-DHAN	Solenoid operated unloading valve, with relief	200	250	In line	G 3/4"	14.03.**020**
	MFTS-200-DHAN	Solenoid operated unloading valve, with relief	200	250	In line	G1"	14.03.**030**
	MFTS-200-DHAN	Solenoid operated unloading valve, with relief	200	350	In line	G 1"	14.03.**040**
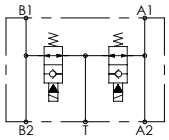	BNND-040-LE		40	210	In line	G 1/2"	14.03.**050**
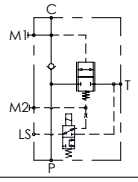	MTTE-150-SLSN	Solenoid operated unloading valve, piloted	150	350	In line	1 1/16"-15 UNF	14.03.**060**
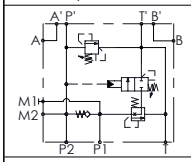	MTSB-150-SDSN	For Cetop 5	150	350	Flanged	Cetop 5	14.03.**070**
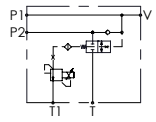	MFTS-150-EFCE		150	350	In line	1 1/16"-12 UNF	14.03.**080**
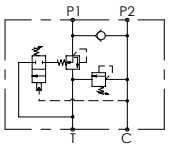	MTSD-150-TLSN		150	300	In line	G 3/4"	14.03.**090**

UNLOADING VALVE

MTTP-XXX-XLSN

PUMP UNLOADING PILOTED

ATLANTIC Fluid Tech

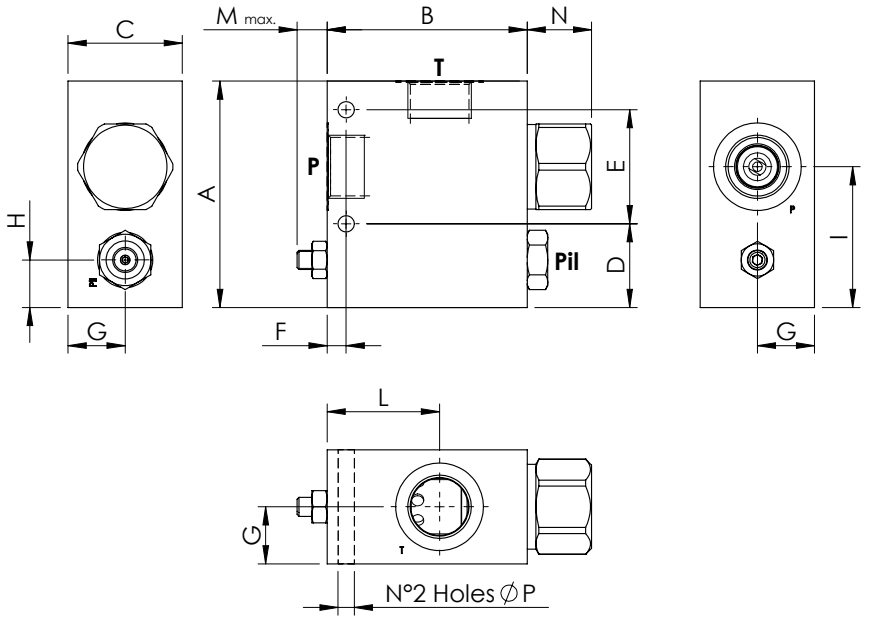

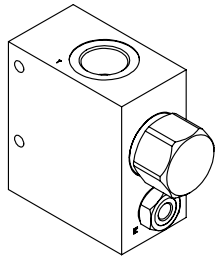

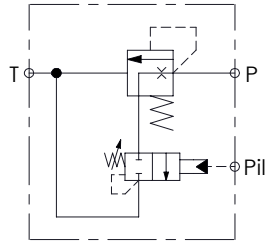

SPECIFICATIONS

Max. operating pressure:	210/350 bar
Rated flow:	See table
Manifold:	See table
Weight: Aluminium 2,49 kg; Steel 5,7 kg	

A	B	C	D	E	F	G	H	I	L	M	N	P	CODE
119	105	60	44	60	10	30	25	74	59	15	33,8	8,5	MT000007 MT000022
105	100	40	35	45	15	20	16	56	52	19,5	18,8	8,5	MT000015
90	100	40	35	45	15	20	16	56	52	19,5	18,8	8,5	MT000014

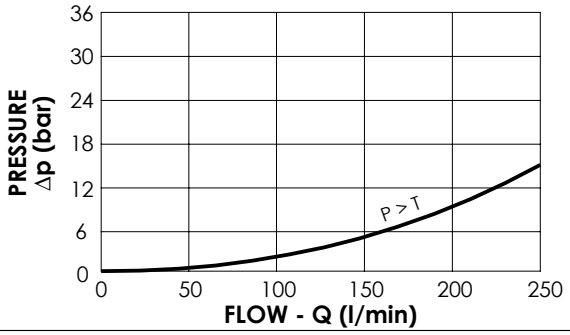

ORDERING CODES

Quick code	Description	Manifold material	Main ports size	Nominal flow (l/min)	Standard setting (bar, Q=5 l/min)	Adjust. range (bar)	Pressure increase (bar/turn)
MT000007	MTTP-250-TLSN-NP-G10-N210	Aluminium	P,T:G 1" Pil:G 1/4"	250	200	70 -210	49
MT000015	MTTP-200-TLSN-NP-G34-N210	Aluminium	P,T:G 3/4" Pil:G 1/4"	200	200	70 -210	49
MT000014	MTTP-120-TLSN-NP-G12-N210	Aluminium	P,T:G 1/2" Pil:G 1/4"	120	130	70 -210	49
MT000022	MTTP-250-SLSN-NP-G10-N350	Steel	P,T:G 1" Pil:G 1/4"	250	200	70 -210	49

UNLOADING VALVE

MFTS-200-DHAN

SOLENOID OPERATED UNLOADING VALVE WITH RELIEF

ATLANTIC Fluid Tech

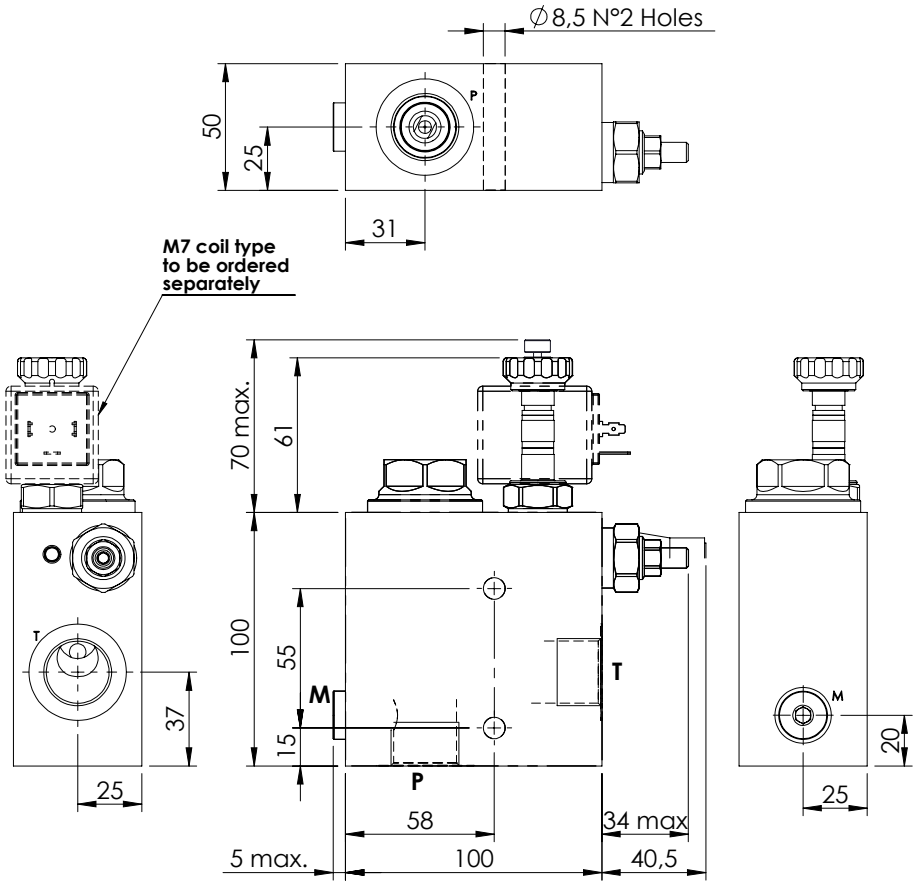

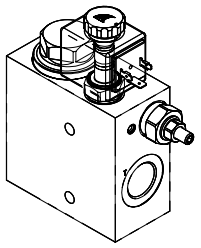

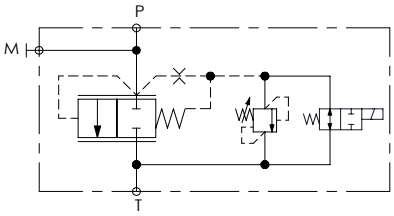

SPECIFICATIONS

Max. operating pressure:	250 bar
Rated flow:	200 l/min
Manifold:	Aluminium
Weight:	1,69 kg
Coil type:	M7

SEALING CAP

Ordering code:
AT000020

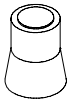

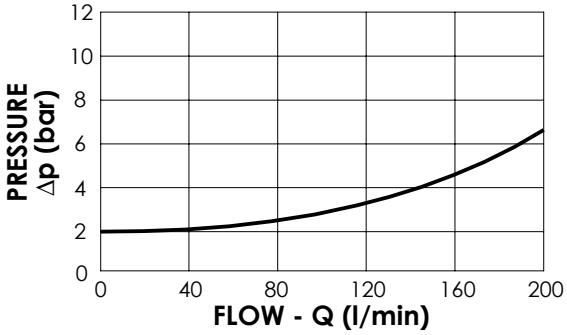

NOTES

Internal leakage: 80 cc/min
Available in steel version for 350 bar maximum operating pressure
See chapter 18.00.000 for coil.

OPTIONS

Standard

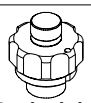

Push style override

ORDERING CODES

Quick code	Description	Ports size	Standard setting (bar, Q=5 l/min)	Adjust. range (bar)	Pressure increase (bar/turn)	Options
MF000038	MFTS-200-DHAN-NP-G34-N250	P,T:G 3/4" M:G 1/4"	200	140-350	142	Standard
MF000044	MFTS-200-DHAE-NP-G34-N250	P,T:G 3/4" M:G 1/4"	200	140-350	142	Push style override

UNLOADING VALVE

MFTS-200-DHAN

SOLENOID OPERATED UNLOADING VALVE WITH RELIEF

ATLANTIC Fluid Tech

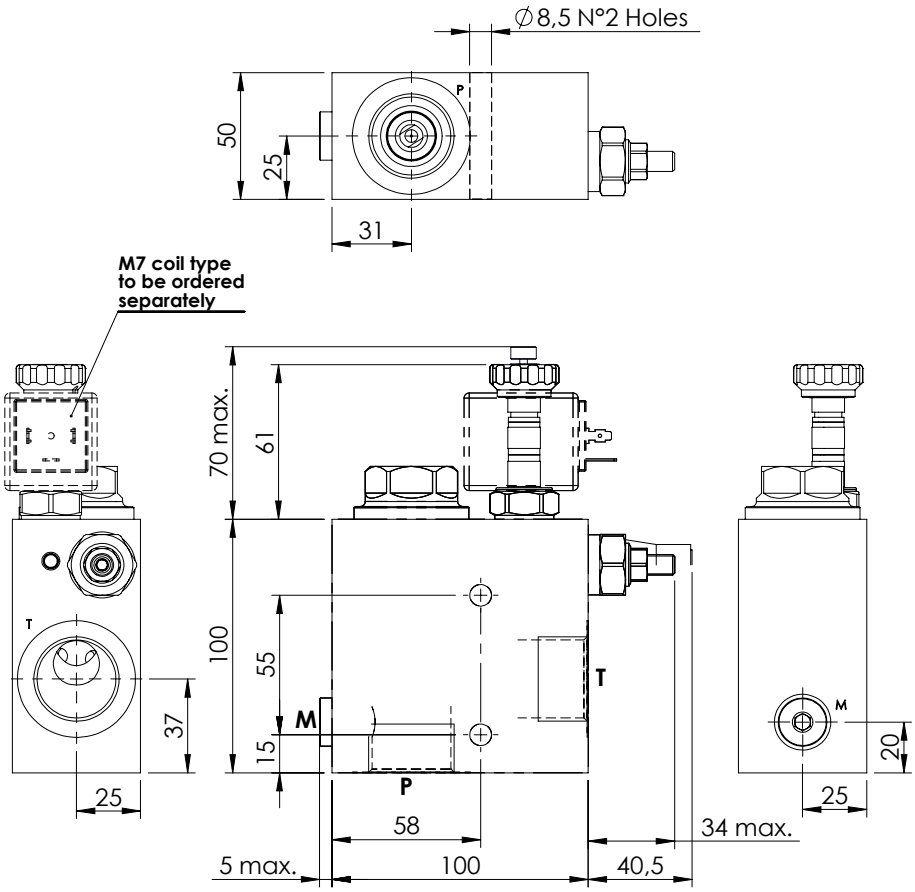

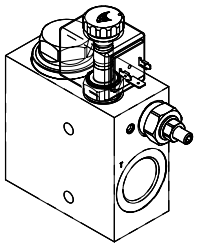

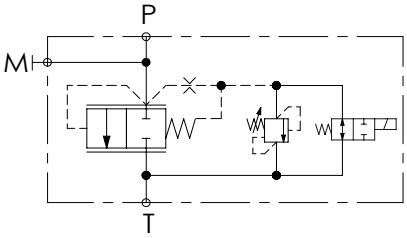

SPECIFICATIONS

Max. operating pressure:	**250 bar**
Rated flow:	**200 l/min**
Manifold:	**Aluminium**
Weight:	**1,65 kg**
Coil type:	**M7**

SEALING CAP

Ordering code:

AT000020

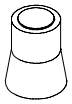

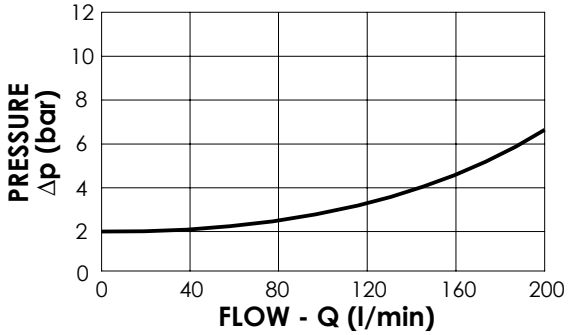

NOTES

Internal leakage: 80 cc/min
Available in steel version for 350 bar maximum operating pressure
See chapter 18.00.000 for coil.

OPTIONS

Standard

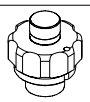

Push style override

ORDERING CODES

Quick code	Description	Ports size	Standard setting (bar, Q=5 l/min)	Adjust. range (bar)	Pressure increase (bar/turn)	Options
MF000039	**MFTS-200-DHAN-NP-G10-N250**	P,T:**G 1"** M:**G 1/4"**	**200**	**140-350**	**142**	**Standard**
MF000043	**MFTS-200-DHAE-NP-G10-N250**	P,T:**G 1"** M:**G 1/4"**	**200**	**140-350**	**142**	**Push style override**

UNLOADING VALVE

MFTS-200-DHAN

SOLENOID OPERATED UNLOADING VALVE WITH RELIEF

ATLANTIC Fluid Tech

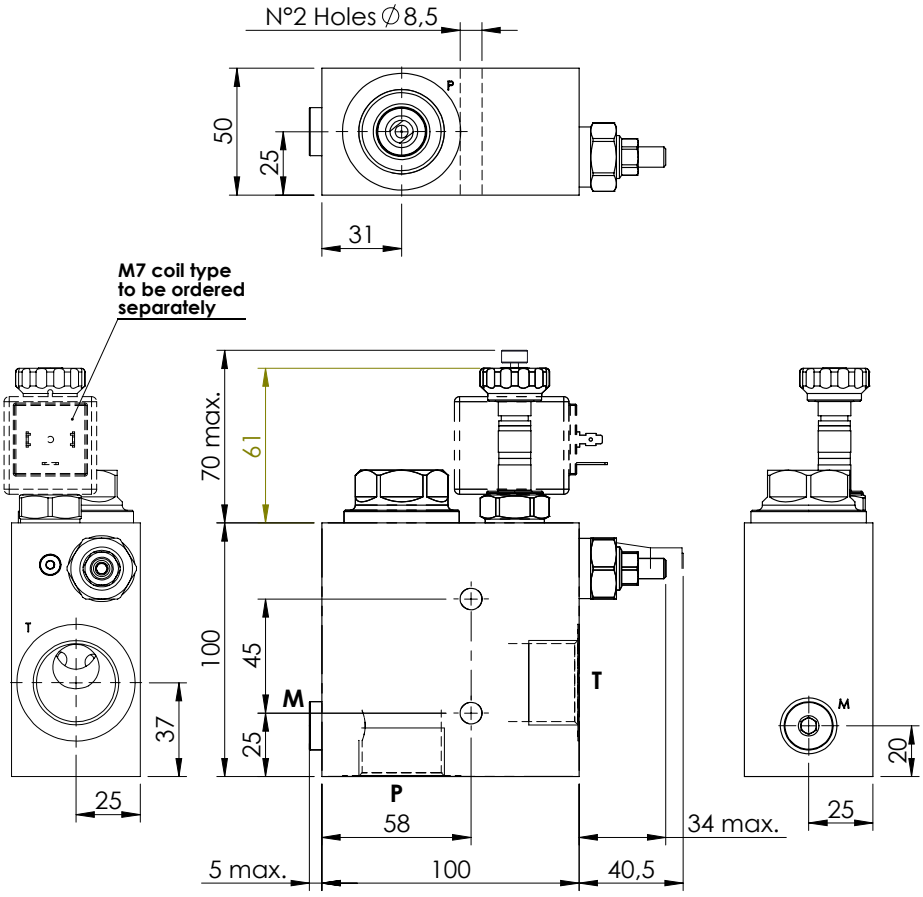

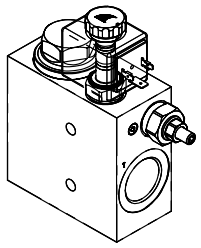

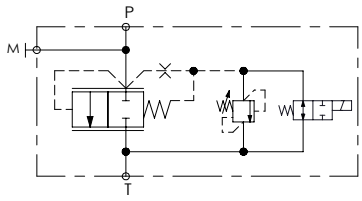

SPECIFICATIONS

Max. operating pressure:	350 bar
Rated flow:	200 l/min
Manifold:	Steel
Weight:	3,57 kg

SEALING CAP

Ordering code:

AT000020

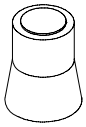

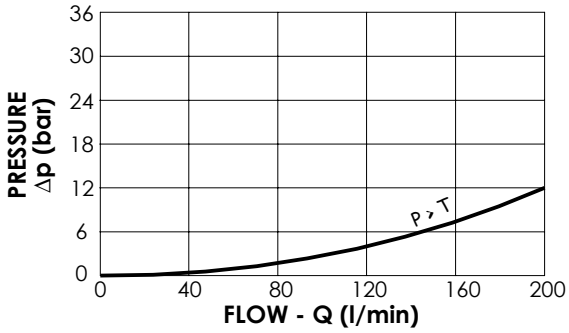

NOTES

See chapter 18.00.000 for coil.

OPTIONS

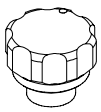

Standard

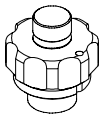

Push style override

ORDERING CODES

Quick code	Description	Ports size	Standard setting (bar, Q=5 l/min)	Adjust. range (bar)	Pressure increase (bar/turn)	Options
MF000083	MFTS-200-DHAN-NP-G10-N350	P,T:G 1" M:G 1/4"	350	140-350	142	Standard
MF000103	MFTS-200-DHAE-NP-G10-N350	P,T:G 1" M:G 1/4"	350	140-350	142	Push style override

UNLOADING VALVE

BNND-040-LE

ATLANTIC Fluid Tech

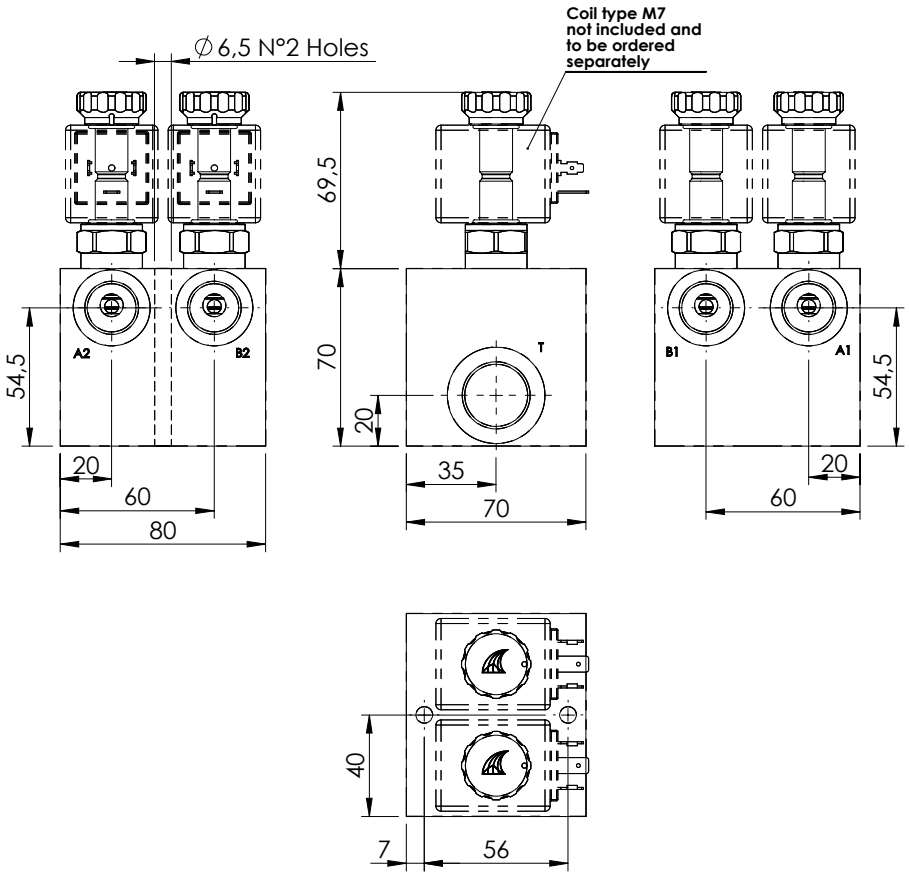

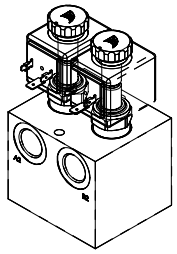

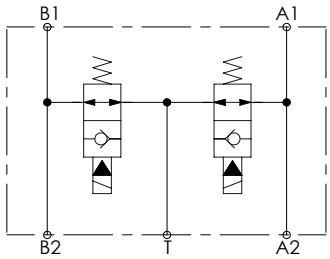

SPECIFICATIONS

Max. operating pressure:	**210 bar**
Rated flow:	**40 l/min**
Manifold:	**Aluminium**
Weight:	**1,1 kg**
Coil:	**M7**

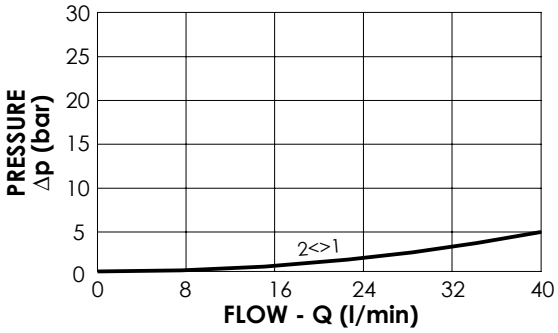

B1,B2,A1,A2 →T

NOTES

See chapter 18.00.000 for coil.

ORDERING CODES

Quick code	Description	Main ports size	
BD000200	**BNND-040-LE-NP-G12-N210**	A1,A2,B1,B2: **G1/2"** T: **G3/4"**	

UNLOADING VALVE

MTTE-150-SLSN

PUMP UNLOADING PILOTED

ATLANTIC Fluid Tech

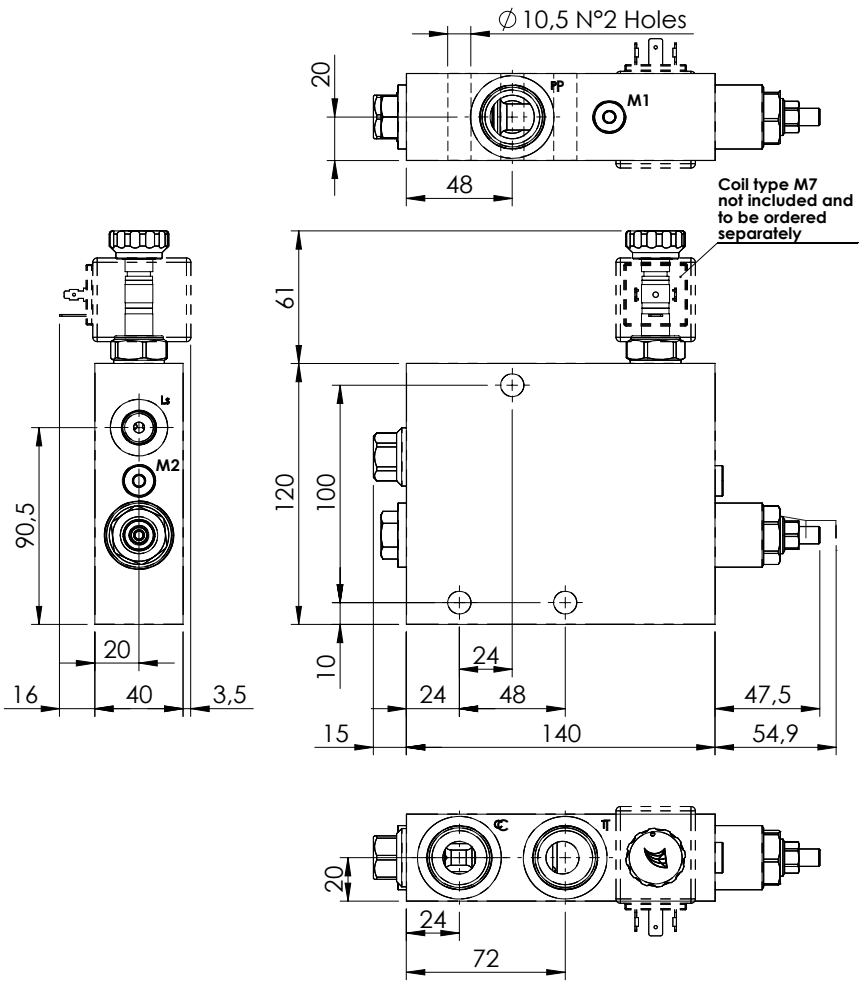

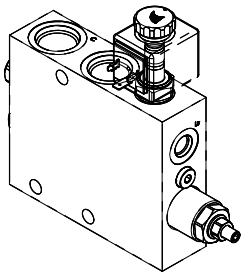

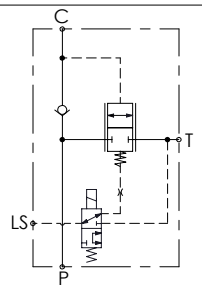

SPECIFICATIONS

Max. operating pressure:	350 bar
Rated flow:	150 l/min
Manifold:	Steel
Weight:	4,69 Kg
Coil:	M7

SEALING CAP

Ordering code:
AT000020

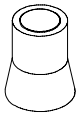

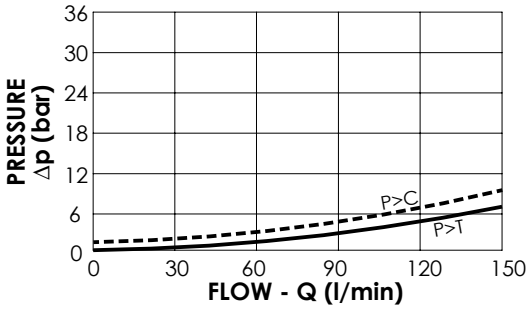

NOTES

See chapter 18.00.000 for coil.

ORDERING CODES

Quick code	Description	Main ports size	
MT000028	MTTE-150-SLSN-NP-U11-N350	P,C,T:**1 1/16" UNF-2B** LS: **9/16" UNF-2B**	

UNLOADING VALVE

MTSB-150-SDSN

CETOP 5

ATLANTIC Fluid Tech

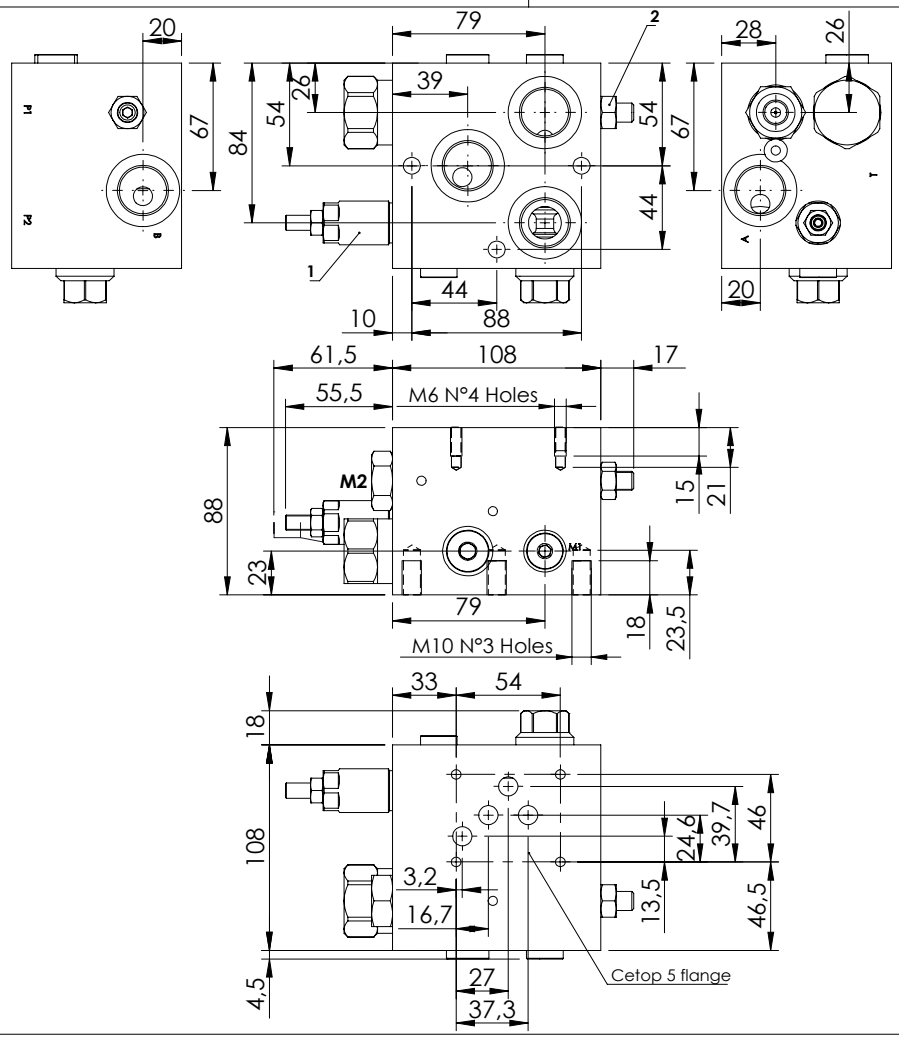

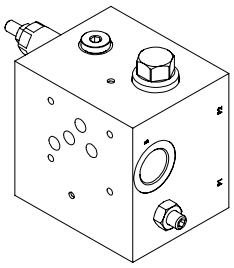

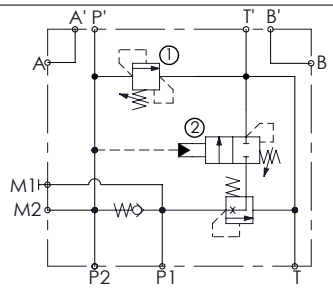

SPECIFICATIONS

Max. operating pressure:	**350 bar**
Rated flow:	**150 l/min**
Manifold:	**Steel**
Weight:	**7,25 kg**

SEALING CAP

Ordering code:

AT000020

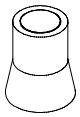

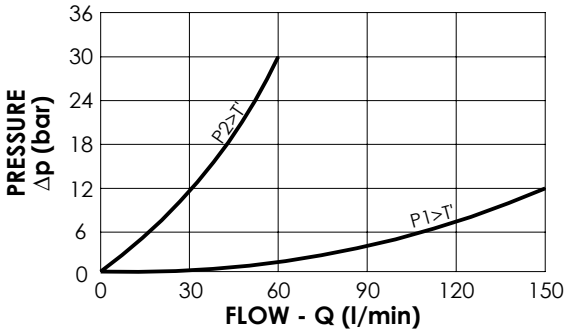

NOTES

P2 > P' : 50 l/min

P1 > P' : 100 l/min

Max flow ① : 30 l/min

ORDERING CODES

Quick code	Description	Main ports size	Standard setting (bar, Q=5 l/min)	Adjust. range (bar)	Pressure increase (bar/turn)
MT000029	**MTSB-150-SDSN-NP-G34-N350**	A,B,P1,P2,T: **G3/4"** A',B',P',T': **Cetop 5** M1,M2: **G1/4"**	① **200** ② **50**	① **50-210** ② **20-100**	① **42** ② **23**

UNLOADING VALVE

MFTS-150-EFCE

SOLENOID OPERATED

ATLANTIC Fluid Tech

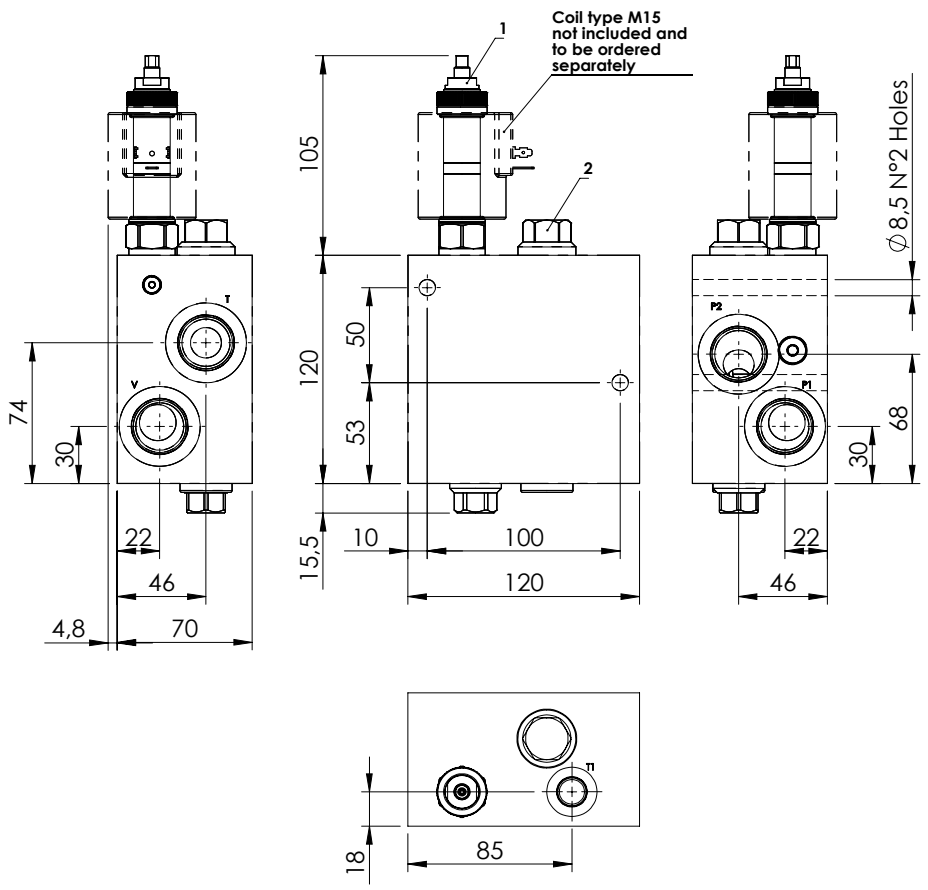

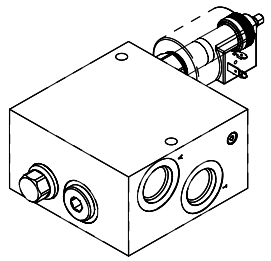

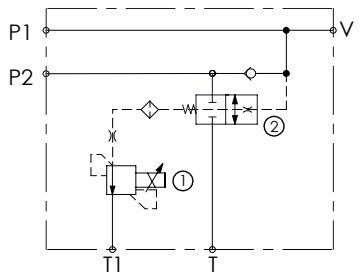

SPECIFICATIONS

Max. operating pressure:	**350 bar**
Rated flow:	**150 l/min**
Manifold:	**Steel**
Weight:	**7,1 kg**
Coil type:	**M5**

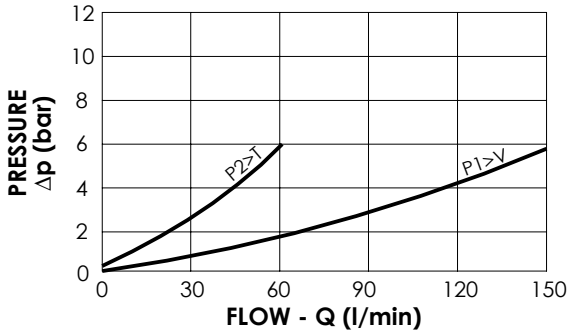

NOTES

-See chapter 18.00.000 for coil.

ORDERING CODES

Quick code	Description	Main Ports Size	Standard setting (bar)	Setting range (bar)
MF000345	**MFTS-150-EFCE-NP-U11-N350**	V,P1,P2,T:**1" 1/16-12 UNF** T1:**9/16-18 UNF**	**30**	**30-350**

UNLOADING VALVE

MTSD-150-TLSN

ATLANTIC Fluid Tech

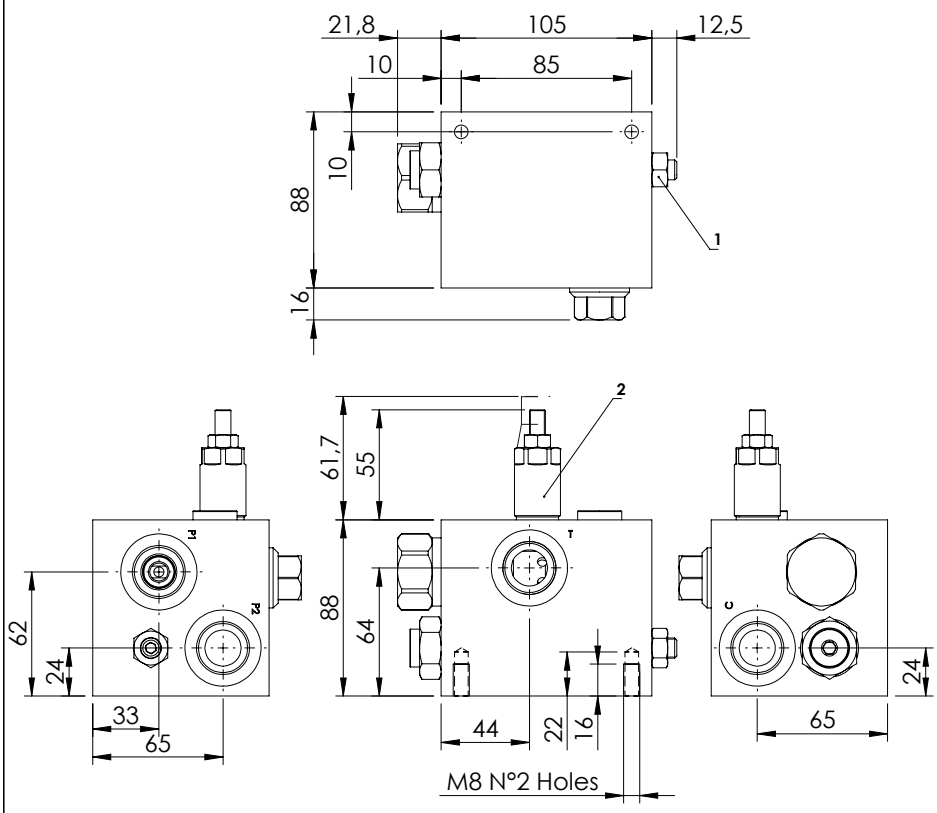

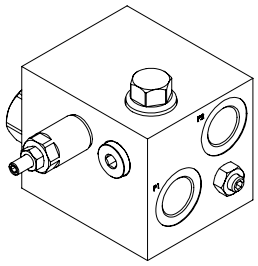

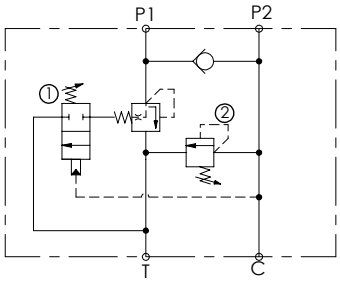

SPECIFICATIONS

Max. operating pressure:	300 bar
Rated flow:	150 l/min
Manifold:	See table
Weight:	Aluminium 2,54 kg;Steel 5,9 kg

SEALING CAP

Ordering code:
AT000020

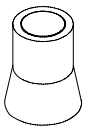

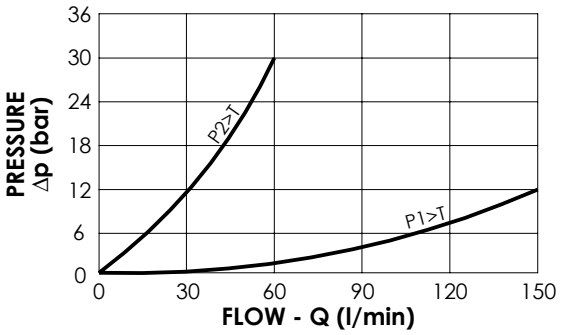

NOTES

ORDERING CODES

Quick code	Description	Manifold material	Main ports size	Standard setting (bar, Q=5 l/min)	Adjust. range (bar)	Pressure increase (bar/turn)
MT000012	**MTSD-150-TLSN-00-G34-N300**	**Aluminium**	P1,P2,C,T: **G3/4"**	① **50** ② **300**	①**15-100** ②**100-350**	①**23** ②**91**
MT000016	**MTSD-150-SLSN-00-G34-N300**	**Steel**	P1,P2,C,T: **G3/4"**	① **50** ② **300**	①**15-100** ②**100-350**	①**23** ②**91**

SPECIAL VALVES - FILTER BLOCKS

ATLANTIC Fluid Tech

Hydraulic scheme	Valve description	Valve type	Rated flow (l/min)	Max. pressure (bar)	Installation	Main port size or cavity type	Page
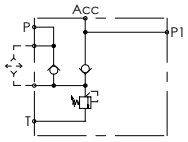	BPNN-025-LLU		25	100	In line	G 1/4"	14.04.**010**
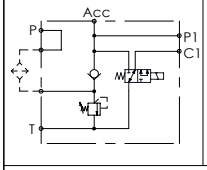	BPNN-025-LLEU		25	100	In line	JIS 1/4"	14.04.**020**

FILTER VALVE

BPNN-025-LLU

ATLANTIC Fluid Tech

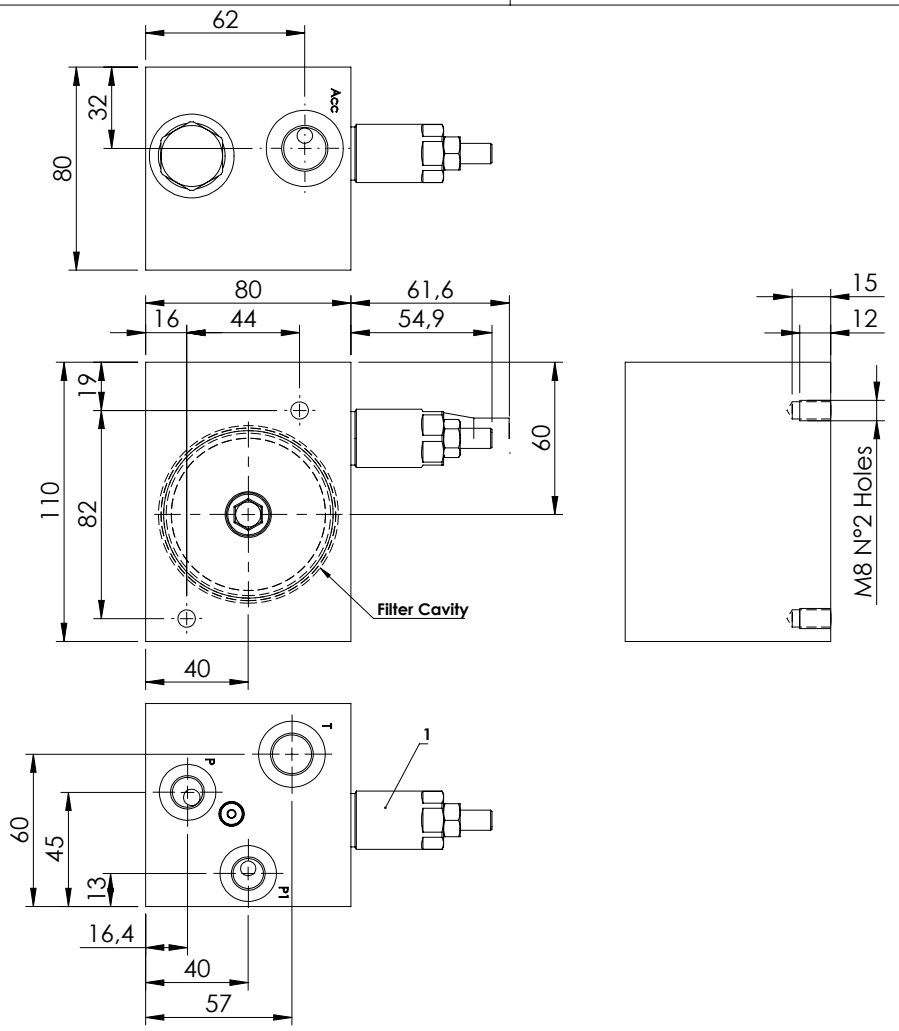

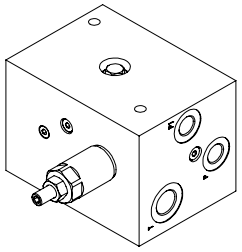

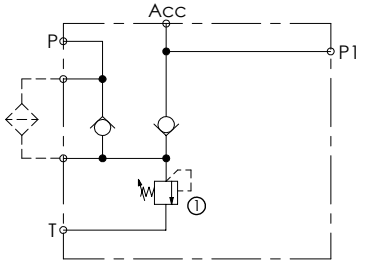

SPECIFICATIONS

Max. operating pressure:	100 bar
Rated flow:	25 l/min
Manifold:	Aluminium
Weight:	1,7 kg

SEALING CAP

Ordering code:

AT000020

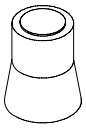

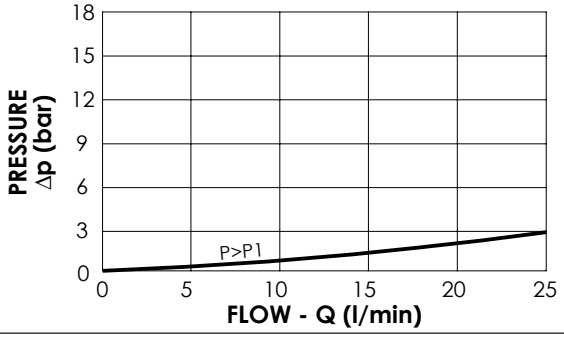

NOTES

-For filter cavity information or special version ask AFT sales network.

ORDERING CODES

Quick code	Description	Main ports size	Standard setting (bar, Q=5 l/min)	Adjust. range (bar)	Pressure increase (bar/turn)
BP000109	**BPNN-025-LLU-NP-G38-N100**	P1,P: **G 1/4"** T: **G 3/8"** Acc: **M18x1,5**	**25**	**10-50**	**10**

FILTER VALVES

BPNN-025-LLEU

ATLANTIC Fluid Tech

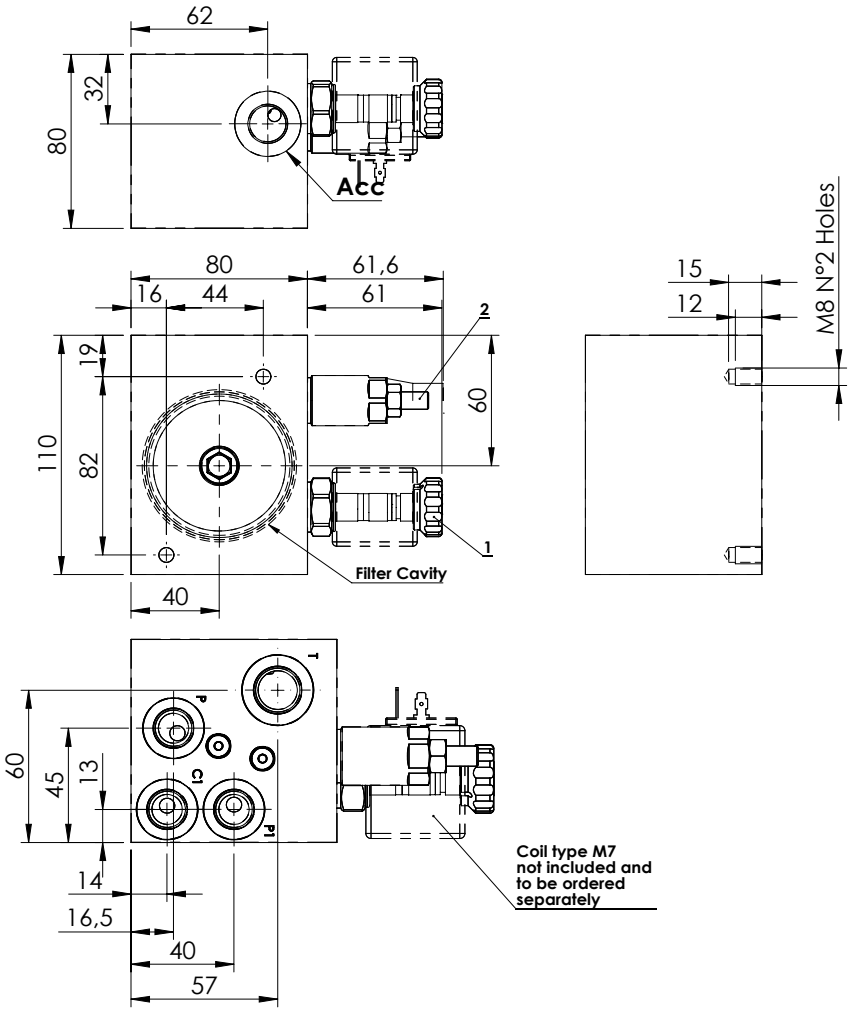

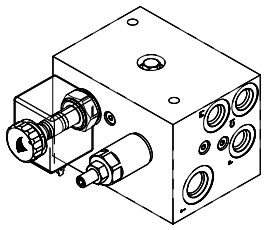

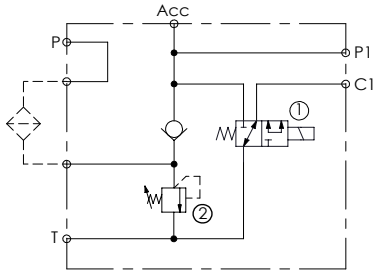

SPECIFICATIONS

Max. operating pressure:	**100 bar**
Rated flow:	**25 l/min**
Manifold:	**Aluminium**
Weight:	**1,1 kg**

SEALING CAP

Ordering code:

AT000020

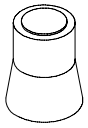

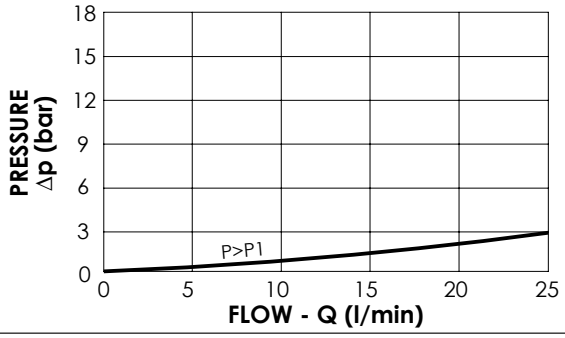

NOTES

-For filter cavity information or special version ask AFT sales network.

-See chapter 18.00.000 for coil.

ORDERING CODES

Quick code	Description	Main ports size	Standard setting (bar, Q=5 l/min)	Adjust. range (bar)	Pressure increase (bar/turn)
BP000108	**BPNN-025-LLEU-NP-J38-N100**	C1,P1,P:**1/4" JIS** T:**3/8" JIS**	**25**	**10-50**	**10**

SPECIAL VALVES - END OF STROKE VALVES

ATLANTIC Fluid Tech

Hydraulic scheme	Valve description	Valve type	Rated flow (l/min)	Max. pressure (bar)	Installation	Main port size or cavity type	Page
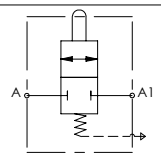	MDTC-060-ABNR	End of stroke, normally open, compensated	60	350	In line	G 3/8"	14.05.**010**
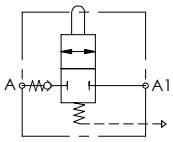	MDTC-100-AVNR	End of stroke, normally closed	100	350	In line	G 1/2"	14.05.**020**
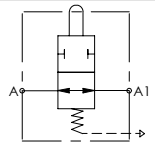	MDTA-060-ABNR	End of stroke, normally open, compensated	60	350	In line	G 3/8"	14.05.**030**
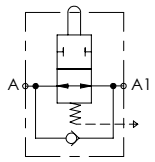	MDTA-100-AVNR	End of stroke, normally open, compensated	100	350	In line	G 1/2"	14.05.**040**
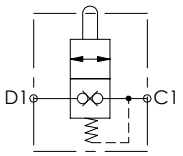	MDTC-030-ABNR	End of stroke, normally closed	30	350	In line	G 3/8"	14.05.**050**
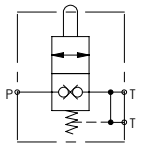	MDTC-080-ABNR	End of stroke, normally closed	80	350	In line	G 3/8"	14.07.**060**

END OF STROKE VALVE

MDTC-060-ABNR

NORMALLY CLOSED COMPENSATED

ATLANTIC Fluid Tech

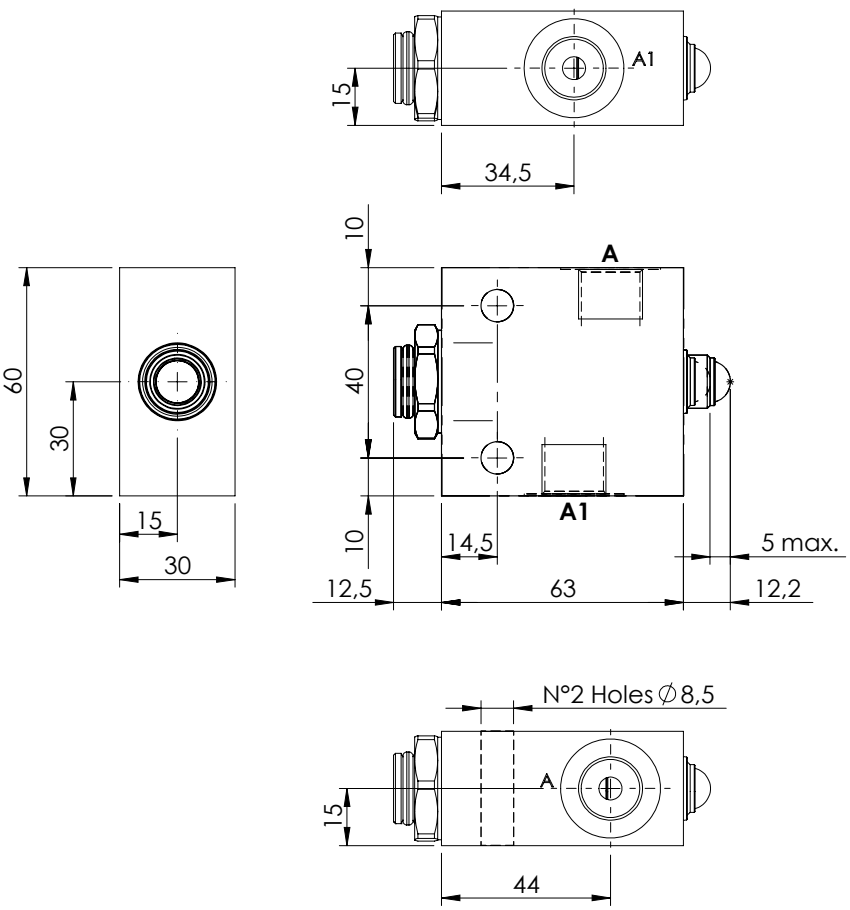

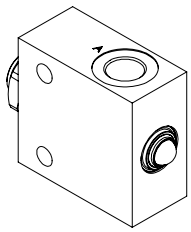

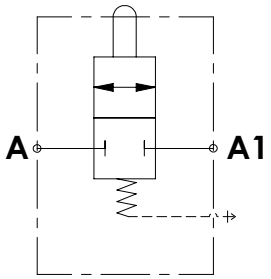

SPECIFICATIONS

Max. operating pressure:	350 bar
Rated flow:	60 l/min
Manifold:	Steel
Weight:	0,82 kg
Maximum stroke:	5 mm
Max. leakage at 150 bar when fully closed:	200 cc/min

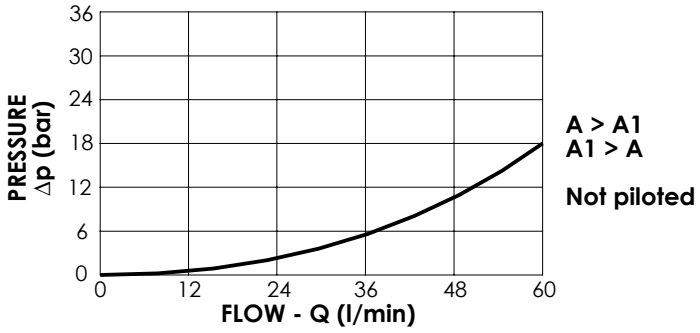

ORDERING CODES

Quick code	Description	Main ports size	Cracking pressure (Kg)	Fully open (Kg)
MD000090	MDTC-060-ABNR-NP-G38-N350	G 3/8"	4	13

END OF STROKE VALVE

MDTC-100-AVNR

NORMALLY CLOSED AIR VENTED

ATLANTIC Fluid Tech

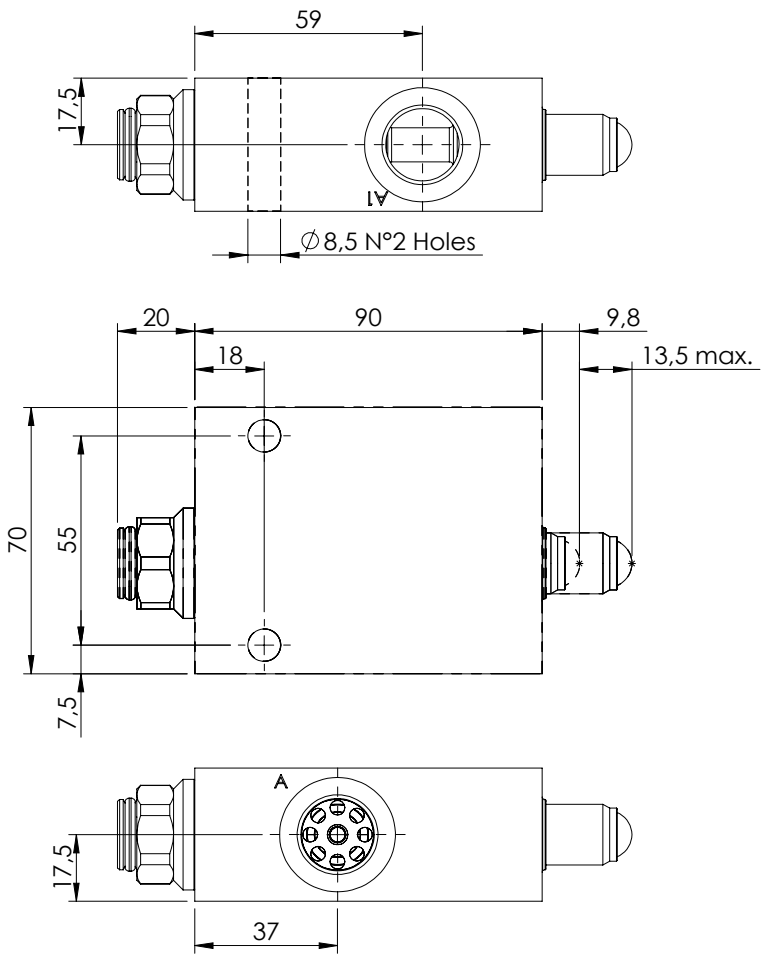

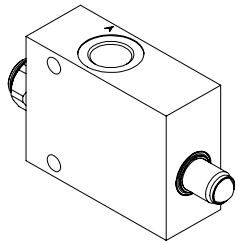

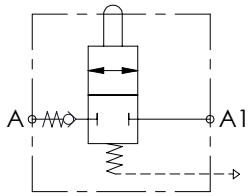

SPECIFICATIONS

Max. operating pressure:	350 bar
Rated flow:	100 l/min
Manifold:	Steel
Weight:	1,59 kg
Maximum stroke:	13,5 mm

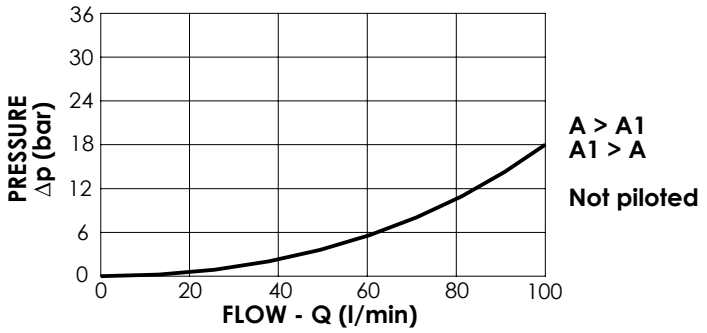

ORDERING CODES

Quick code	Description	Main ports size	Cracking pressure (Kg)	Fully open (Kg)
MD000091	MDTC-100-AVNR-NP-G12-N350	G 1/2"	5,3	14

END OF STROKE VALVE

MDTA-060-ABNR

NORMALLY OPEN COMPENSATED

ATLANTIC Fluid Tech

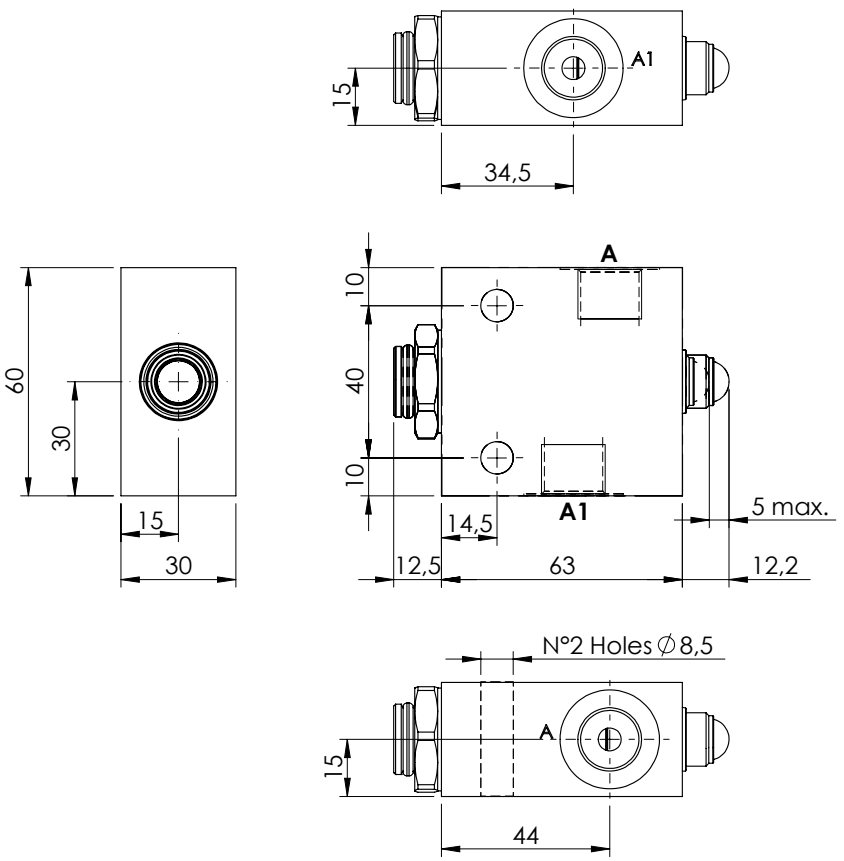

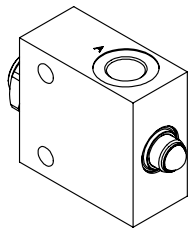

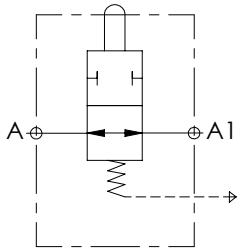

SPECIFICATIONS

Max. operating pressure:	350 bar
Rated flow:	60 l/min
Manifold:	Steel
Weight:	0,82 kg
Maximum stroke:	5 mm
Max. leakage at 150 bar when fully closed:	200 cc/min

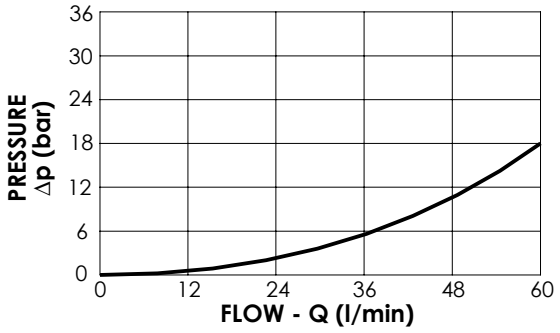

A > A1
A1 > A

Not piloted

ORDERING CODES

Quick code	Description	Main ports size	Cracking pressure (Kg)	Fully closed (Kg)
MD000043	MDTA-060-ABNR-NP-G38-N350	G 3/8"	4	13

END OF STROKE VALVE

MDTA-100-AVNR

NORMALLY OPEN
AIR VENTED

ATLANTIC Fluid Tech

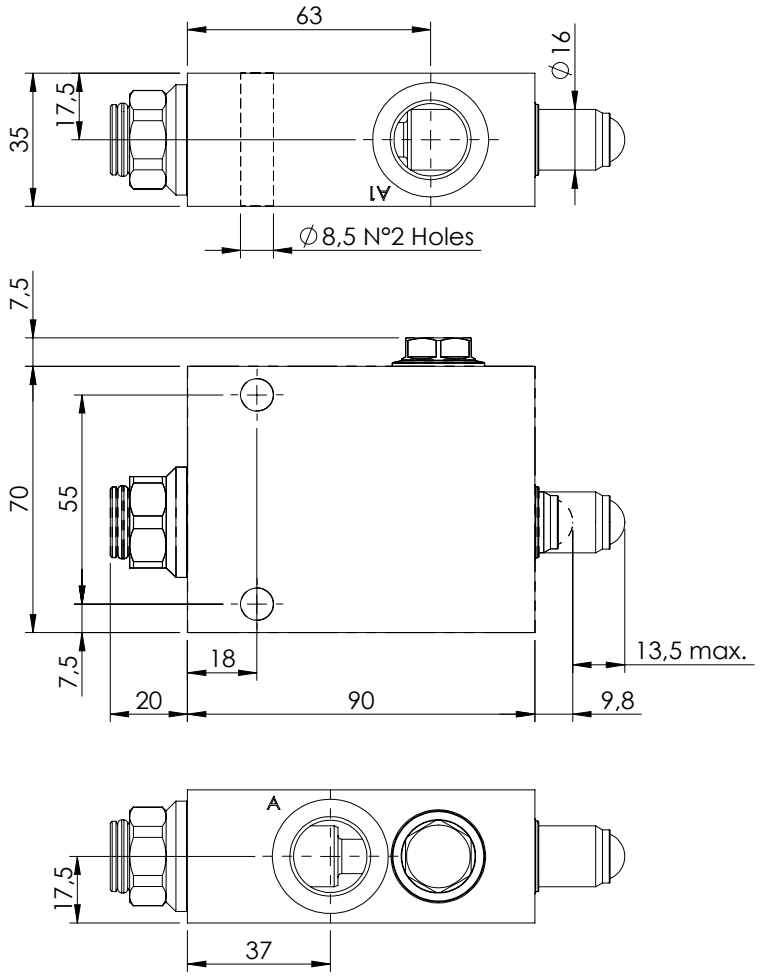

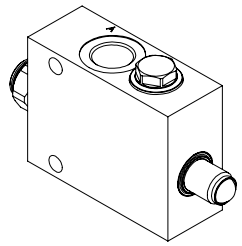

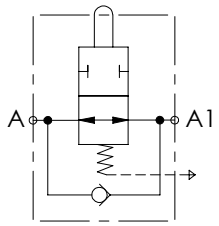

SPECIFICATIONS

Max. operating pressure:	**350 bar**
Rated flow:	**100 l/min**
Manifold:	**Steel**
Weight:	**1,54 kg**
Maximum stroke:	**13,5 mm**

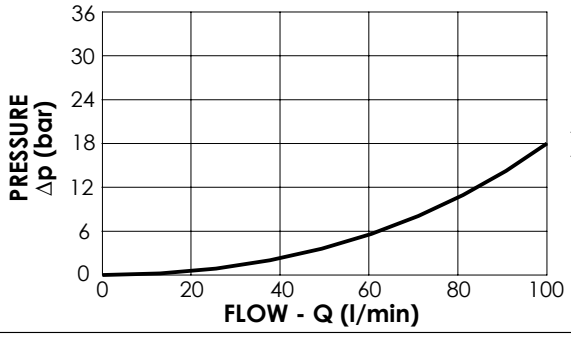

A > A1
A1 > A

Not piloted

ORDERING CODES

Quick code	Description	Main ports size	Cracking pressure (Kg)	Fully closed (Kg)
MD000032	**MDTA-100-AVNR-NP-G12-N350**	**G 1/2"**	**5,3**	**14**

END OF STROKE VALVE

MDTC-030-ABNR

NORMALLY CLOSED

ATLANTIC Fluid Tech

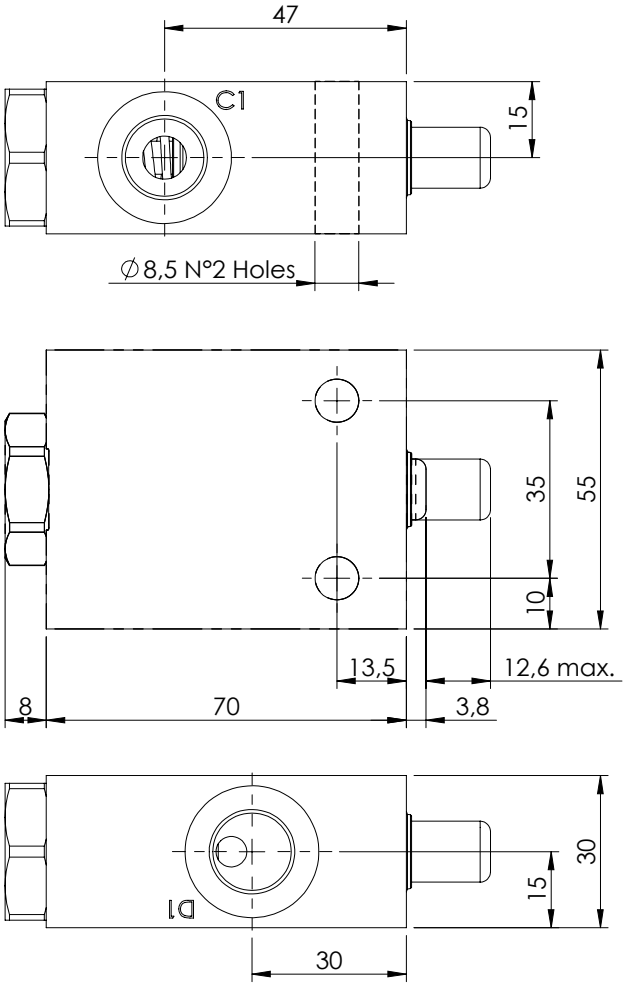

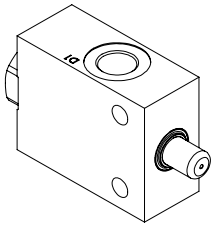

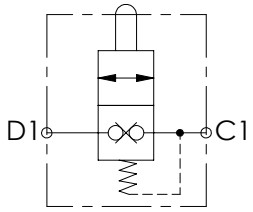

SPECIFICATIONS

Max. operating pressure:	**350 bar**
Rated flow:	**30 l/min**
Manifold:	**Steel**
Weight:	**0,78 kg**
Maximum stroke:	**12,6 mm**

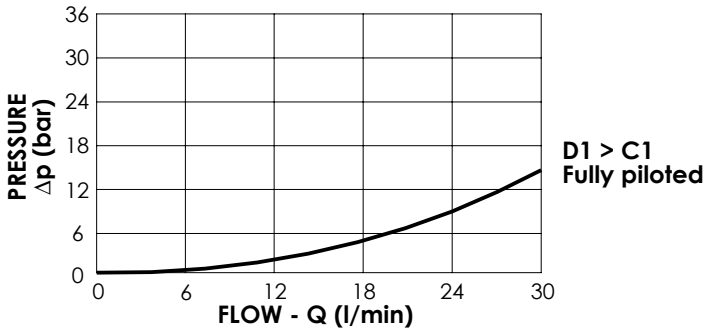

ORDERING CODES

Quick code	Description	Main ports size	Cracking pressure (Kg)	Fully open (Kg)
MD000064	**MDTC-030-ABNR-NP-G38-N350**	**G 3/8"**	**9**	**19,7**

END OF STROKE VALVE

MDTC-080-ABNR

NORMALLY CLOSED

ATLANTIC Fluid Tech

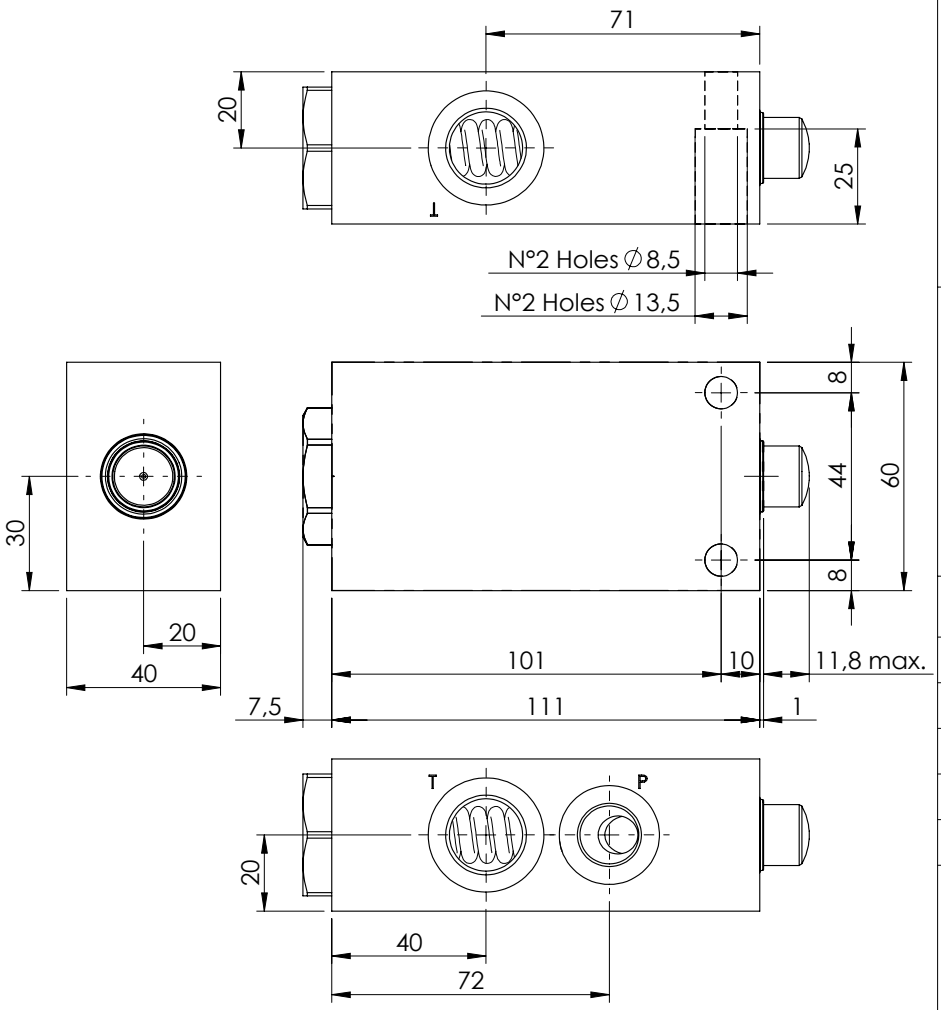

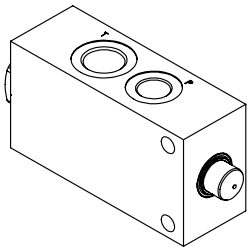

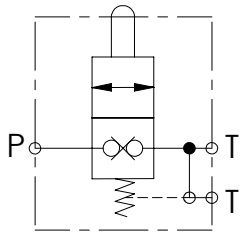

SPECIFICATIONS

Max. operating pressure:	**350 bar**
Rated flow:	**80 l/min**
Manifold:	**Steel**
Weight:	**1,71 kg**
Maximum stroke:	**11,8 mm**

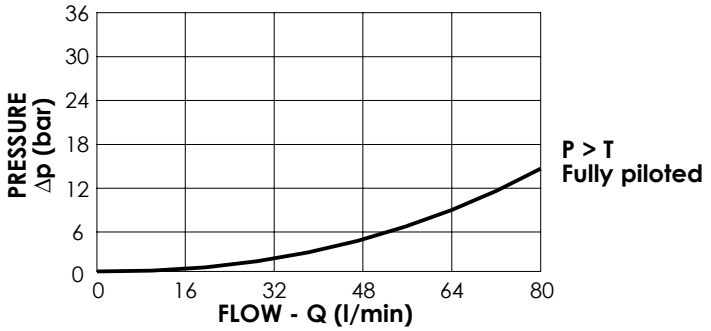

ORDERING CODES

Quick code	Description	Main ports size	Cracking pressure (Kg)	Fully open (Kg)
MD000044	**MDTC-080-ABNR-NP-G38-N350**	P: **G 3/8"** T: **G 1/2"**	**36**	**119**

SPECIAL VALVES - PILOT BLOCKS

ATLANTIC Fluid Tech

Hydraulic scheme	Valve description	Valve type	Rated flow (l/min)	Max. pressure (bar)	Installation	Main port size or cavity type	Page
	MDRD-020-SLN	ISO-SAE, Changeover valve	15	210/350	In line	G 1/2"	14.06.**010**
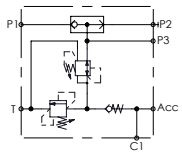	BPRD-010-ALLS	Pilot manifold	10	350	In line	G 1/4"	14.06.**020**
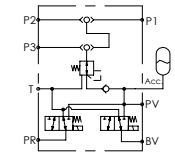	BNNR-015-AER	Pilot manifold	20	50	In line	G 1/4"	14.06.**030**
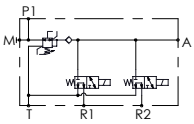	BNND-010-LRE	Joystick safety stop	10	210	In line	G 3/8"	14.06.**040**
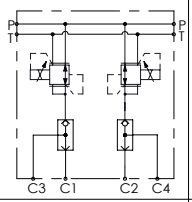	BNND-003-LNQ-02	Proportional pressure reducing, pilot manifold	3	50	In line	G 1/4"	14.06.**050**
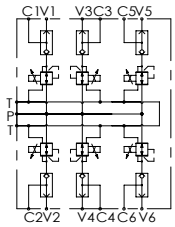	BNND-003-LNQ-06	Proportional pressure reducing, pilot manifold	3	50	In line	G 1/4"	14.06.**060**
	BNND-003-LNQ-08	Proportional pressure reducing, pilot manifold	3	50	In line	G 1/4"	14.06.**070**
	BNND-003-LNQ-14	Proportional pressure reducing, pilot manifold	3	50	In line	G 1/4"	14.06.**080**

PILOT BLOCK

MDRD-020-SLN

ISO-SAE CHANGEOVER VALVE

ATLANTIC Fluid Tech

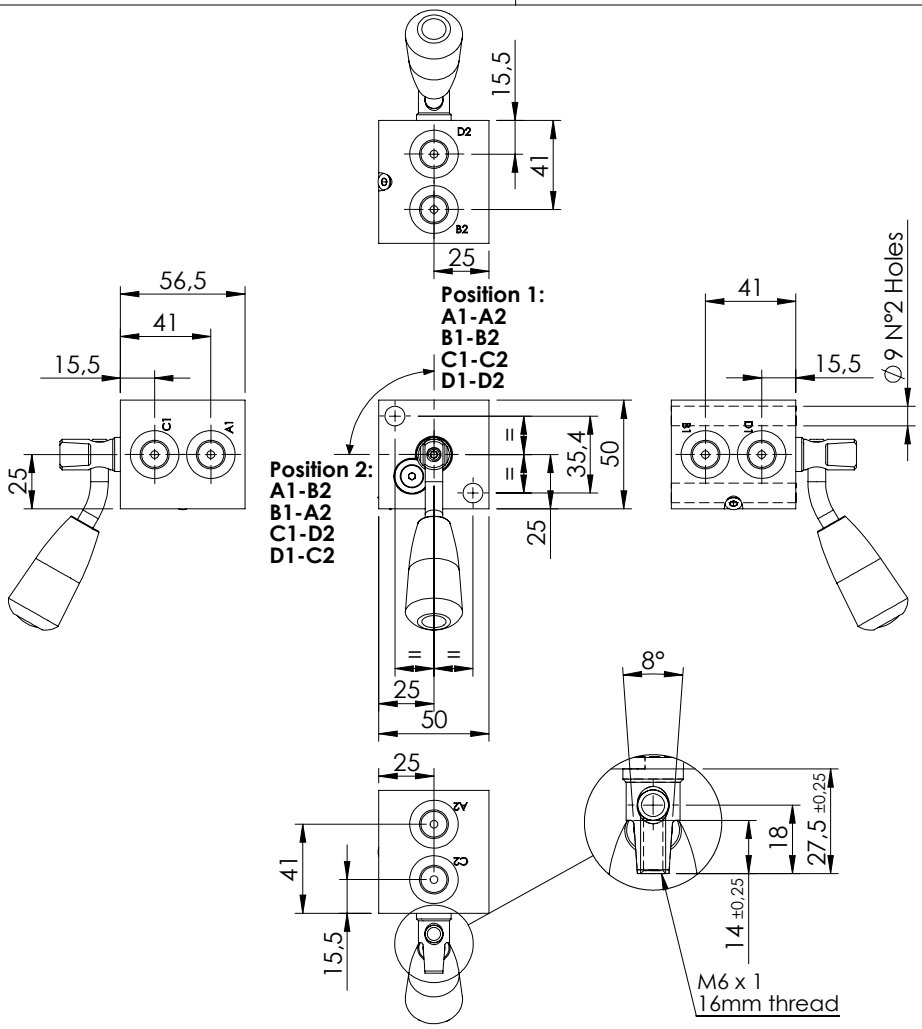

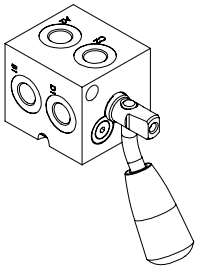

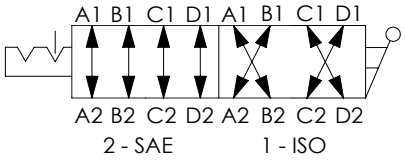

SPECIFICATIONS

Max. operating pressure:	**50 bar**
Rated flow:	**20 l/min**
Body:	**Steel**
Weight:	**1 kg**
Position shown:	**1 - ISO position**

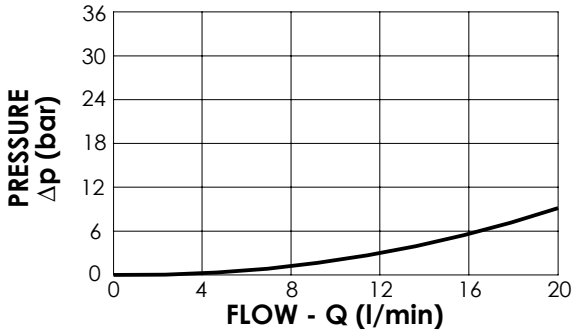

ORDERING CODES

Quick code	Description	Ports size	
MD000071	**MDRD-020-SLN-NP-G14-N350**	**G 1/4"**	

PILOT BLOCK

BPRD-010-ALLS

ATLANTIC Fluid Tech

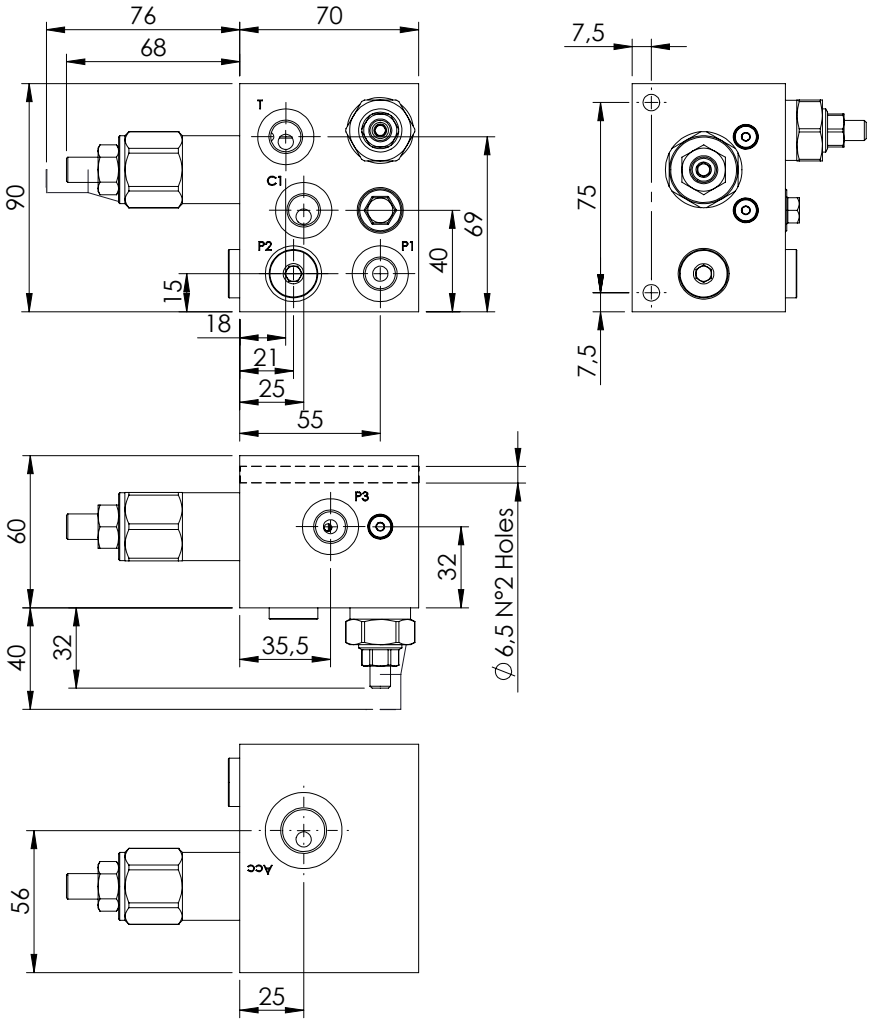

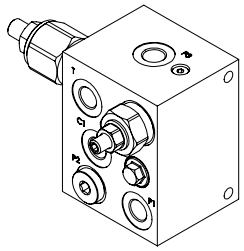

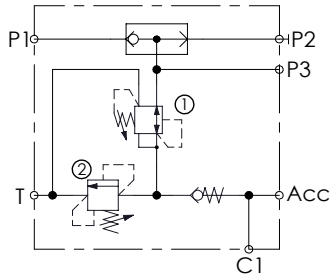

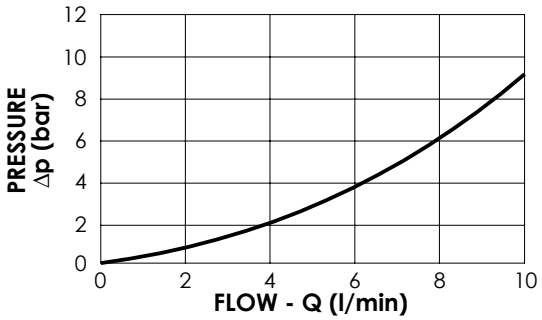

SPECIFICATIONS

Max. operating pressure:	**350 bar**
Rated flow:	**10 l/min**
Weight:	**3 kg**
Coil type:	**Steel**

SEALING CAP

Ordering codes:

AT000021 (Valve n°1) 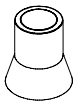	**AT000020** (Valve n°2) 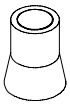

NOTE

ORDERING CODES

Quick code	Description	Port size	Standard setting (bar)	Adjust. range (bar)	Pressure increase (bar/turn)
BP000113	**BPRD-010-ALLS-NP-G14-N350**	P1,P2,P3,C1,T: **G 1/4"** Acc: **M18x1,5**	**①35 bar** **②50 bar @ 5 l/min**	**①10 - 50** **②10 - 70**	**① 7** **② 26**

PILOT BLOCK

BNND-015-AER

PILOT MANIFOLD

ATLANTIC Fluid Tech

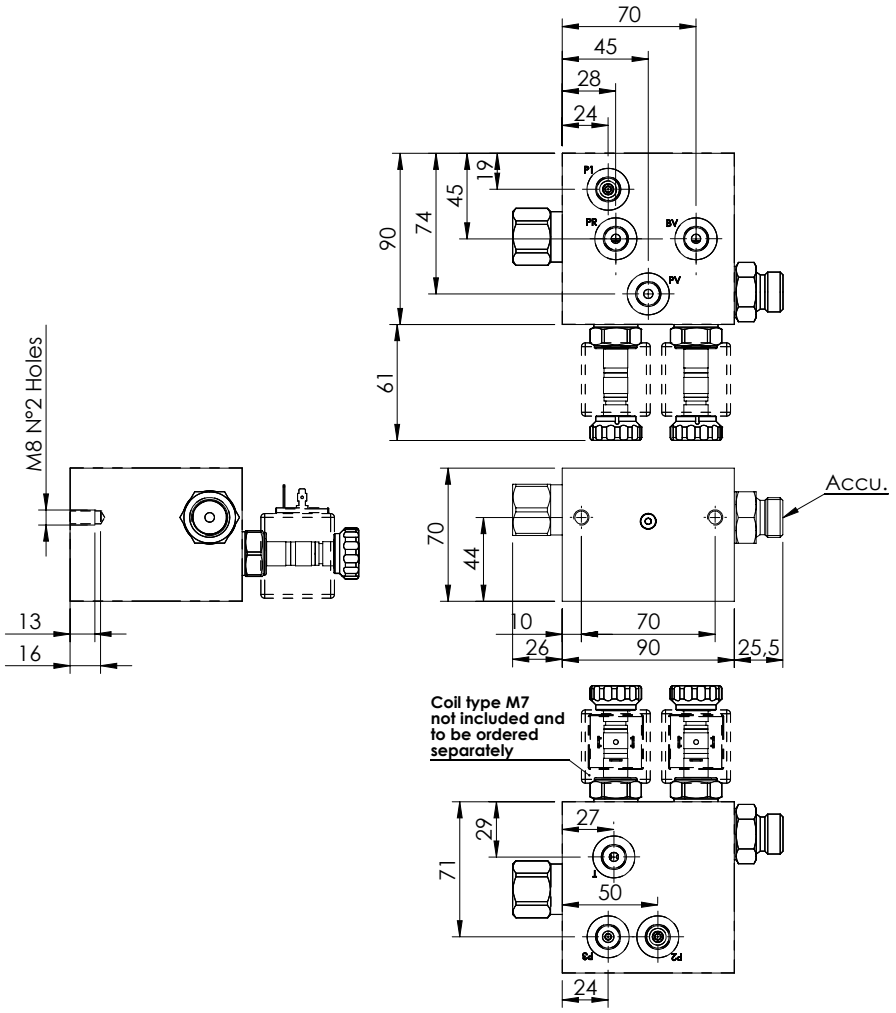

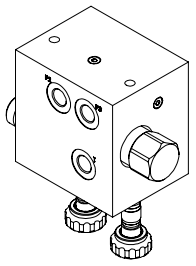

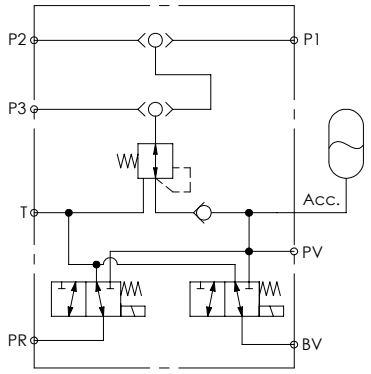

SPECIFICATIONS

Max. operating pressure:	350/210 bar
Rated flow:	15 l/min
Weight: Steel 4,5 kg; Aluminium 1,9 kg	
Coil type:	M7

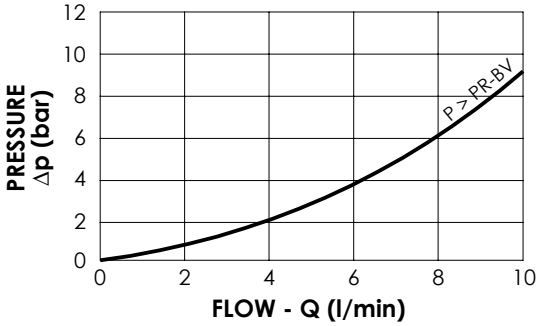

NOTES

Rated flow in inlet: 15 l/min
Rated flow from accumulator: 45 l/min

Pressure reducing valve with stabilization system

Othercoil/voltage available on request

See chapter 18.00.000 for coil.

ORDERING CODES

Quick code	Description	Port size	Manifold material	Standard setting (bar)	
BD000205	BNND-015-AER-G14-N350	P1, P2, P3, PR, PV,BV, T: **G 1/4"** Acc: **G 1/2"**	Steel	35	
BD000087	BNND-015-LER-G14-N210	P1, P2, P3, PR, PV,BV, T: **G 1/4"** Acc: **G 1/2"**	Aluminium	35	

PILOT BLOCK

BNND-010-LRE

JOYSTICK SAFETY STOP SOLENOID OPERATED

ATLANTIC Fluid Tech

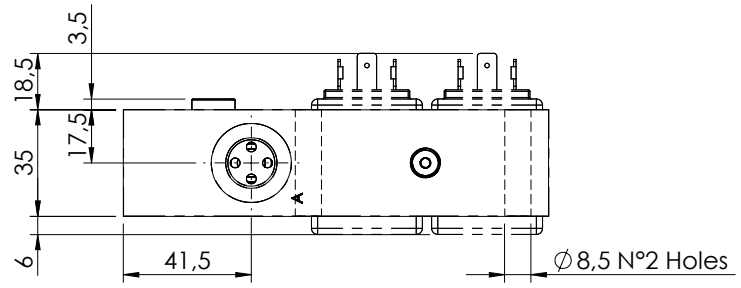

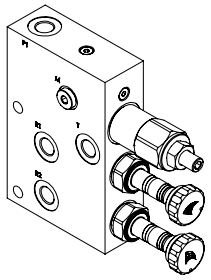

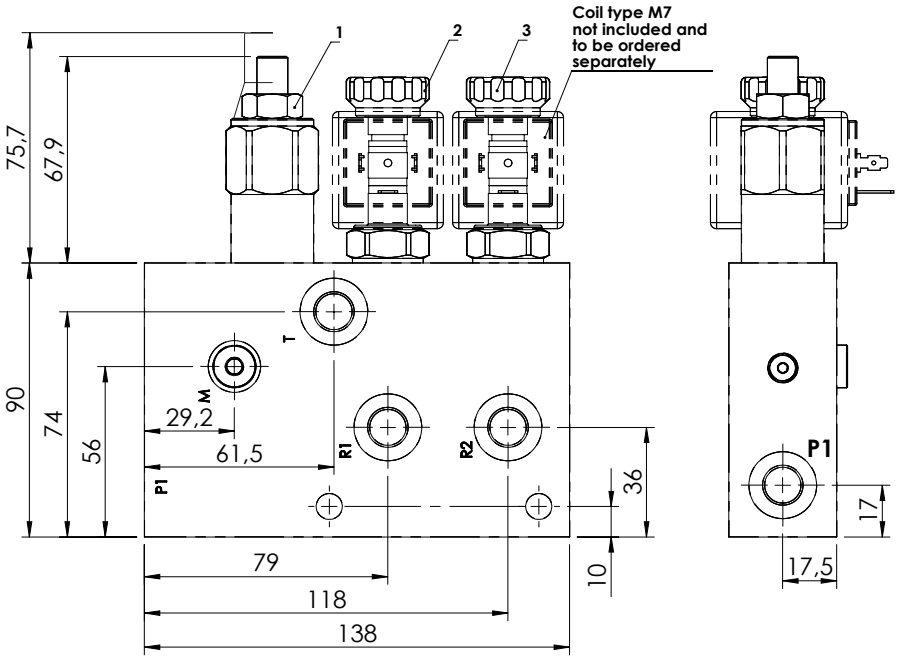

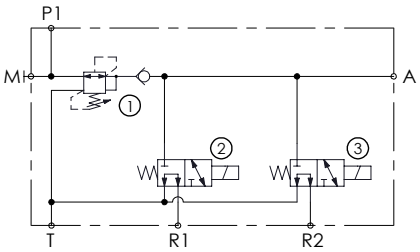

SPECIFICATIONS

Max. operating pressure:	210 bar
Rated flow:	10 l/min
Manifold:	Steel
Weight:	3,2 kg
Coil type:	M7

SEALING CAP

Ordering code:
AT000021

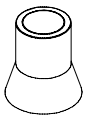

NOTES

-See chapter 18.00.000 for coil.

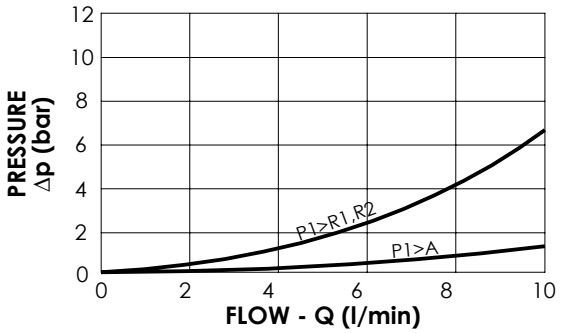

ORDERING CODES

Quick code	Description	Main ports size	Standard setting (bar)	Adjustm. range (bar)	Pressure increase (bar/turn)
BD000197	**BNND-010-LRE-NP-G38-N210**	R1,R2,T,P1: **G1/4"** A: **G3/8"** M: **G1/8"**	**35**	**10-50**	**7**

PILOT BLOCK

BNND-003-LNQ

PROPORTIONAL PRESSURE REDUCING PILOT MANIFOLD

ATLANTIC Fluid Tech

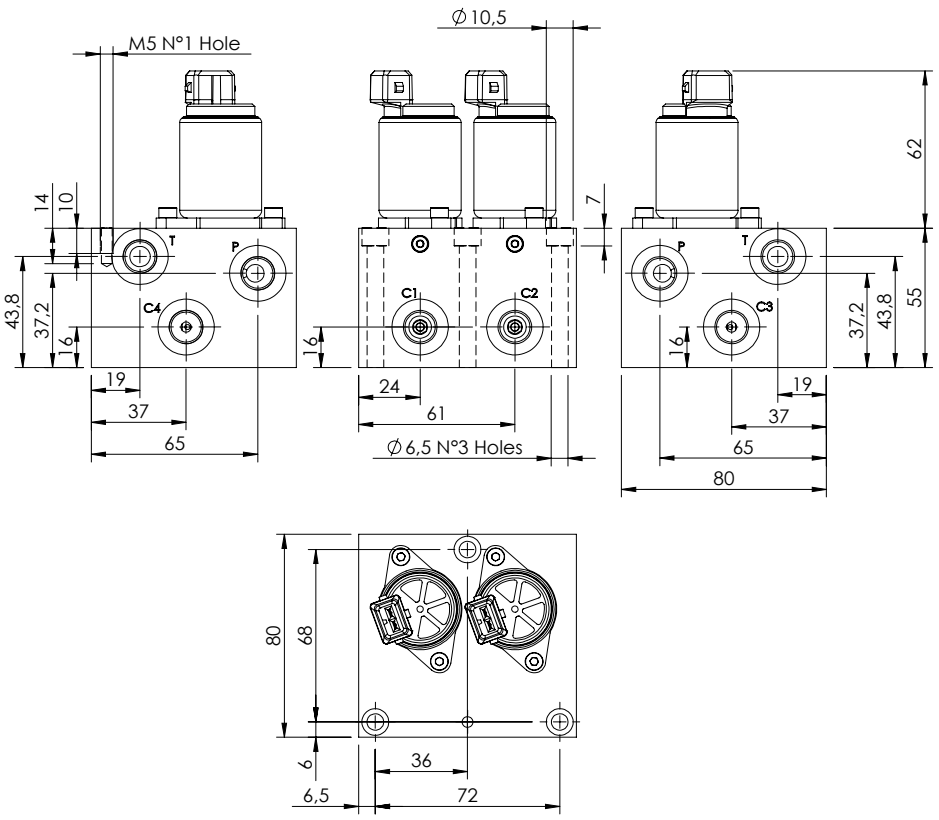

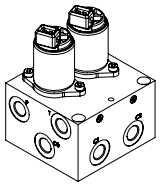

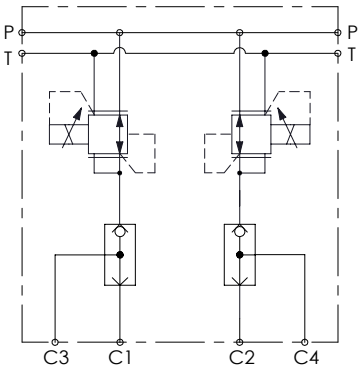

SPECIFICATIONS

Max. operating pressure:	50 bar
Rated flow:	3 l/min
Manifold:	Aluminium
Weight:	0,9 kg

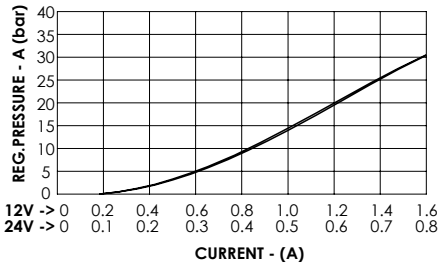

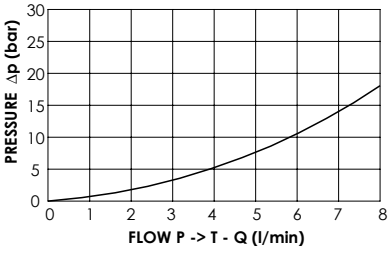

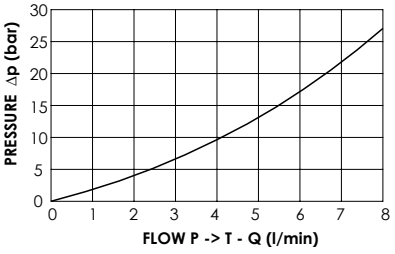

ORDERING CODES

Quick code	Description	Main ports size	Regulated pressure range (bar)	Voltage (V)	Connector type
BD000142	BNND-003-LNQ-02-G14-NBAJ	G 1/4"	0-25	24 DC	AMP JUNIOR
BD000127	BNND-003-LNQ-02-G14-NAAJ	G 1/4"	0-25	12 DC	AMP JUNIOR

PILOT BLOCK

BNND-003-LNQ

PROPORTIONAL PRESSURE REDUCING PILOT MANIFOLD

ATLANTIC Fluid Tech

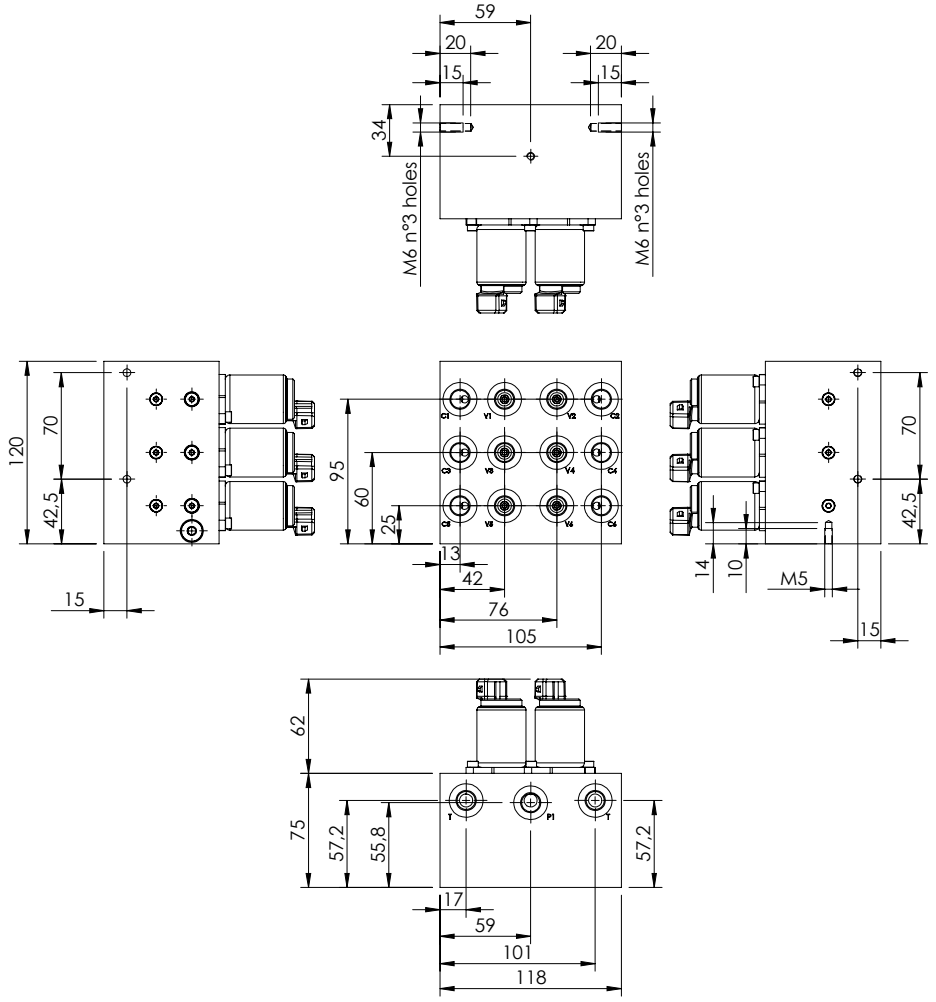

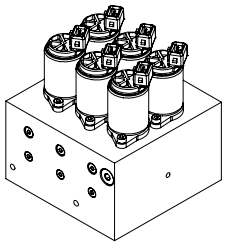

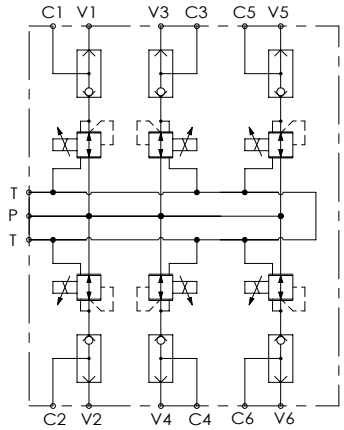

SPECIFICATIONS

Max. operating pressure:	50 bar
Rated flow:	3 l/min
Manifold:	Aluminium
Weight:	2,6 kg

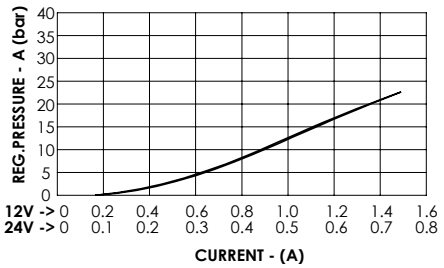

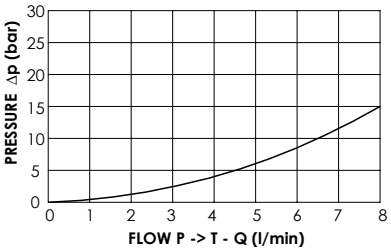

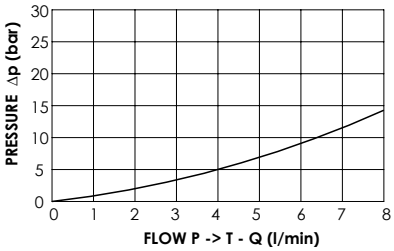

ORDERING CODES

Quick code	Description	Main ports size	Regulated pressure range (bar)	Voltage (V)	Connector type
BD000084	BNND-003-LNQ-06-G14-NBAJ	G 1/4"	0-20	24 DC	AMP JUNIOR
BD000202	BNND-003-LNQ-06-G14-NAAJ	G 1/4"	0-20	12 DC	AMP JUNIOR

PILOT BLOCK

BNND-003-LNQ

PROPORTIONAL PRESSURE REDUCING PILOT MANIFOLD

ATLANTIC Fluid Tech

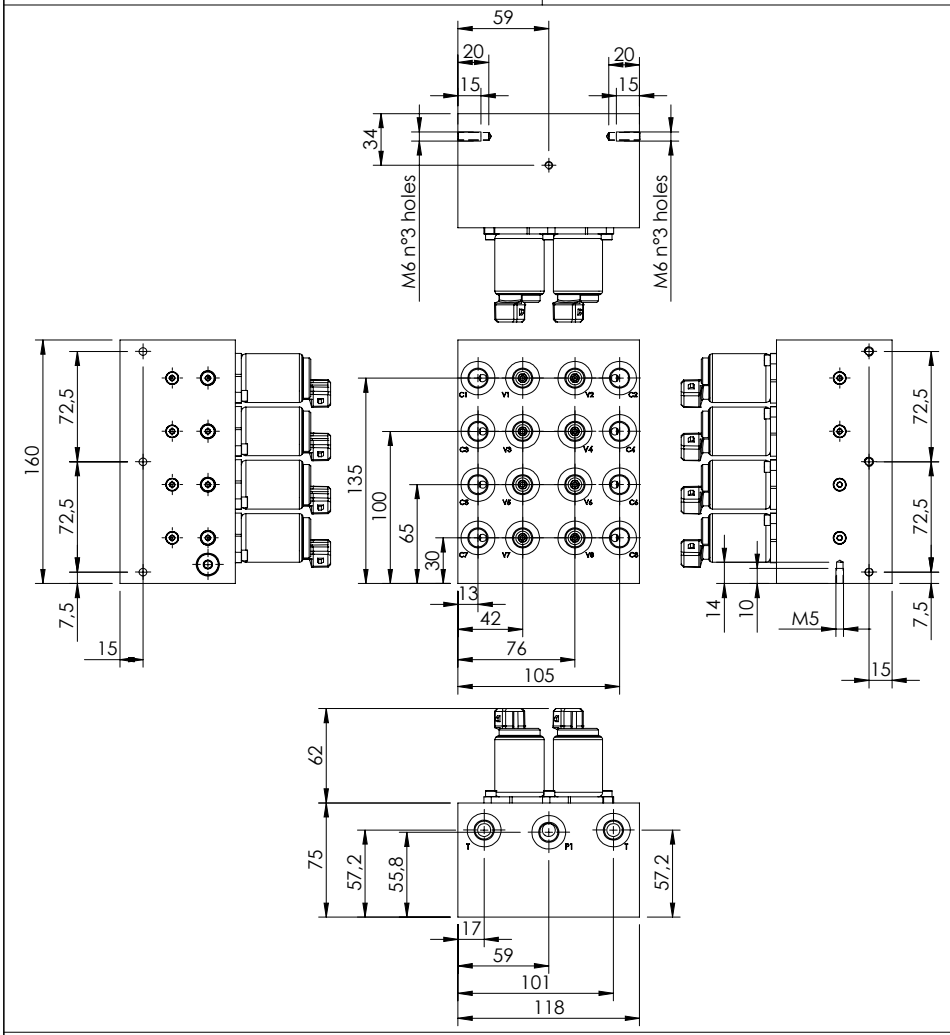

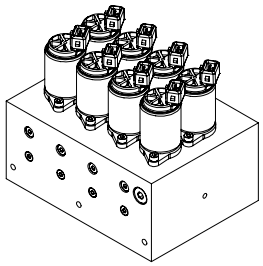

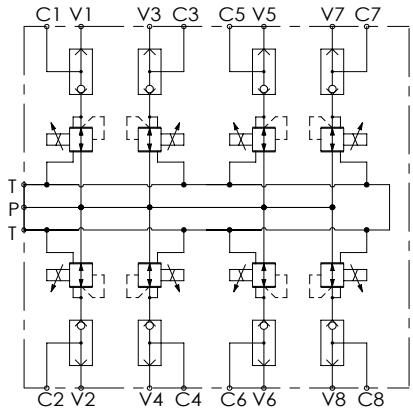

SPECIFICATIONS

Max. operating pressure:	**50 bar**
Rated flow:	**3 l/min**
Manifold:	**Aluminium**
Weight:	**3,6 kg**

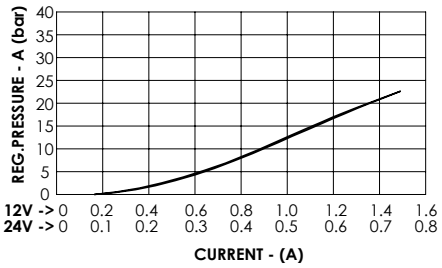

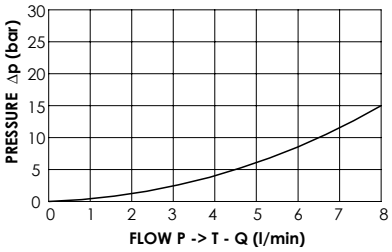

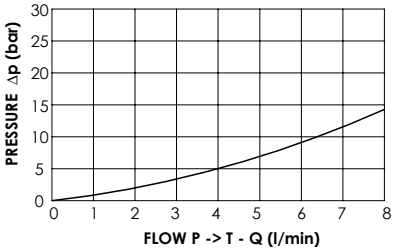

ORDERING CODES

Quick code	Description	Main ports size	Regulated pressure range (bar)	Voltage (V)	Connector type
BD000088	**BNND-003-LNQ-08-G14-NBAJ**	**G 1/4"**	**0-20**	**24 DC**	**AMP JUNIOR**
BD000201	**BNND-003-LNQ-08-G14-NAAJ**	**G 1/4"**	**0-20**	**12 DC**	**AMP JUNIOR**

PILOT BLOCK

BDEZ-005-LLSN

PROPORTIONAL PRESSURE REDUCING PILOT MANIFOLD

ATLANTIC Fluid Tech

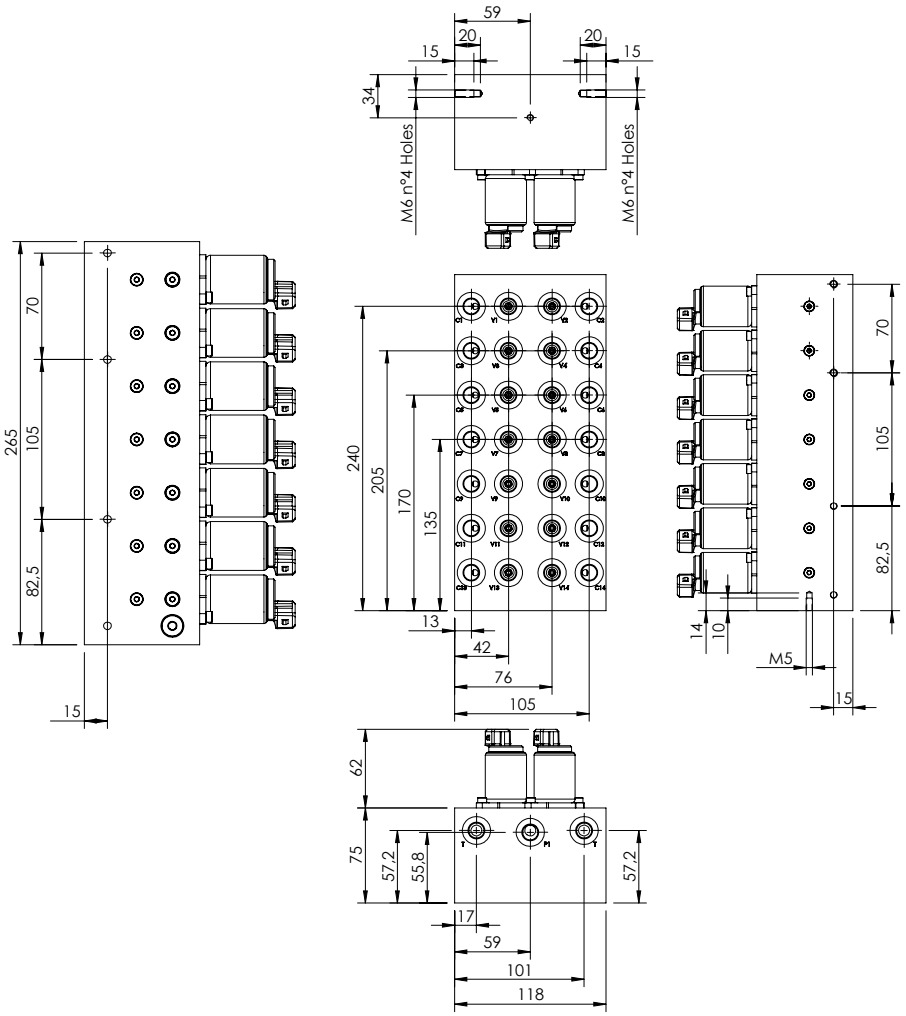

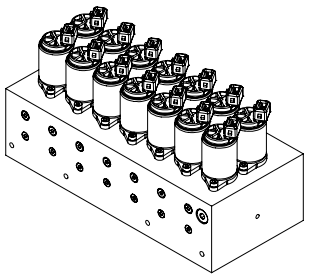

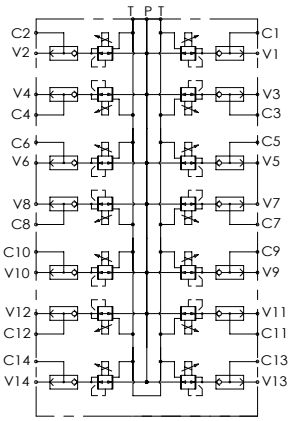

SPECIFICATIONS

Max. operating pressure:	**50 bar**
Rated flow:	**3 l/min**
Manifold:	**Aluminium**
Weight:	**5,8 kg**

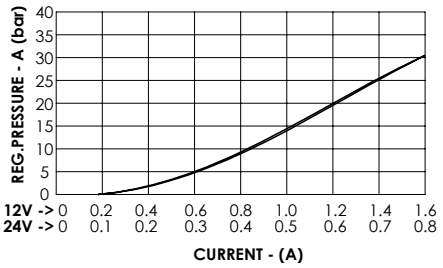

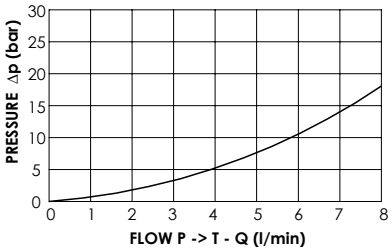

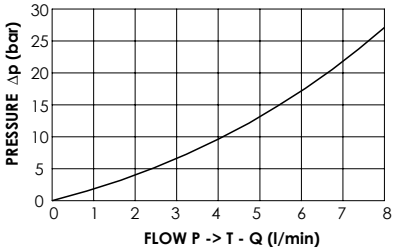

ORDERING CODES

Quick code	Description	Main ports size	Regulated pressure range (bar)	Voltage (V)	Connector type
BD000203	**BDEZ-005-LLSN-14-G14-N050-NBAJ**	**G 1/4"**	**0-25**	**24 DC**	**AMP JUNIOR**
BD000204	**BDEZ-005-LLSN-14-G14-N050-NAAJ**	**G 1/4"**	**0-25**	**12 DC**	**AMP JUNIOR**

SPECIAL VALVES - AUTOMATIC SWITCHING VALVES

ATLANTIC Fluid Tech

Hydraulic scheme	Valve description	Valve type	Rated flow (l/min)	Max. pressure (bar)	Installation	Main port size or cavity type	Page
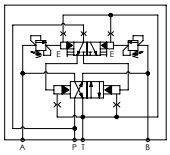	MDAP-040-NNNR	Spool type, pressure switching	40	350	Flanged	Cetop 3	14.07.**010**
	MDAP-090-NNNR	Spool type, pressure switching	90	350	Flanged	Cetop 5	14.07.**020**
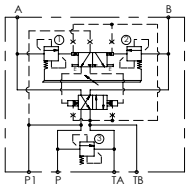	MDAP-090-NNNR	Spool type, pressure switching	90	250	Flanged	Cetop 5	14.07.**030**
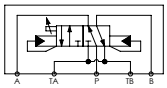	MDAF-080-ANNR	Spool type, flow switching, P in A start	80	350	Flanged	Cetop 5	14.07.**040**

AUTOMATIC DIRECTIONAL VALVE

MDAP-040-NNNR

PRESSURE SWITCHING

ATLANTIC Fluid Tech

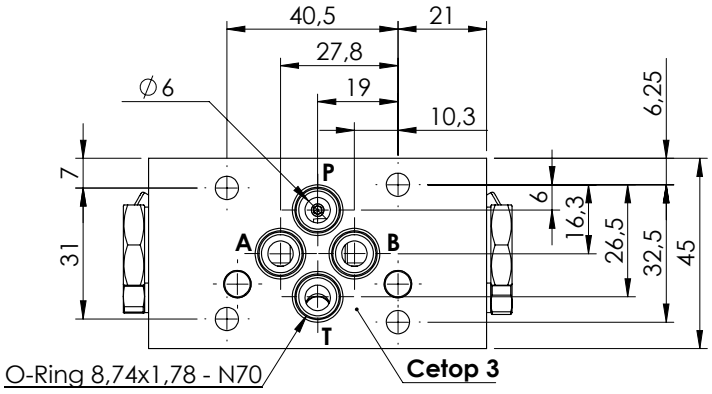

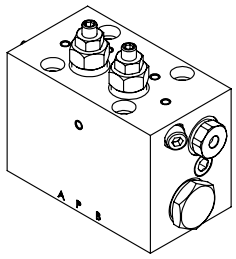

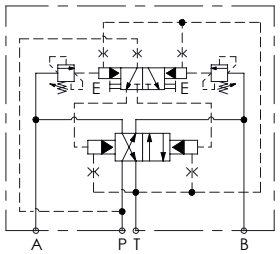

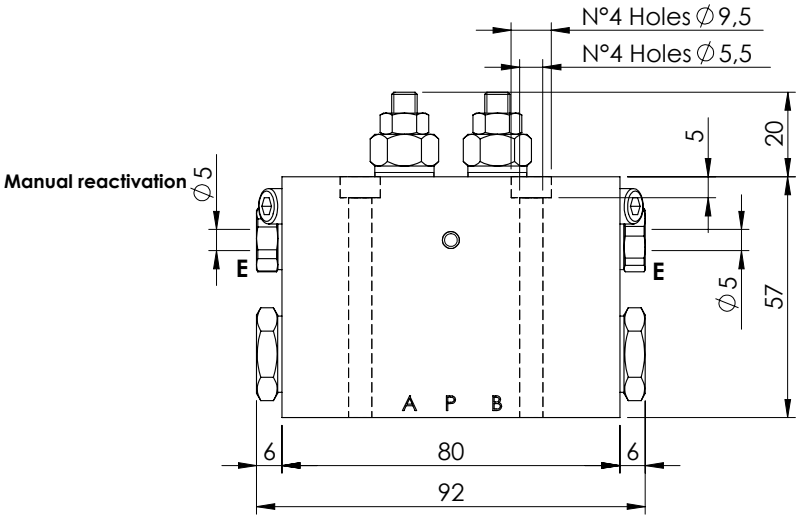

SPECIFICATIONS

Max. operating pressure:	350 bar
Rated flow:	40 l/min
Manifold:	Black galvanized cast iron
Weight:	1,48 kg

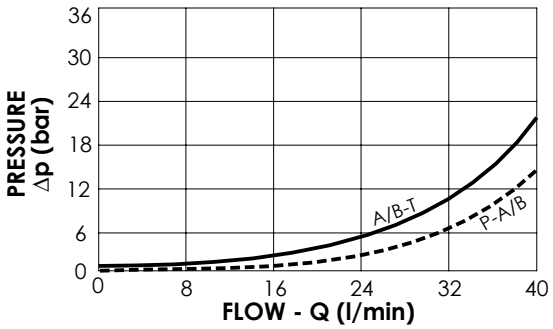

NOTES

Minimum required flow: 3 l/min

Actuator working pressure should always be lower than the automatic switching valve relief setting.

Automatic switching valve relief setting should always be lower than pump relief valve setting.

ORDERING CODES

Quick code	Description	Main ports size	Standard setting (bar, Q=5 l/min)	Adjust. range (bar)	Pressure increase (bar/turn)
MD000027	**MDAP-040-NNNR-NP-N06-N350**	A,B,P,T : **CETOP 3**	**350**	**100-350**	**95**
MD000026	**MDAP-040-NNNR-NP-N06-N200**	A,B,P,T : **CETOP 3**	**200**	**50-210**	**51**
MD000025	**MDAP-040-NNNR-NP-N06-N100**	A,B,P,T : **CETOP 3**	**100**	**15-100**	**26**

AUTOMATIC DIRECTIONAL VALVE

MDAP-090-NNNR

PRESSURE SWITCHING

ATLANTIC Fluid Tech

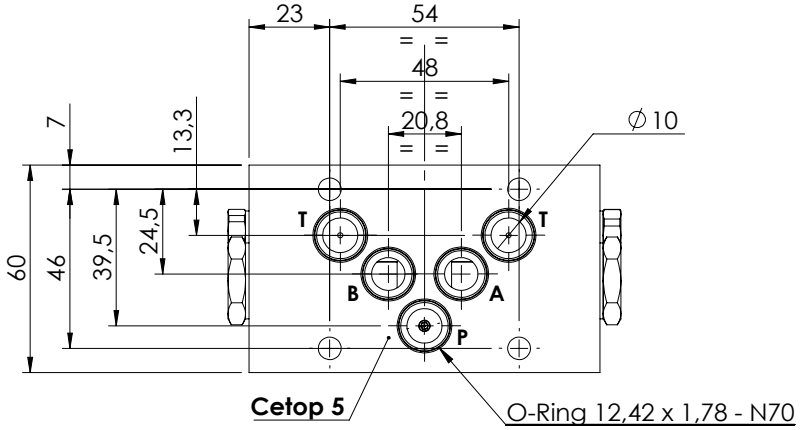

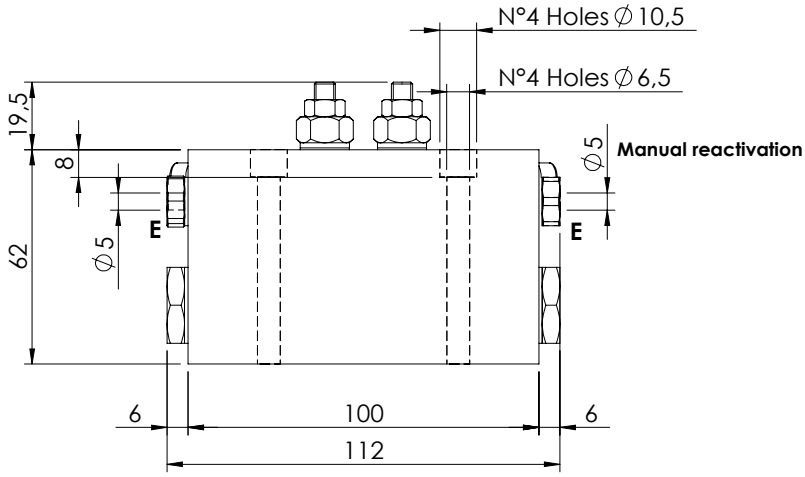

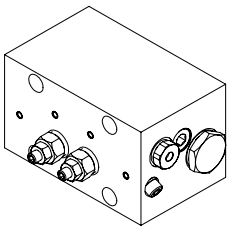

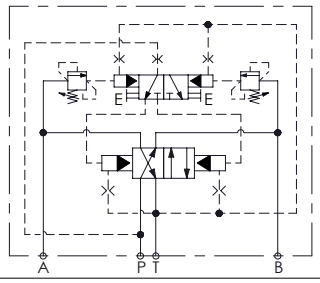

SPECIFICATIONS

Max. operating pressure:	**350 bar**
Rated flow:	**90 l/min**
Manifold:	**Cast iron**
Weight:	**2,64 kg**

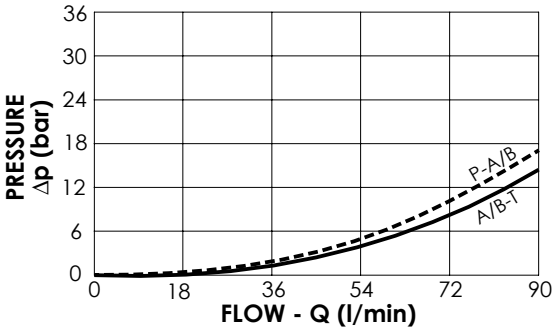

NOTES

Minimum required flow: 3 l/min

ORDERING CODES

Quick code	Description	Main ports size	Standard setting (bar, Q=5 l/min)	Adjust. range (bar)	Pressure increase (bar/turn)
MD000030	**MDAP-090-NNNR-NP-N10-N350**	A,B,P,T: **CETOP 5**	**350**	**100-350**	**95**
MD000029	**MDAP-090-NNNR-NP-N10-N200**	A,B,P,T: **CETOP 5**	**200**	**50-210**	**51**
MD000028	**MDAP-090-NNNR-NP-N10-N100**	A,B,P,T: **CETOP 5**	**100**	**15-100**	**26**

AUTOMATIC DIRECTIONAL VALVE

MDAP-090-NNNR

PRESSURE SWITCHING

ATLANTIC Fluid Tech

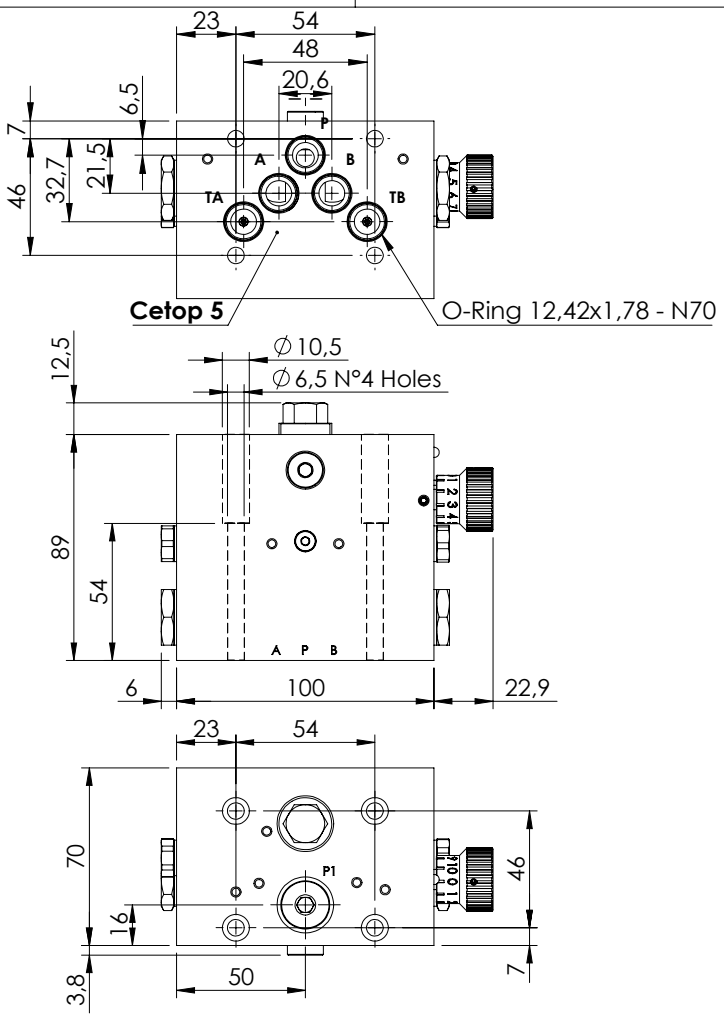

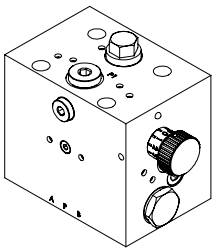

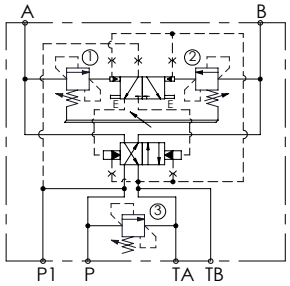

SPECIFICATIONS

Max. operating pressure:	350 bar
Rated flow:	90 l/min
Manifold:	Cast Iron
Weight:	4,45 kg

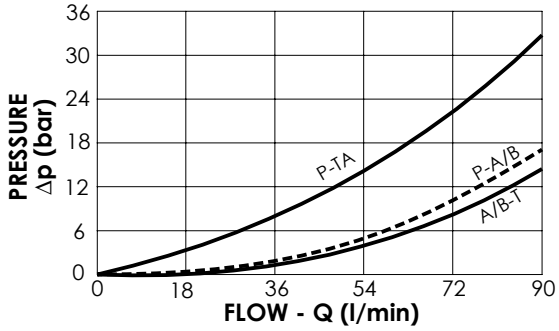

NOTES

Minimum required flow: 3 l/min

ORDERING CODES

Quick code	Description	Main ports size	Standard setting (bar, Q=5 l/min)	Adjust. range (bar)	Pressure increase (bar/turn)
MD000119	MDAP-090-NNNR-NP-N10-N350	A,B,P,TA,TB: **CETOP 5** P1: **G 1/4"**	①②**180** ③**200**	①② **140-350** **Fix setting**	①②**146**

AUTOMATIC DIRECTIONAL VALVE

MDAF-080-ANNR

FLOW SWITCHING

ATLANTIC Fluid Tech

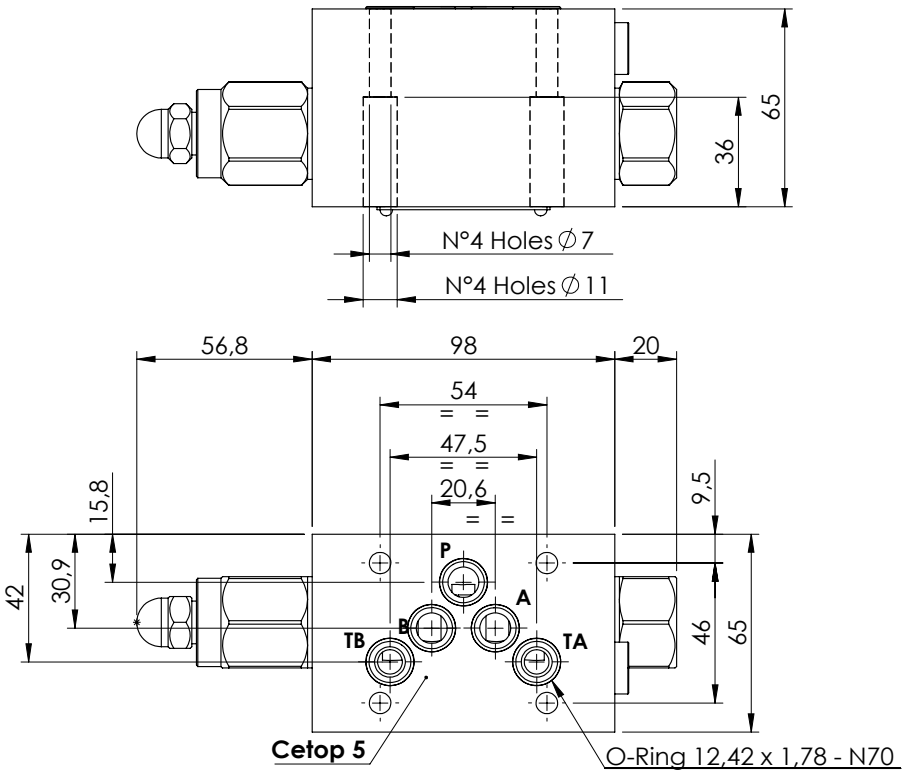

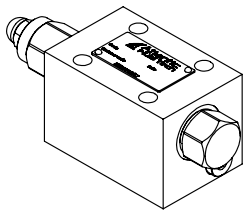

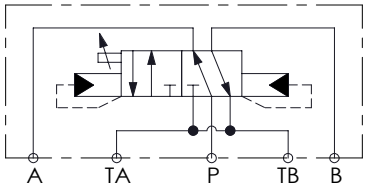

SPECIFICATIONS

Max. operating pressure:	**350 bar**
Rated flow:	**80 l/min**
Manifold:	**Cast iron**
Weight:	**3,12 kg**

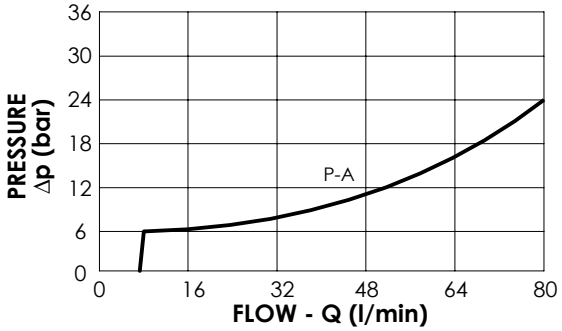

NOTES

Minimum required flow: 6 l/min

Flexible pipe should be placed between valve and cylinder rod side

No suitable motor

ORDERING CODES

Quick code	Description	Main ports size	
MD000034	**MDAF-080-ANNR-NP-N10-N350**	A,P,B,TA,TB : **CETOP 5**	

SPECIAL VALVES - LOAD LIMITING DEVICE VALVES

ATLANTIC Fluid Tech

Hydraulic scheme	Valve description	Valve type	Rated flow (l/min)	Max. pressure (bar)	Installation	Main port size or cavity type	Page
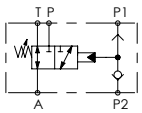	BDMN-010-LLCI	Hydraulic pressure, unloading, 3 ways	10	210	In line	G 1/4"	14.08.**010**
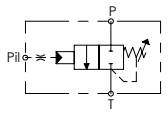	MTTP-003-TLSN	Hydraulic pressure, unloading, 2 ways	3	350	In line	G 1/4"	14.08.**020**
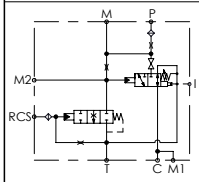	MTSN-120-TLNR	Hydraulic pressure, unloading, kick down system	120	350	In line	G 1/4"	14.08.**030**
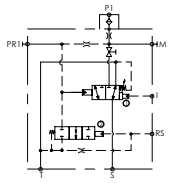	MTTL-005-TLSR	Pilot pressure, unloading	5	350	In line	G 1/4"	14.08.**040**
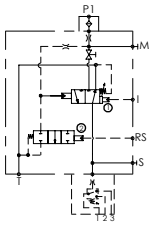	MTTR-005-TLSN	Pilot pressure, unloading, flange for pressure switch	5	350	In line	G 1/4"	14.08.**050**

LOAD LIMITING DEVICE

BDMN-010-LLCS

HYDRAULIC PRESSURE UNLOADING 3 WAYS

ATLANTIC Fluid Tech

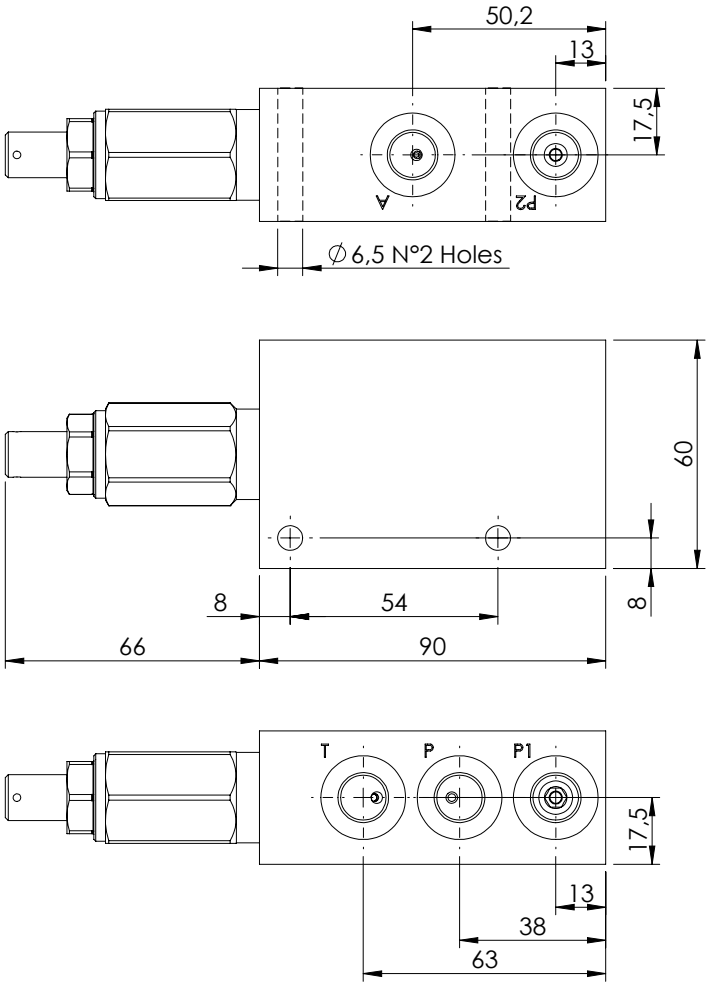

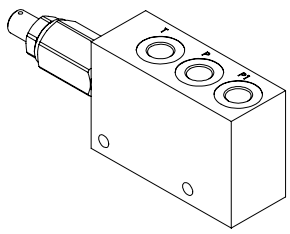

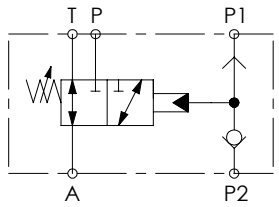

SPECIFICATIONS

Max. operating pressure:	**210 bar**
Rated flow:	**8 l/min**
Manifold:	**Aluminium**
Weight:	**0,7 kg**

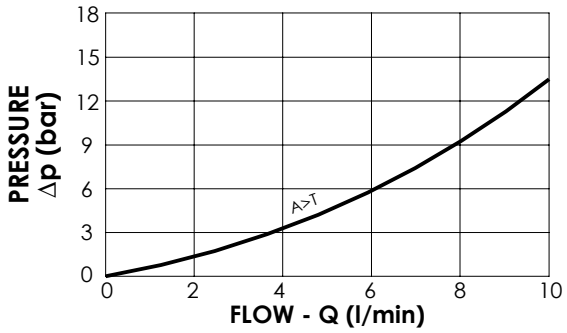

NOTES

ORDERING CODES

Quick code	Description	Main ports size	Standard setting (bar, Cracking Pr.)	Adjust. range (bar)	Pressure increase (bar/turn)
BD000104	**BDMN-010-LLCS-NP-G14-N210**	T,P,P1,A:**G 1/4"**	**5**	**4-40**	**3**

LOAD LIMITING DEVICE

MTTP-003-TLSN

HYDRAULIC PRESSURE UNLOADING 2 WAYS

ATLANTIC Fluid Tech

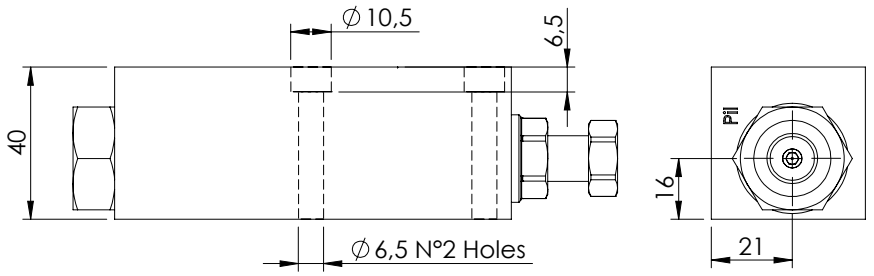

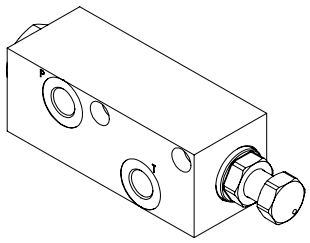

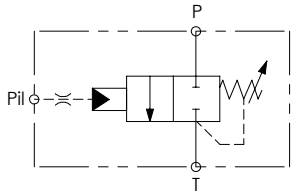

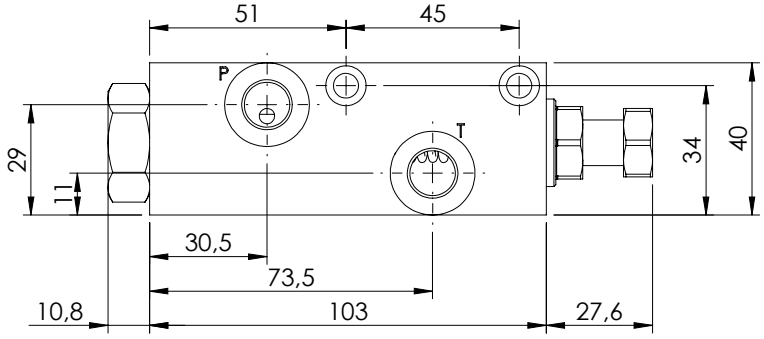

SPECIFICATIONS

Max. operating pressure:	**350 bar**
Rated flow:	**3 l/min**
Manifold:	**Aluminium**
Weight:	**0,55 kg**

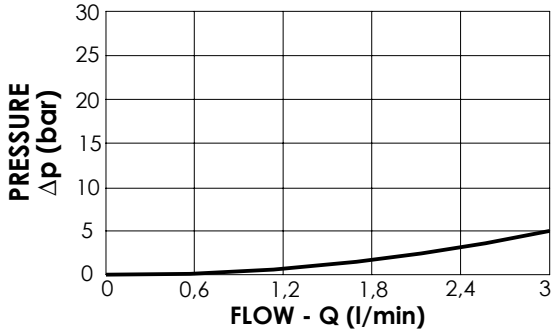

NOTES

ORDERING CODES

Quick code	Description	Main ports size	Standard setting (bar, Q=5 l/min)	Adjust. range (bar)	Pressure increase (bar/turn)
MT000011	**MTTP-003-TLSN-01-G14-N006**	P,Pil,T: **G1/4"**	**6**	**6-55**	**12**

LOAD LIMITING DEVICE

MTSN-120-TLNR

HYDRAULIC PRESSURE UNLOADING KICK DOWN SYSTEM

ATLANTIC Fluid Tech

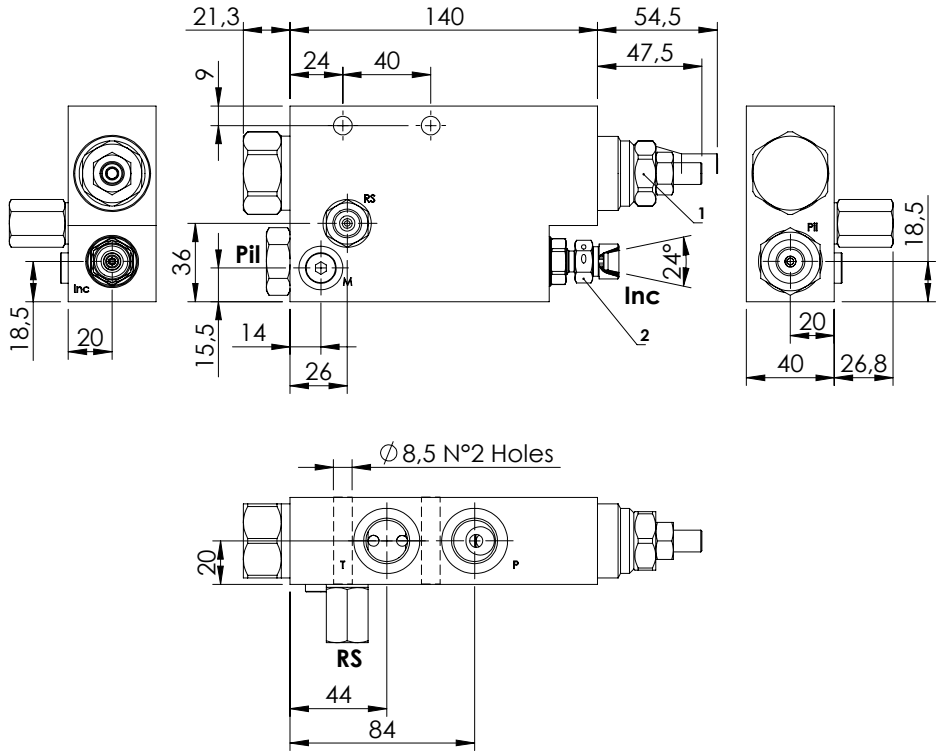

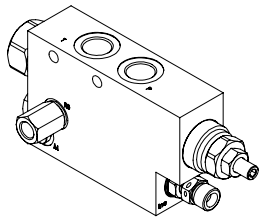

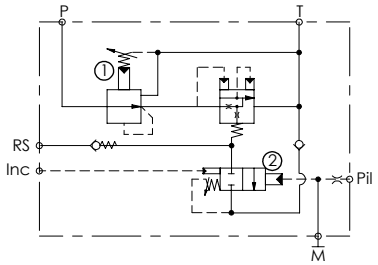

SPECIFICATIONS

Max. operating pressure:	**350 bar**
Rated flow:	**120 l/min**
Manifold:	**Aluminium**
Weight:	**1,91 kg**

SEALING CAP

Ordering cose:

AT000021

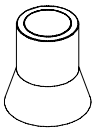

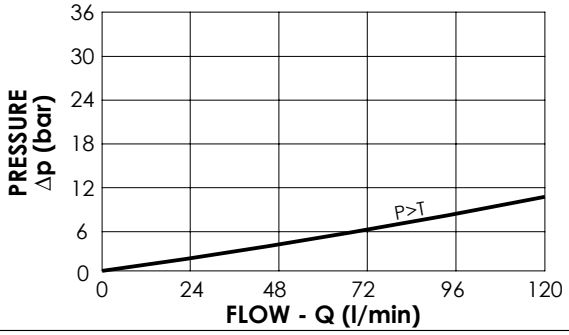

NOTES

ORDERING CODES

Quick code	Description	Main ports size	Standard setting (bar, Q=5 l/min)	Adjust. range (bar)	Pressure increase (bar/turn)
MT000010	**MTSN-120-TLNR-NP-G12-N350**	P,T:**G 1/2"** RS,Pil:**G 1/4"** Inc:**M16x1,5** M:**M10x1**	① **35** ② **350**	① **10-120** ② **70-210**	① **37** ② **92**

LOAD LIMITING DEVICE

MTTL-005-TLSN

PILOT PRESSURE UNLOADING

ATLANTIC Fluid Tech

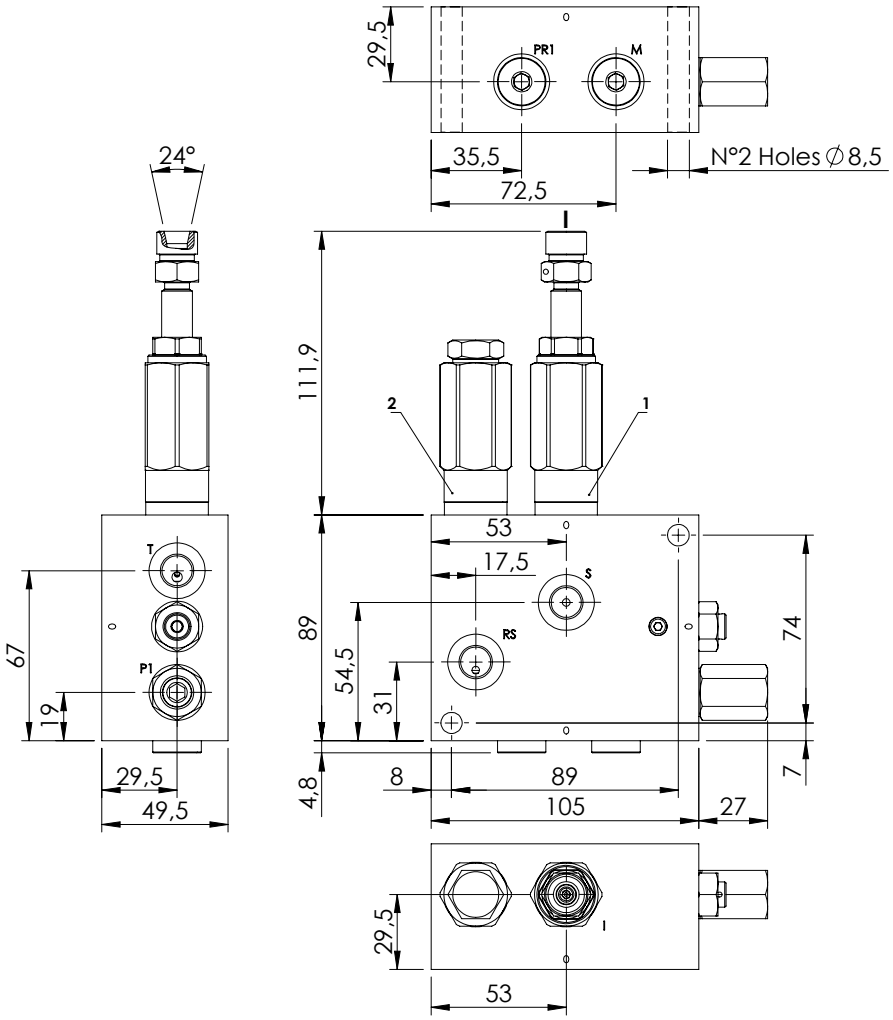

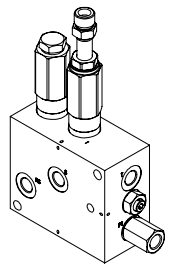

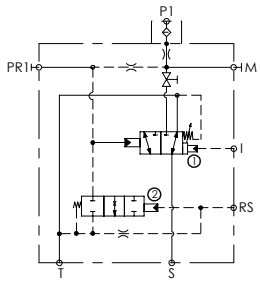

SPECIFICATIONS

Max. operating pressure:	**350 bar**
Rated flow:	**5 l/min**
Manifold:	**Aluminium**
Weight:	**1,85 kg**

NOTES

For info or special versions contact AFT sales network.

ORDERING CODES

Quick code	Description	Main ports size	Standard setting (bar, Q=5 l/min)	Adjust. range (bar)	Pressure increase (bar/turn)
MT000026	**MTTL-005-TLSN-NP-G14-N350**	P1,M,PR1,RS,T,S:**G 1/4"** I:**M16x1,5**	**200**	**50-300**	**23**

LOAD LIMITING DEVICE

MTTR-005-TLSN

PILOT PRESSURE UNLOADING FLAGE FOR PRESSURE SWITCH

ATLANTIC Fluid Tech

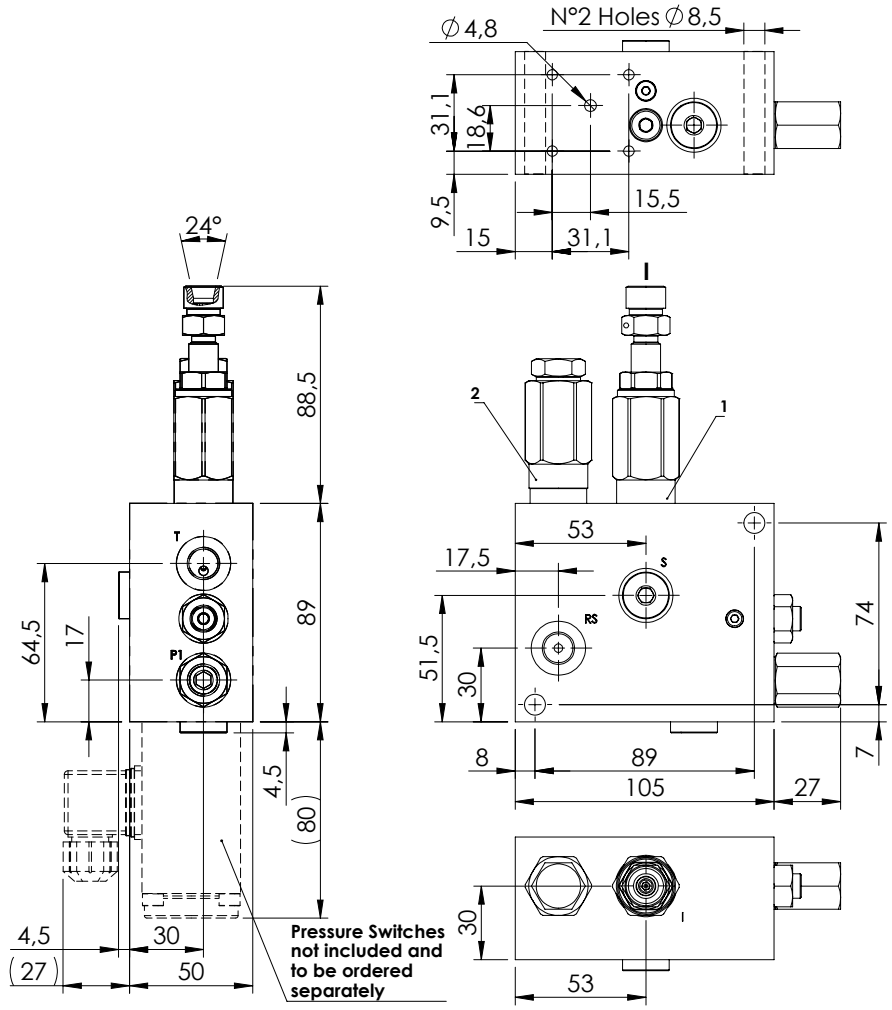

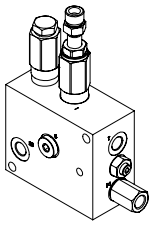

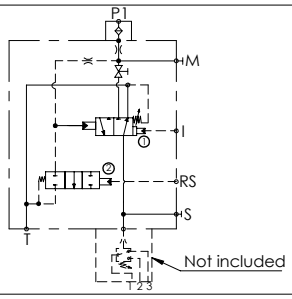

SPECIFICATIONS

Max. operating pressure:	**350 bar**
Rated flow:	**5 l/min**
Manifold:	**Aluminium**
Weight:	**1,78 kg**

NOTES

For info or special versions contact AFT sales network.

ORDERING CODES

Quick code	Description	Main ports size	Standard setting (bar, Q=5 l/min)	Adjust. range (bar)	Pressure increase (bar/turn)
MT000031	**MTTR-005-TLSN-NP-G14-N350**	P1,M,PR1,RS,T,S:**G 1/4"** I:**M16x1,5**	**280**	**100-350**	**109**

ATLANTIC
Fluid Tech

SECTION 15

Solenoid Cartridges

MANAGEMENT SYSTEM CERTIFICATION
DNV·GL
ISO 9001 = ISO 14001
OHSAS 18001

SOLENOID CARTRIDGES

ATLANTIC Fluid Tech

Hydraulic scheme	Valve description	Valve type	Rated flow (l/min)	Max. pressure (bar)	Installation	Main port size or cavity type	Page
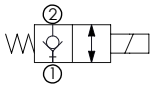	CEBN-001-NCFN-15	Direct acting, poppet type	1,5	350/500	Cartridge	SAE-08-2N	15.01.**010**
	CEBD-001-NCFN-15	Direct acting, poppet type	1	350	Cartridge	VP000445	15.01.**020**
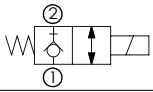	CEBN-001-NCFN-16	Direct acting, poppet type	1,5	350/500	Cartridge	SAE-08-2N	15.02.**030**
	CEBD-001-NCFN-16	Direct acting, poppet type	1	350	Cartridge	VP000445	15.02.**040**
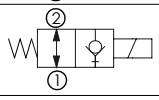	CEBN-001-NAFN-13	Direct acting, poppet type	1,5	350/500	Cartridge	SAE-08-2N	15.03.**050**
	CEBD-001-NAFN-13	Direct acting, poppet type	1	350	Cartridge	VP000445	15.03.**060**
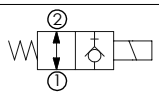	CEBN-001-NAFN-14	Direct acting, poppet type	1,5	350/500	Cartridge	SAE-08-2N	15.04.**070**
	CEBD-001-NAFN-14	Direct acting, poppet type	1	350	Cartridge	VP000445	15.04.**080**
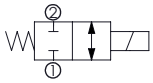	CEBS-010-NCFN-22	Direct acting, spool type	10	210	Cartridge	SAE-08-2N	15.05.**090**
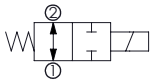	CEBS-010-NAFN-23	Direct acting, spool type	10	210	Cartridge	SAE-08-2N	15.06.**100**
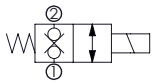	CEBD-015-NCFN-21	Direct acting, poppet type	15	210	Cartridge	SAE-08-2N	15.07.**110**
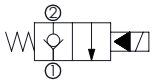	CEBP-020-NCFF-01	Pilot operated, poppet type, cable operated	20	250	Cartridge	SAE-08-2N	15.08.**120**
	CEBN-030-NCFN-01	Pilot operated, poppet type	30	350	Cartridge	SAE-08-2N	15.08.**130**
	CEBN-040-NCFN-01	Pilot operated, poppet type	40	350/500	Cartridge	SAE-08-2N	15.08.**140**
	CEBN-070-NCFN-01	Pilot operated, poppet type	70	350/500	Cartridge	SAE-10-2N	15.08.**150**
	CEBN-100-NCFN-01	Pilot operated, poppet type	100	350/500	Cartridge	VP000057	15.08.**160**
	CEBN-180-NCFN-01	Pilot operated, poppet type	180	350/500	Cartridge	SAE-12-2N	15.08.**170**
	CEBN-200-NCFN-01	Pilot operated, poppet type	200	350/500	Cartridge	VP000013	15.08.**180**
	CEBN-300-NCFN-01	Pilot operated, poppet type	300	350/500	Cartridge	SAE-16-2N	15.08.**190**
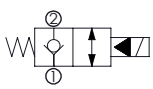	CEBN-030-NCFN-05	Pilot operated, poppet type	30	350	Cartridge	SAE-08-2N	15.09.**200**
	CEBN-040-NCFN-05	Pilot operated, poppet type	40	350/500	Cartridge	SAE-08-2N	15.09.**210**
	CEBN-070-NCFN-05	Pilot operated, poppet type	70	350/500	Cartridge	SAE-10-2N	15.09.**220**
	CEBN-100-NCFN-05	Pilot operated, poppet type	100	350/500	Cartridge	VP000057	15.09.**230**
	CEBN-180-NCFN-05	Pilot operated, poppet type	180	350/500	Cartridge	SAE-12-2N	15.09.**240**
	CEBN-200-NCFN-05	Pilot operated, poppet type	200	350/500	Cartridge	VP000013	15.09.**250**
	CEBN-300-NCFN-05	Pilot operated, poppet type	300	350/500	Cartridge	SAE-16-2N	15.09.**260**
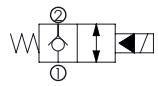	CEBN-040-NCFN-03	Pilot operated, poppet type	40	350/500	Cartridge	SAE-08-2N	15.10.**270**
	CEBN-070-NCFN-03	Pilot operated, poppet type	70	350/500	Cartridge	SAE-10-2N	15.10.**280**
	CEBN-100-NCFN-03	Pilot operated, poppet type	100	350/500	Cartridge	VP000057	15.10.**290**
	CEBN-200-NCFN-03	Pilot operated, poppet type	200	350/500	Cartridge	VP000013	15.10.**300**
	CEBN-300-NCFN-03	Pilot operated, poppet type	300	350/500	Cartridge	SAE-16-2N	15.10.**310**
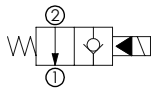	CEBN-030-NAFN-02	Pilot operated, poppet type	30	350	Cartridge	SAE-08-2N	15.11.**320**
	CEBN-040-NAFN-02	Pilot operated, poppet type	40	350/500	Cartridge	SAE-08-2N	15.11.**330**
	CEBN-070-NAFN-02	Pilot operated, poppet type	70	350/500	Cartridge	SAE-10-2N	15.11.**340**
	CEBN-100-NAFN-02	Pilot operated, poppet type	100	350/500	Cartridge	VP000057	15.11.**350**
	CEBN-180-NAFN-02	Pilot operated, poppet type	180	350/500	Cartridge	SAE-12-2N	15.11.**360**
	CEBN-200-NAFN-02	Pilot operated, poppet type	200	350/500	Cartridge	VP000013	15.11.**370**
	CEBN-300-NAFN-02	Pilot operated, poppet type	300	350/500	Cartridge	SAE-16-2N	15.11.**380**
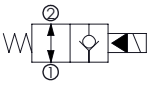	CEBN-030-NAFN-06	Pilot operated, poppet type	30	350	Cartridge	SAE-08-2N	15.12.**390**
	CEBN-040-NAFN-06	Pilot operated, poppet type	40	350/500	Cartridge	SAE-08-2N	15.12.**400**
	CEBN-070-NAFN-06	Pilot operated, poppet type	70	350/500	Cartridge	SAE-10-2N	15.12.**410**
	CEBN-100-NAFN-06	Pilot operated, poppet type	100	350/500	Cartridge	VP000057	15.12.**420**
	CEBN-180-NAFN-06	Pilot operated, poppet type	180	350/500	Cartridge	SAE-12-2N	15.12.**430**
	CEBN-200-NAFN-06	Pilot operated, poppet type	200	350/500	Cartridge	VP000013	15.12.**440**
	CEBN-300-NAFN-06	Pilot operated, poppet type	300	350/500	Cartridge	SAE-16-2N	15.12.**450**

SOLENOID CARTRIDGES

ATLANTIC Fluid Tech

Hydraulic scheme	Valve description	Valve type	Rated flow (l/min)	Max. pressure (bar)	Installation	Main port size or cavity type	Page
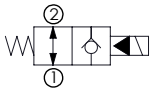	CEBN-040-NAFN-04	Pilot operated, poppet type	40	350/500	Cartridge	SAE-08-2N	15.13.**460**
	CEBN-070-NAFN-04	Pilot operated, poppet type	70	350/500	Cartridge	SAE-10-2N	15.13.**470**
	CEBN-100-NAFN-04	Pilot operated, poppet type	100	350/500	Cartridge	VP000057	15.13.**480**
	CEBN-200-NAFN-04	Pilot operated, poppet type	200	350/500	Cartridge	VP000013	15.13.**490**
	CEBN-300-NAFN-04	Pilot operated, poppet type	300	350/500	Cartridge	SAE-16-2N	15.13.**500**
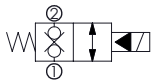	CEBN-040-NCFN-31	Pilot operated, poppet type	40	350/500	Cartridge	SAE-08-2N	15.14.**510**
	CEBN-070-NCFN-31	Pilot operated, poppet type	70	350/500	Cartridge	SAE-10-2N	15.14.**520**
	CEBN-100-NCFN-31	Pilot operated, poppet type	100	350/500	Cartridge	VP000057	15.14.**530**
	CEBN-180-NCFN-31	Pilot operated, poppet type	180	350/500	Cartridge	SAE-12-2N	15.14.**540**
	CEBN-200-NCFN-31	Pilot operated, poppet type	200	350/500	Cartridge	VP000013	15.14.**550**
	CEBN-300-NCFN-31	Pilot operated, poppet type	300	350/500	Cartridge	SAE-16-2N	15.14.**560**
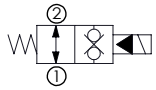	CEBN-040-NAFN-32	Pilot operated, poppet type	40	350/500	Cartridge	SAE-08-2N	15.15.**570**
	CEBN-070-NAFN-32	Pilot operated, poppet type	70	350/500	Cartridge	SAE-10-2N	15.15.**580**
	CEBN-100-NAFN-32	Pilot operated, poppet type	100	350/500	Cartridge	VP000057	15.15.**590**
	CEBN-180-NAFN-32	Pilot operated, poppet type	180	350/500	Cartridge	SAE-12-2N	15.15.**600**
	CEBN-200-NAFN-32	Pilot operated, poppet type	200	350/500	Cartridge	VP000013	15.15.**610**
	CEBN-300-NAFN-32	Pilot operated, poppet type	300	350/500	Cartridge	SAE-16-2N	15.15.**620**
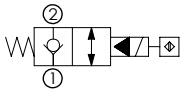	CEBN-040-NCDR-100	Pilot operated, proximity sensor	40	350	Cartridge	SAE-08-2N	15.16.**630**
	CEBN-070-NCDR-100	Pilot operated, proximity sensor	70	350	Cartridge	SAE-10-2N	15.16.**640**
	CEBN-100-NCDR-100	Pilot operated, proximity sensor	100	350	Cartridge	VP000057	15.16.**650**
	CEBN-180-NCDR-100	Pilot operated, proximity sensor	180	350	Cartridge	SAE-12-2N	15.16.**660**
	CEBN-200-NCDR-100	Pilot operated, proximity sensor	200	350	Cartridge	VP000013	15.16.**670**
	CEBN-300-NCDR-100	Pilot operated, proximity sensor	300	350	Cartridge	SAE-16-2N	15.16.**680**
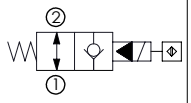	CEBN-040-NADR-101	Pilot operated, proximity sensor	40	350	Cartridge	SAE-08-2N	15.17.**690**
	CEBN-070-NADR-101	Pilot operated, proximity sensor	70	350	Cartridge	SAE-10-2N	15.17.**700**
	CEBN-100-NADR-101	Pilot operated, proximity sensor	100	350	Cartridge	VP000057	15.17.**710**
	CEBN-180-NADR-101	Pilot operated, proximity sensor	180	350	Cartridge	SAE-12-2N	15.17.**720**
	CEBN-200-NADR-101	Pilot operated, proximity sensor	200	350	Cartridge	VP000013	15.17.**730**
	CEBN-300-NADR-101	Pilot operated, proximity sensor	300	350	Cartridge	SAE-16-2N	15.17.**740**
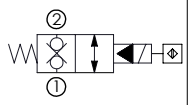	CEBN-040-NCDR-120	Pilot operated, proximity sensor	40	350	Cartridge	SAE-08-2N	15.18.**750**
	CEBN-070-NCDR-120	Pilot operated, proximity sensor	70	350	Cartridge	SAE-10-2N	15.18.**760**
	CEBN-100-NCDR-120	Pilot operated, proximity sensor	100	350	Cartridge	VP000057	15.18.**770**
	CEBN-180-NCDR-120	Pilot operated, proximity sensor	180	350	Cartridge	SAE-12-2N	15.18.**780**
	CEBN-200-NCDR-120	Pilot operated, proximity sensor	200	350	Cartridge	VP000013	15.18.**790**
	CEBN-300-NCDR-120	Pilot operated, proximity sensor	300	350	Cartridge	SAE-16-2N	15.18.**800**
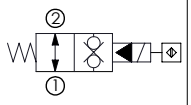	CEBN-040-NCDR-121	Pilot operated, proximity sensor	40	350	Cartridge	SAE-08-2N	15.19.**810**
	CEBN-070-NCDR-121	Pilot operated, proximity sensor	70	350	Cartridge	SAE-10-2N	15.19.**820**
	CEBN-100-NCDR-121	Pilot operated, proximity sensor	100	350	Cartridge	VP000057	15.19.**830**
	CEBN-180-NCDR-121	Pilot operated, proximity sensor	180	350	Cartridge	SAE-12-2N	15.19.**840**
	CEBN-200-NCDR-121	Pilot operated, proximity sensor	200	350	Cartridge	VP000013	15.19.**850**
	CEBN-300-NCDR-121	Pilot operated, proximity sensor	300	350	Cartridge	SAE-16-2N	15.19.**860**
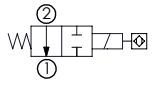	CEBD-040-NAMV CEBD-040-NACV	Direct acting, poppet type	40	350	Cartridge	VP000338	15.20.**870**
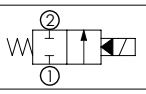	CEBT-300-NCFN-98	Piloted operated, spool type	300	350	Cartridge	SAE-16-2N	15.21.**880**
	CEBT-500-NCFN-98	Piloted operated, spool type	500	350	Cartridge	SAE-20-2N	15.21.**890**
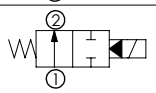	CEBT-300-NAFN-99	Piloted operated, spool type	300	350	Cartridge	SAE-16-2N	15.22.**900**
	CEBT-500-NAFN-99	Piloted operated, spool type	500	350	Cartridge	SAE-20-2N	15.22.**910**
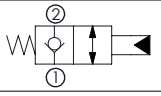	CEBN-040-NCAN-05	Pneumatic operated, poppet type	40	350	Cartridge	SAE-08-2N	15.23.**920**
	CEBN-200-NCAN-05	Pneumatic operated, poppet type	200	350	Cartridge	VP000013	15.23.**930**
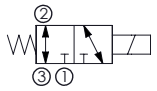	CECS-010-SEFN-61	Direct acting, spool type	10	210	Cartridge	SAE-08-3N	15.24.**940**

SOLENOID CARTRIDGES

ATLANTIC Fluid Tech

Hydraulic scheme	Valve description	Valve type	Rated flow (l/min)	Max. pressure (bar)	Installation	Main port size or cavity type	Page
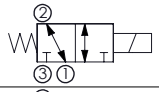	CECS-010-SEFN-62	Direct acting, spool type	10	210	Cartridge	SAE-08-3N	15.25.**950**
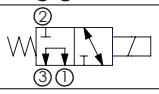	CECS-010-SEFN-63	Direct acting, spool type	10	210	Cartridge	SAE-08-3N	15.26.**960**
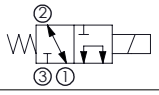	CECS-010-SEFN-64	Direct acting, spool type	10	210	Cartridge	SAE-08-3N	15.27.**970**
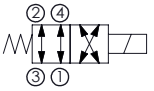	CEDS-010-SEFN-40	Direct acting, spool type	10	210	Cartridge	SAE-08-4N	15.28.**980**
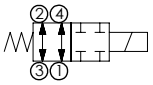	CEDS-010-SEFN-49	Direct acting, spool type	10	210	Cartridge	SAE-08-4N	15.29.**990**
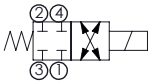	CEDS-010-SEFN-41	Direct acting, spool type	10	210	Cartridge	SAE-08-4N	15.30.**1000**
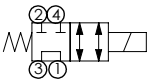	CEDS-010-SEFN-43	Direct acting, spool type	10	210	Cartridge	SAE-08-4N	15.31.**1010**
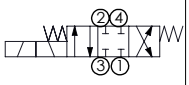	CEES-010-SEFN-51	Direct acting, spool type	10	210	Cartridge	SAE-08-4N	15.32.**1020**
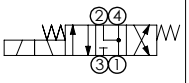	CEES-010-SEFN-52	Direct acting, spool type	10	210	Cartridge	SAE-08-4N	15.33.**1030**
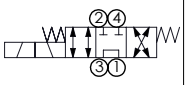	CEES-010-SEFN-53	Direct acting, spool type	10	210	Cartridge	SAE-08-4N	15.34.**1040**
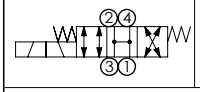	CEES-010-SEFN-54	Direct acting, spool type	10	210	Cartridge	SAE-08-4N	15.35.**1050**

SOLENOID OPERATED CARTRIDGE

CEBD-001-NCFN

DIRECT OPERATED POPPET TYPE

ATLANTIC Fluid Tech

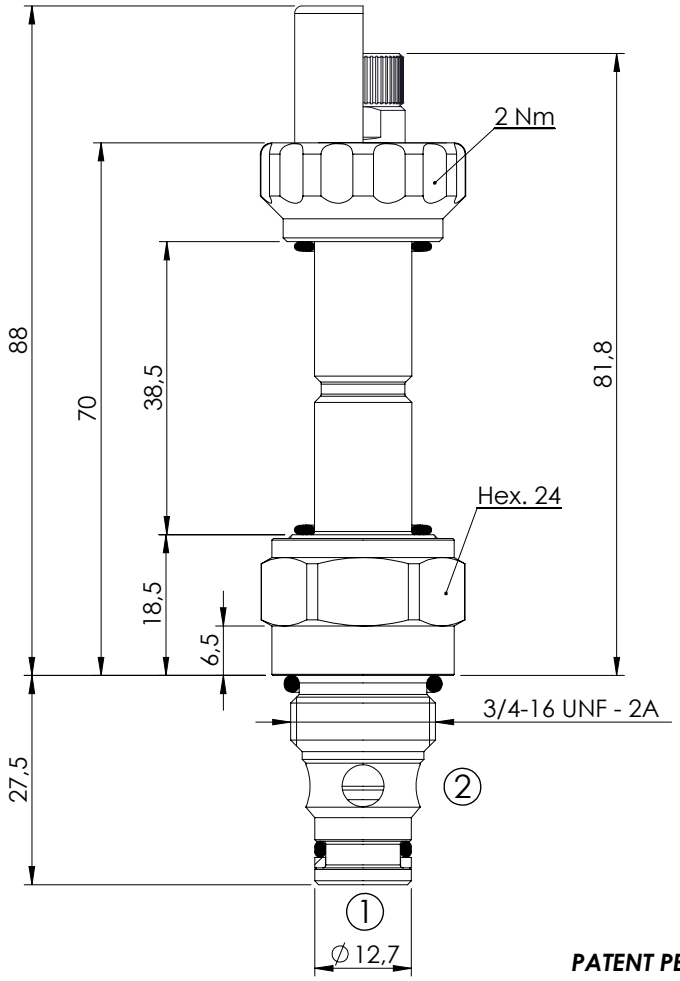

PATENT PENDING

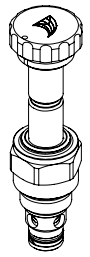

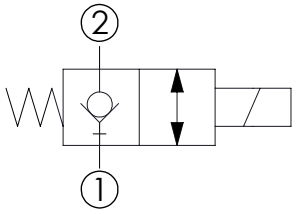

SPECIFICATIONS

Max. operating pressure:	350/500 bar
Rated flow:	1,5 l/min
Cavity:	SAE-08-2N
Weight:	0,14 kg
Min. voltage required:	90% of nominal
Coil type:	M7 type
Seal kit:	RA900081

NOTES

Installation torque: 45 - 50 Nm

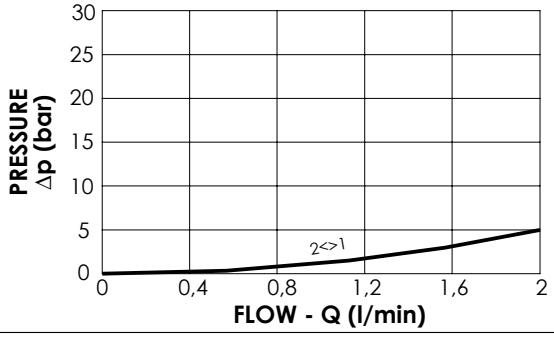

OPTIONS

Standard

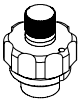

Knob style override

SEALING CAP

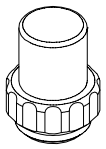

Ordering code: AT000113

ORDERING CODES

Quick code	Description	Options	Max operating pressure (bar)	
CE000200	CEBD-001-NCFN-15-S08-N350	Standard	350	
CE000201	CEBD-001-NCFK-15-S08-N350	Knob style override	350	
CE000500	CEBD-001-NCFN-15-S08-N500	Standard	500	
CE000501	CEBD-001-NCFK-15-S08-N500	Knob style override	500	

SOLENOID OPERATED CARTRIDGE

CEBN-001-NCFN

DIRECT OPERATED POPPET TYPE

ATLANTIC Fluid Tech

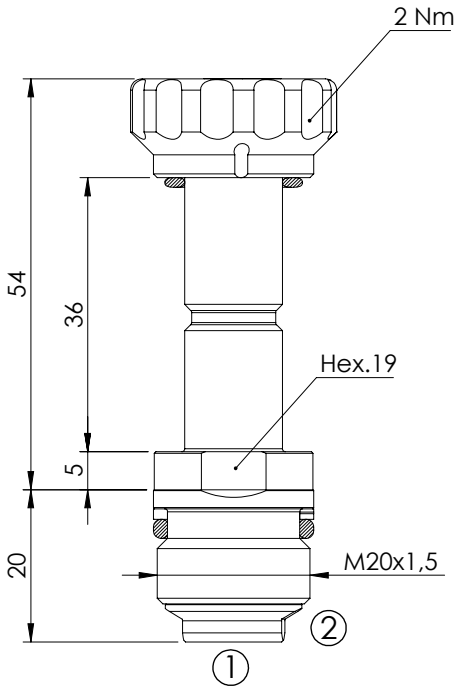

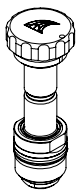

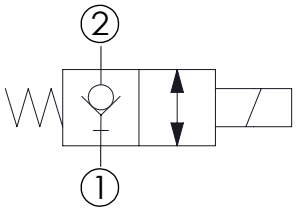

SPECIFICATIONS

Max. operating pressure:	350 bar
Rated flow:	1 l/min
Cavity:	VP000445
Weight:	0,1 kg
Min. voltage required:	90% of nominal
Coil type:	M7 type
Seal kit:	RC700445

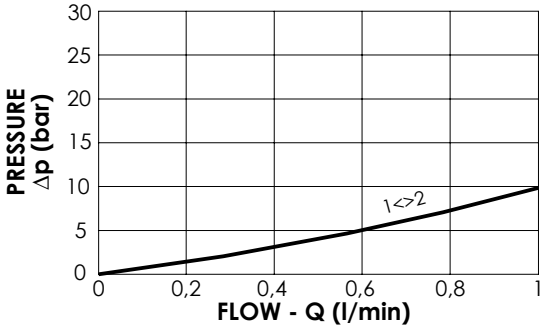

NOTES

Installation torque:	40 - 45 Nm

ORDERING CODES

Quick code	Description	Max operating pressure (bar)	
CE000870	CEBN-001-NCFN-15-445-N350	350	

SOLENOID OPERATED CARTRIDGE

CEBD-001-NCFN

DIRECT OPERATED POPPET TYPE

ATLANTIC Fluid Tech

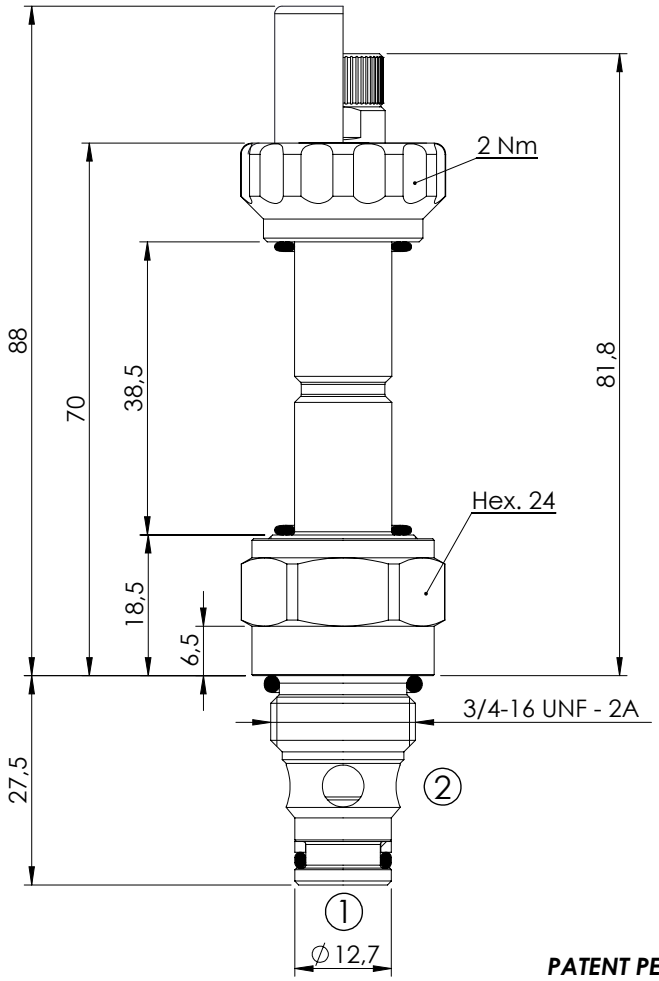

PATENT PENDING

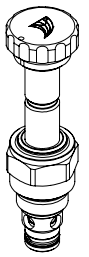

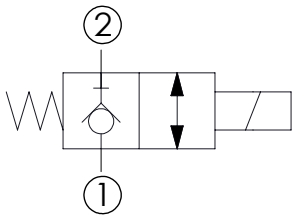

SPECIFICATIONS

Max. operating pressure:	350/500 bar
Rated flow:	1,5 l/min
Cavity:	SAE-08-2N
Weight:	0,14 kg
Min. voltage required:	90% of nominal
Coil type:	M7 type
Seal kit:	RA900081

NOTES

Installation torque:	45 - 50 Nm

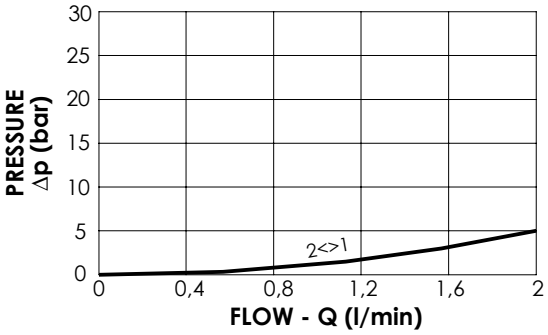

OPTIONS

Standard

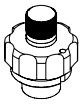

Knob style override

SEALING CAP

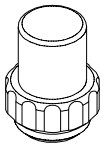

Ordering code: AT000113

ORDERING CODES

Quick code	Description	Options	Max operating pressure (bar)	
CE000202	CEBD-001-NCFN-16-S08-N350	Standard	350	
CE000203	CEBD-001-NCFK-16-S08-N350	Knob style override	350	
CE000502	CEBD-001-NCFN-16-S08-N500	Standard	500	
CE000503	CEBD-001-NCFK-16-S08-N500	Knob style override	500	

SOLENOID OPERATED CARTRIDGE

CEBN-001-NCFN

DIRECT OPERATED POPPET TYPE

ATLANTIC Fluid Tech

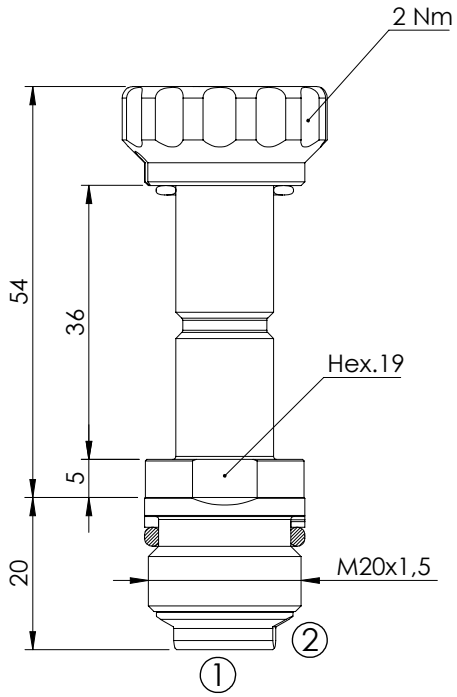

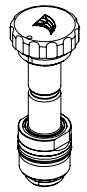

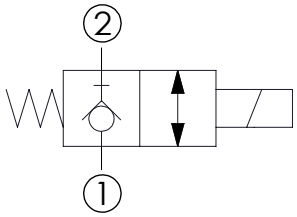

SPECIFICATIONS

Max. operating pressure:	350 bar
Rated flow:	1 l/min
Cavity:	VP000445
Weight:	0,1 kg
Min. voltage required:	90% of nominal
Coil type:	M7 type
Seal kit:	RC700445

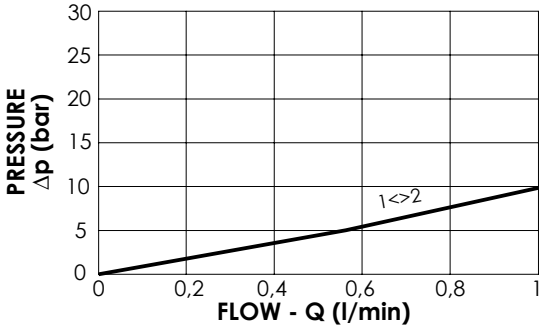

NOTES

Installation torque:	40 - 45 Nm

ORDERING CODES

Quick code	Description	Max operating pressure (bar)	
CE000871	CEBN-001-NCFN-16-445-N350	350	

SOLENOID OPERATED CARTRIDGE

CEBD-001-NAFN

DIRECT OPERATED POPPET TYPE

ATLANTIC Fluid Tech

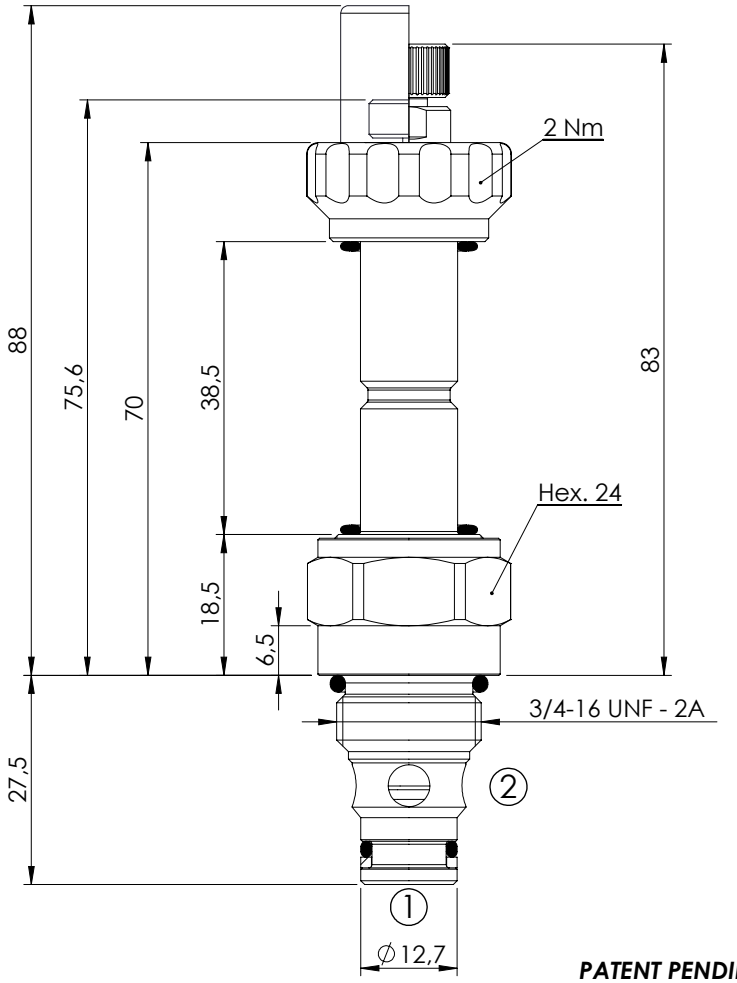

PATENT PENDING

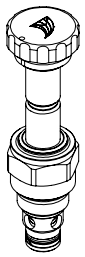

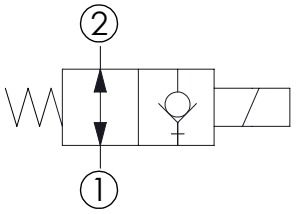

SPECIFICATIONS

Max. operating pressure:	350/500 bar
Rated flow:	1,5 l/min
Cavity:	SAE-08-2N
Weight:	0,14 kg
Min. voltage required:	90% of nominal
Coil type:	M7 type
Seal kit:	RA900081

NOTES

Installation torque:	45 - 50 Nm

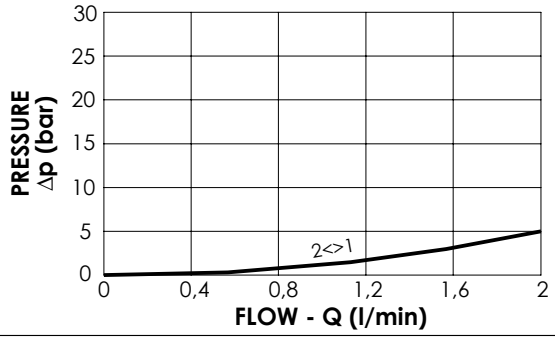

OPTIONS

Standard

Push style override

Knob style override

SEALING CAP

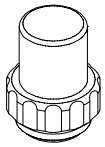

Ordering code: AT000113

ORDERING CODES

Quick code	Description	Options	Max operating pressure (bar)	
CE000204	CEBD-001-NAFN-13-S08-N350	Standard	350	
CE000205	CEBD-001-NAFP-13-S08-N350	Push style override	350	
CE000206	CEBD-001-NAFK-13-S08-N350	Knob style override	350	
CE000504	CEBD-001-NAFN-13-S08-N500	Standard	500	
CE000505	CEBD-001-NAFP-13-S08-N500	Push style override	500	
CE000506	CEBD-001-NAFK-13-S08-N500	Knob style override	500	

SOLENOID OPERATED CARTRIDGE

CEBN-001-NAFN

DIRECT OPERATED POPPET TYPE

ATLANTIC Fluid Tech

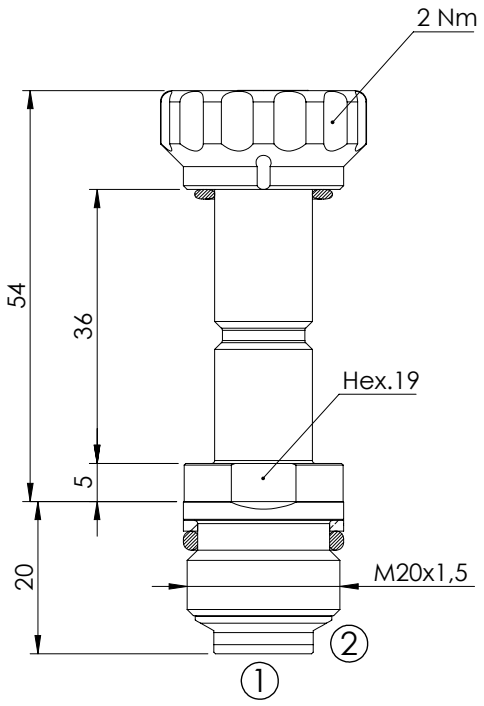

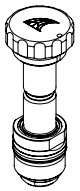

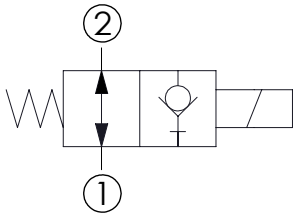

SPECIFICATIONS

Max. operating pressure:	350 bar
Rated flow:	1 l/min
Cavity:	VP000445
Weight:	0,1 kg
Min. voltage required:	90% of nominal
Coil type:	M7 type
Seal kit:	RC700445

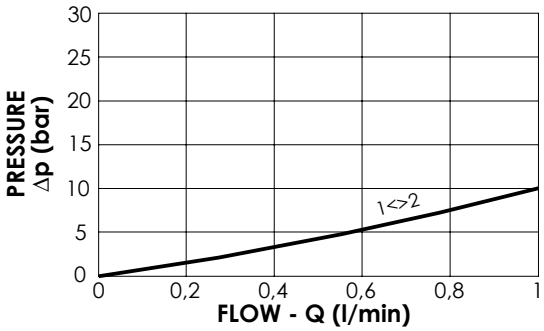

NOTES

Installation torque:	40 - 45 Nm

ORDERING CODES

Quick code	Description	Max operating pressure (bar)	
CE000872	CEBN-001-NAFN-13-445-N350	350	

SOLENOID OPERATED CARTRIDGE

CEBD-001-NAFN

DIRECT OPERATED POPPET TYPE

ATLANTIC Fluid Tech

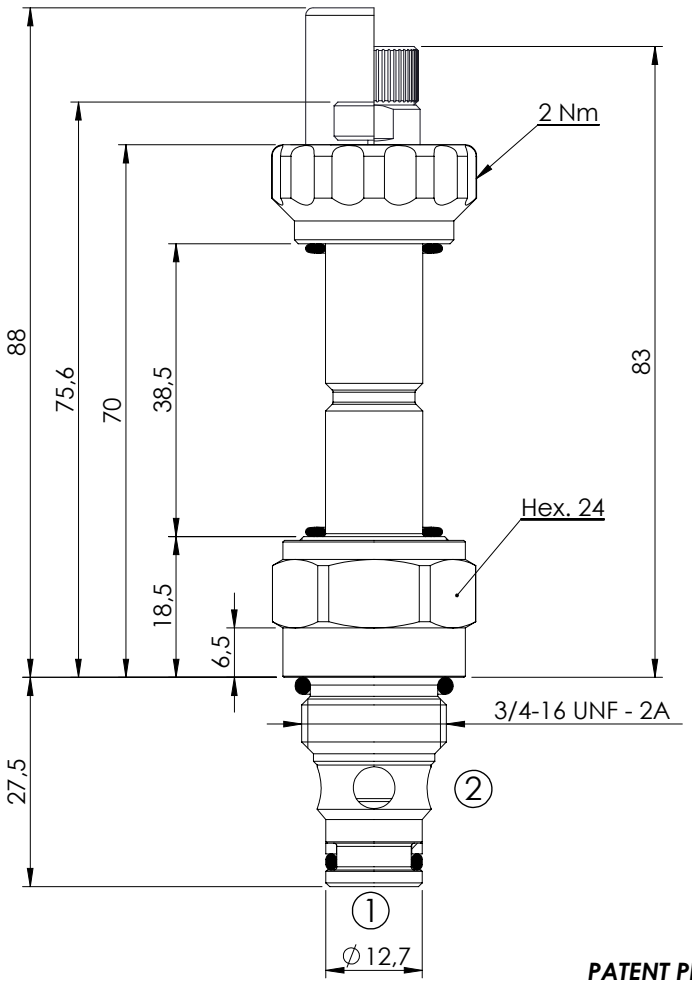

PATENT PENDING

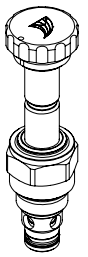

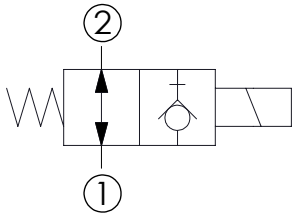

SPECIFICATIONS

Max. operating pressure:	350/500 bar
Rated flow:	1,5 l/min
Cavity:	SAE-08-2N
Weight:	0,15 kg
Min. voltage required:	90% of nominal
Coil type:	M7 type
Seal kit:	RA900081

NOTES

Installation torque: 45 - 50 Nm

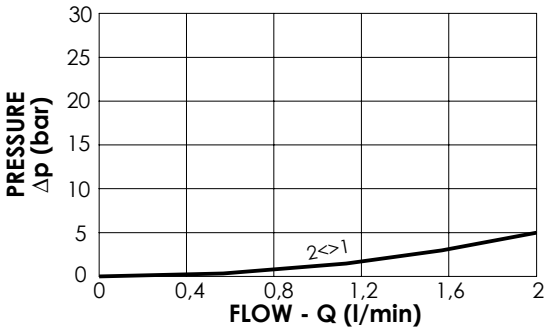

OPTIONS

Standard

Push style override

Knob style override

SEALING CAP

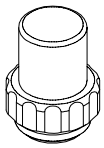

Ordering code: AT000113

ORDERING CODES

Quick code	Description	Options	Max operating pressure (bar)	
CE000207	CEBD-001-NAFN-14-S08-N350	Standard	350	
CE000208	CEBD-001-NAFP-14-S08-N350	Push style override	350	
CE000209	CEBD-001-NAFK-14-S08-N350	Knob style override	350	
CE000507	CEBD-001-NAFN-14-S08-N500	Standard	500	
CE000508	CEBD-001-NAFP-14-S08-N500	Push style override	500	
CE000509	CEBD-001-NAFK-14-S08-N500	Knob style override	500	

SOLENOID OPERATED CARTRIDGE

CEBN-001-NAFN

DIRECT OPERATED POPPET TYPE

ATLANTIC Fluid Tech

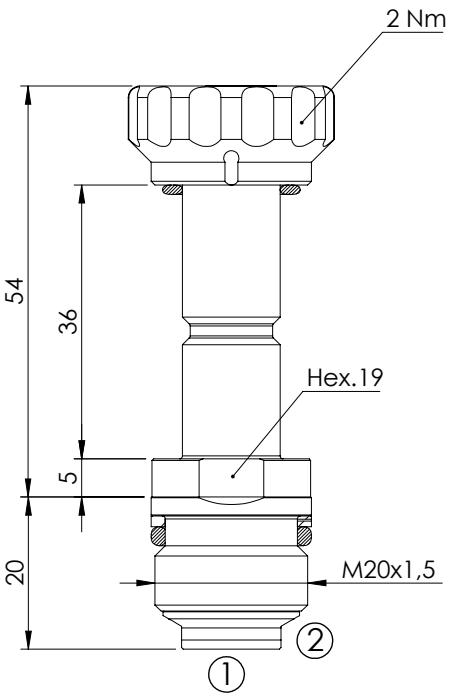

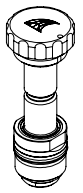

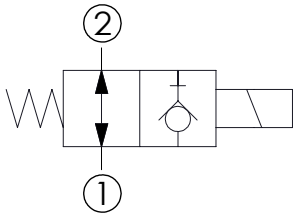

SPECIFICATIONS

Max. operating pressure:	350 bar
Rated flow:	1 l/min
Cavity:	VP000445
Weight:	0,1 kg
Min. voltage required:	90% of nominal
Coil type:	M7 type
Seal kit:	RC700445

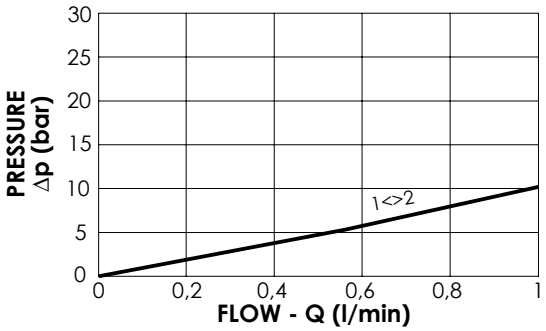

NOTES

Installation torque:	40 - 45 Nm

ORDERING CODES

Quick code	Description	Max operating pressure (bar)	
CE000873	CEBN-001-NAFN-14-445-N350	350	

SOLENOID OPERATED CARTRIDGE

CEBS-010-NCFN

DIRECT OPERATED SPOOL TYPE

ATLANTIC Fluid Tech

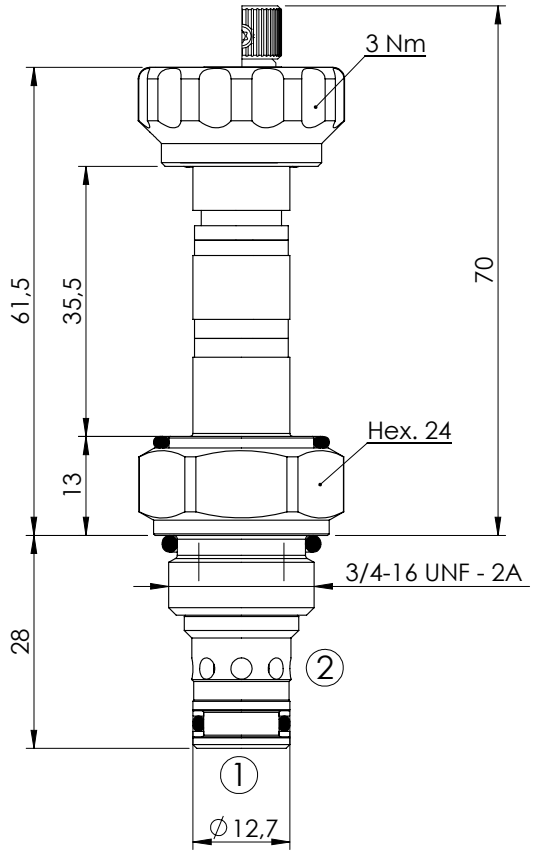

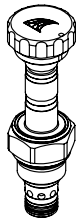

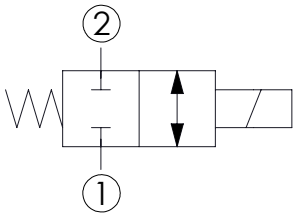

SPECIFICATIONS

Max. operating pressure:	210 bar
Rated flow:	10 l/min
Cavity:	SAE-08-2N
Weight:	0,12 kg
Min. voltage required:	90% of nominal
Coil type:	M7 type
Seal kit:	RB700081

NOTES

Installation torque:	45 - 50 Nm

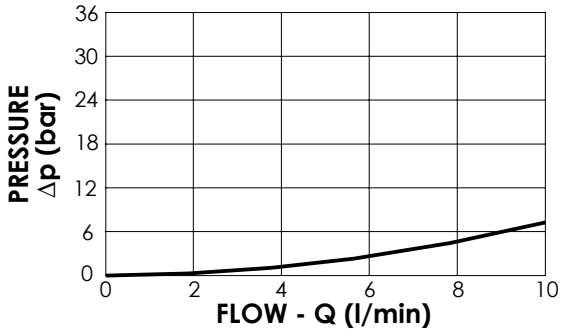

OPTIONS

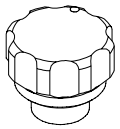

Standard

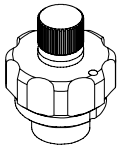

Knob style override

ORDERING CODES

Quick code	Description	Options	
CE000092	CEBS-010-NCFN-22-S08-N210	Standard	
CE000093	CEBS-010-NCFE-22-S08-N210	Knob style override	

SOLENOID OPERATED CARTRIDGE

CEBS-010-NAFN

DIRECT OPERATED SPOOL TYPE

ATLANTIC Fluid Tech

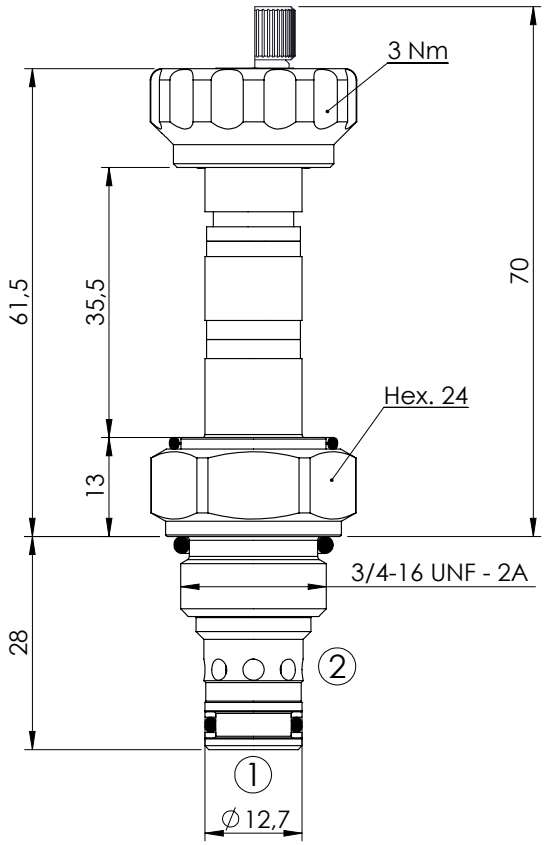

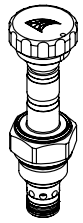

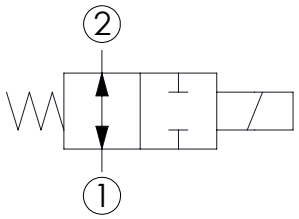

SPECIFICATIONS

Max. operating pressure:	210 bar
Rated flow:	10 l/min
Cavity:	SAE-08-2N
Weight:	0,12 kg
Min. voltage required:	90% of nominal
Coil type:	M7 type
Seal kit:	RB700081

NOTES

Installation torque:	45 - 50 Nm

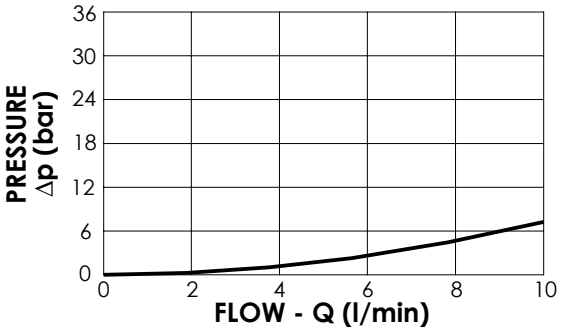

OPTIONS

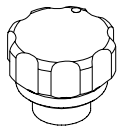

Standard

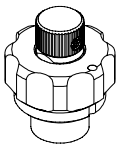

Knob style override

ORDERING CODES

Quick code	Description	Options	
CE000090	CEBS-010-NAFN-23-S08-N210	Standard	
CE000091	CEBS-010-NAFE-23-S08-N210	Knob style override	

SOLENOID OPERATED CARTRIDGE

CEBD-015-NCFN

DIRECT OPERATED POPPET TYPE

ATLANTIC Fluid Tech

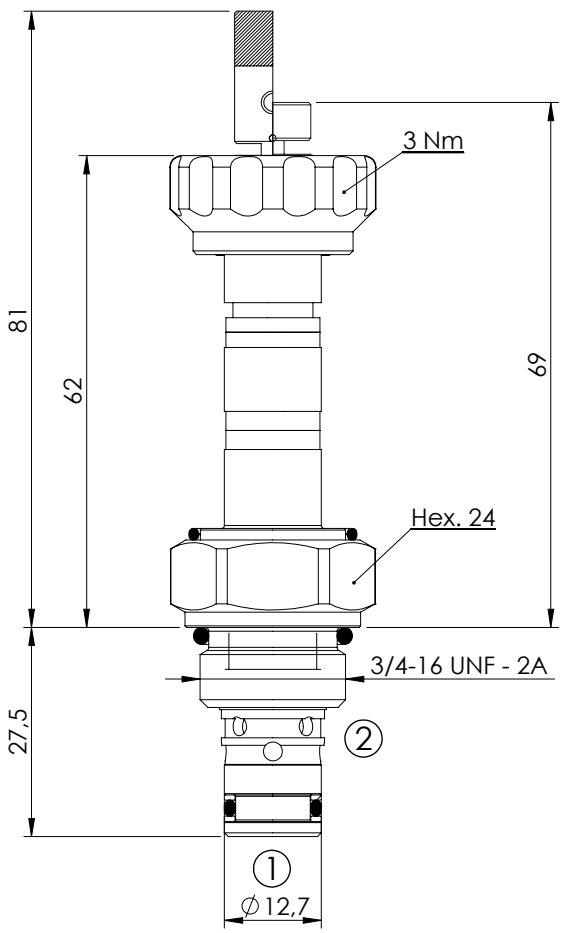

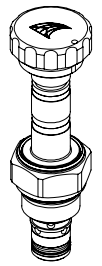

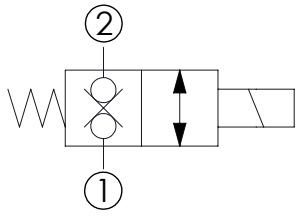

SPECIFICATIONS

Max. operating pressure:	210 bar
Rated flow:	15 l/min
Cavity:	SAE-08-2N
Weight:	0,12 kg
Min. voltage required:	90% of nominal
Coil type:	M7 type
Seal kit:	RB700081

NOTES

Installation torque:	45 - 50 Nm

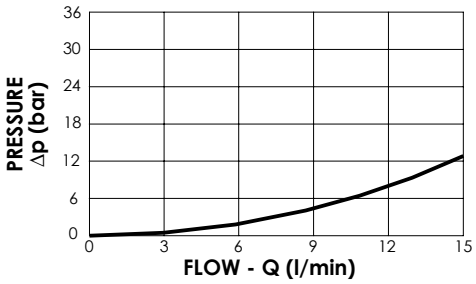

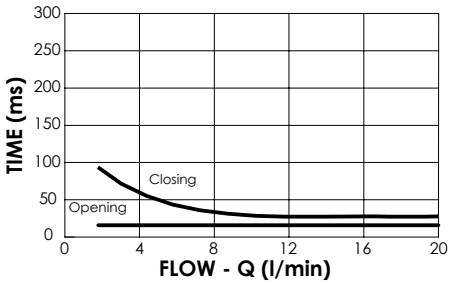

OPTIONS

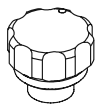

Standard

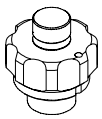

Push style override

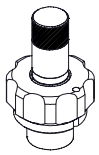

Push and twist style override

ORDERING CODES

Quick code	Description	Options	
CE000062	CEBD-015-NCFN-21-S08-N210	Standard	
CE000063	CEBD-015-NCFE-21-S08-N210	Push style override	
CE000905	CEBD-015-NCFE-21-S08-N210-T	Push and twist style override	

SOLENOID OPERATED CARTRIDGE

CEBN-040-NCFF

PILOT OPERATED POPPET TYPE

ATLANTIC Fluid Tech

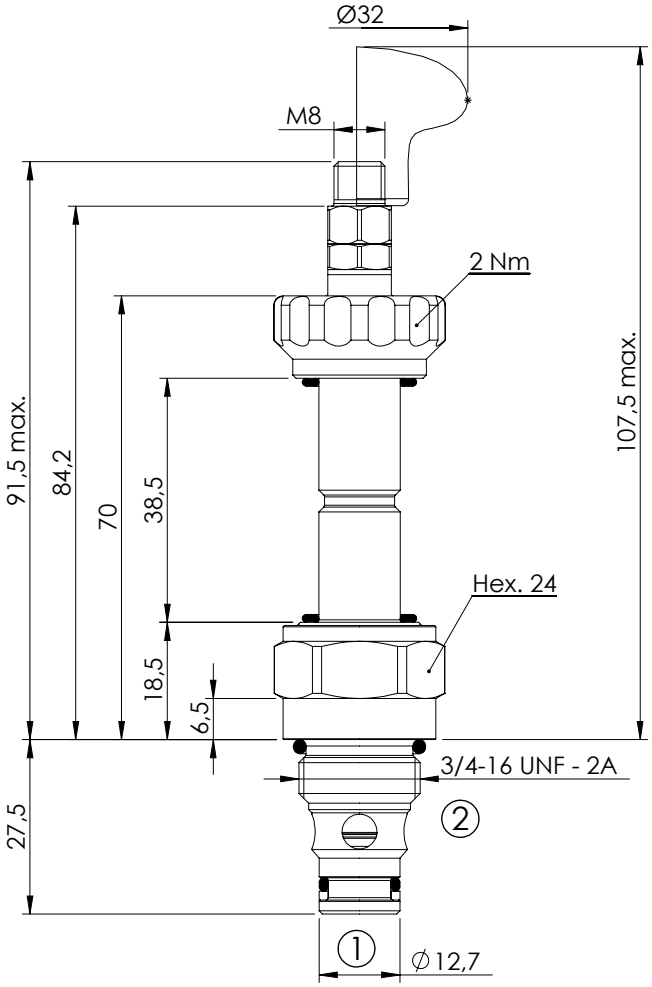

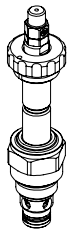

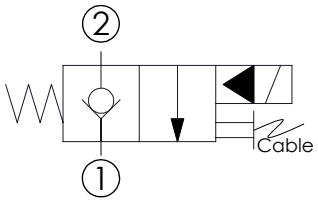

SPECIFICATIONS

Max. operating pressure:	350 bar
Rated flow:	40 l/min
Cavity:	SAE-08-2N
Weight:	0,16 kg
Min. voltage required:	90% of nominal
Coil type:	M7 type
Seal kit:	RA900081

NOTES

Installation torque:	45 - 50 Nm

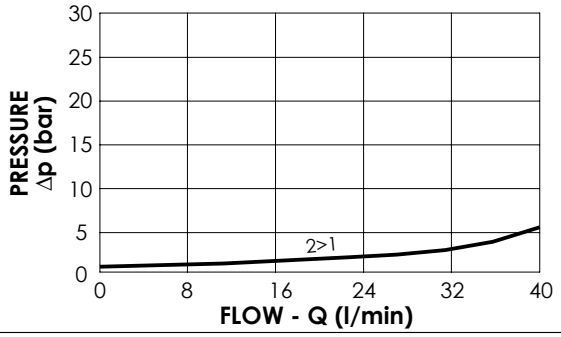

OPTIONS

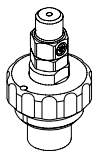

Cable Operated

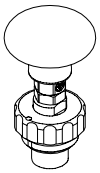

Hand Operated

ORDERING CODES

Quick code	Description	Options		
CE000470	CEBN-040-NCFF-01-S08-N350	Cable Operated		
CE000799	CEBN-040-NCFM-01-S08-N350	Hand Operated		

SOLENOID OPERATED CARTRIDGE

CEBN-030-NCFN

PILOT OPERATED POPPET TYPE

ATLANTIC Fluid Tech

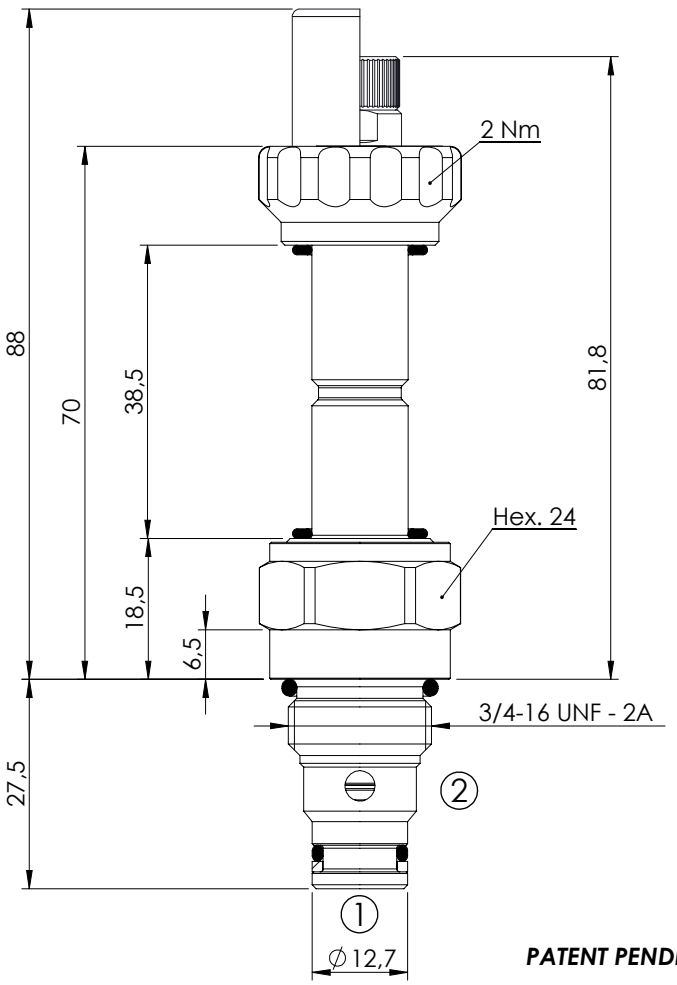

PATENT PENDING

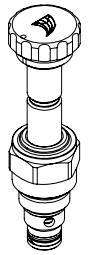

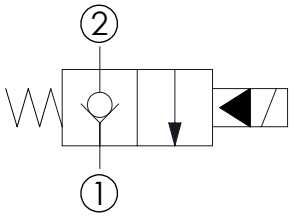

SPECIFICATIONS

Max. operating pressure:	350 bar
Rated flow:	30 l/min
Cavity:	SAE-08-2N
Weight:	0,15 kg
Min. voltage required:	90% of nominal
Coil type:	M7 type
Seal kit:	RA900081

NOTES

Installation torque:	45 - 50 Nm

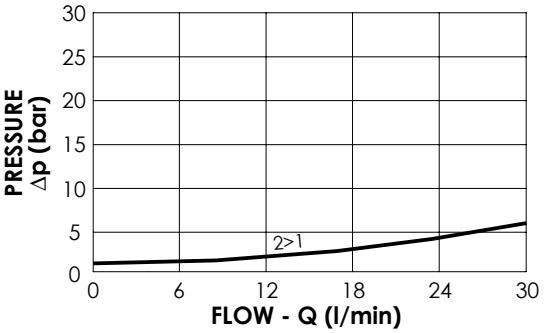

OPTIONS

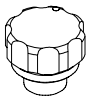

Standard

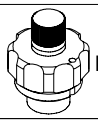

Knob style override

SEALING CAP

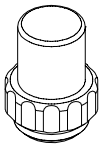

Ordering code: AT000113

ORDERING CODES

Quick code	Description	Options	Max operating pressure (bar)	
CE000455	CEBN-030-NCFN-01-S08-N350	Standard	350	
CE000456	CEBN-030-NCFK-01-S08-N350	Knob style override	350	

SOLENOID OPERATED CARTRIDGE

CEBN-040-NCFN

PILOT OPERATED POPPET TYPE

ATLANTIC Fluid Tech

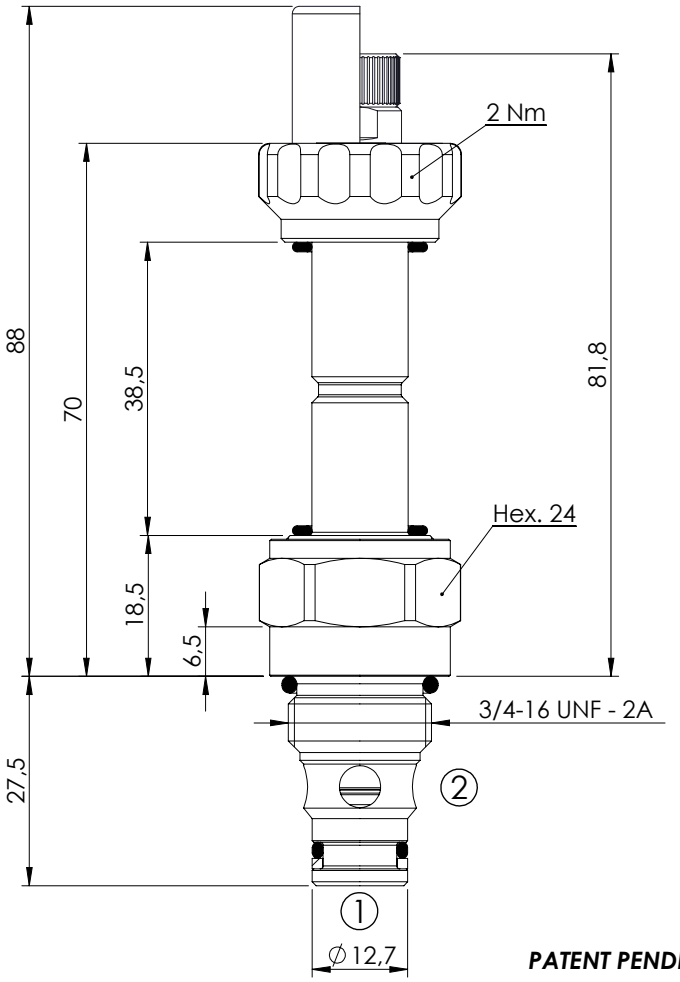

PATENT PENDING

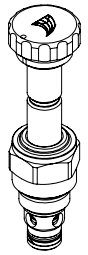

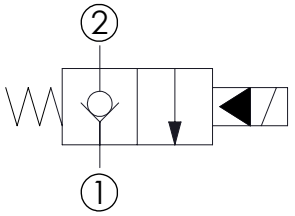

SPECIFICATIONS

Max. operating pressure:	350/500 bar
Rated flow:	40 l/min
Cavity:	SAE-08-2N
Weight:	0,14 kg
Min. voltage required:	90% of nominal
Coil type:	M7 type
Seal kit:	RA900081

NOTES

Installation torque:	45 - 50 Nm

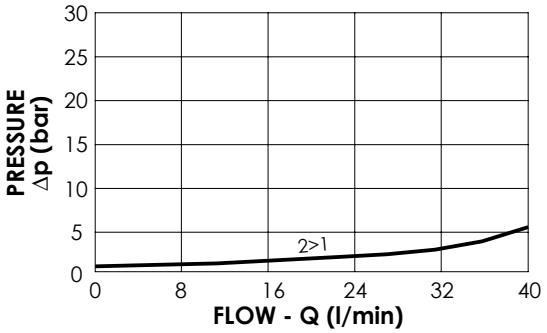

OPTIONS

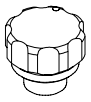

Standard

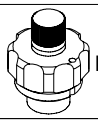

Knob style override

SEALING CAP

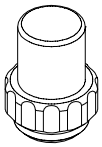

Ordering code: AT000113

ORDERING CODES

Quick code	Description	Options	Max operating pressure (bar)	
CE000210	CEBN-040-NCFN-01-S08-N350	Standard	350	
CE000212	CEBN-040-NCFK-01-S08-N350	Knob style override	350	
CE000510	CEBN-040-NCFN-01-S08-N500	Standard	500	
CE000512	CEBN-040-NCFK-01-S08-N500	Knob style override	500	

SOLENOID OPERATED CARTRIDGE

CEBN-070-NCFN

PILOT OPERATED POPPET TYPE

ATLANTIC Fluid Tech

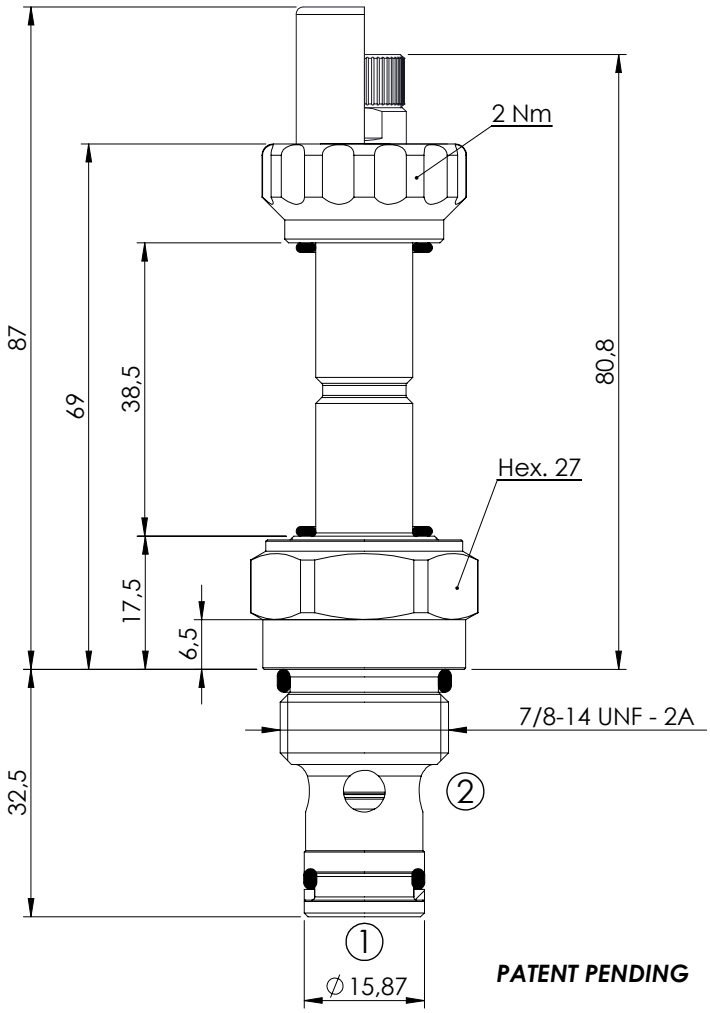

PATENT PENDING

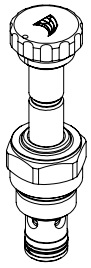

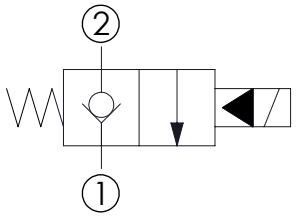

SPECIFICATIONS

Max. operating pressure:	350/500 bar
Rated flow:	70 l/min
Cavity:	SAE-10-2N
Weight:	0,18 kg
Min. voltage required:	90% of nominal
Coil type:	M7 type
Seal kit:	RA900082

NOTES

Installation torque: 55 - 62 Nm

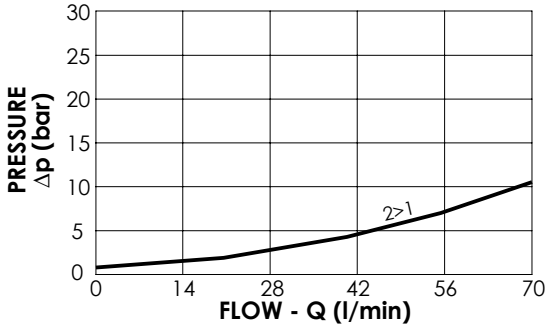

OPTIONS

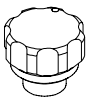

Standard

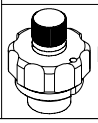

Knob style override

SEALING CAP

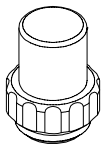

Ordering code: AT000113

ORDERING CODES

Quick code	Description	Options	Max operating pressure (bar)	
CE000245	CEBN-070-NCFN-01-S10-N350	Standard	350	
CE000247	CEBN-070-NCFK-01-S10-N350	Knob style override	350	
CE000545	CEBN-070-NCFN-01-S10-N500	Standard	500	
CE000547	CEBN-070-NCFK-01-S10-N500	Knob style override	500	

SOLENOID OPERATED CARTRIDGE

CEBN-100-NCFN

PILOT OPERATED POPPET TYPE

ATLANTIC Fluid Tech

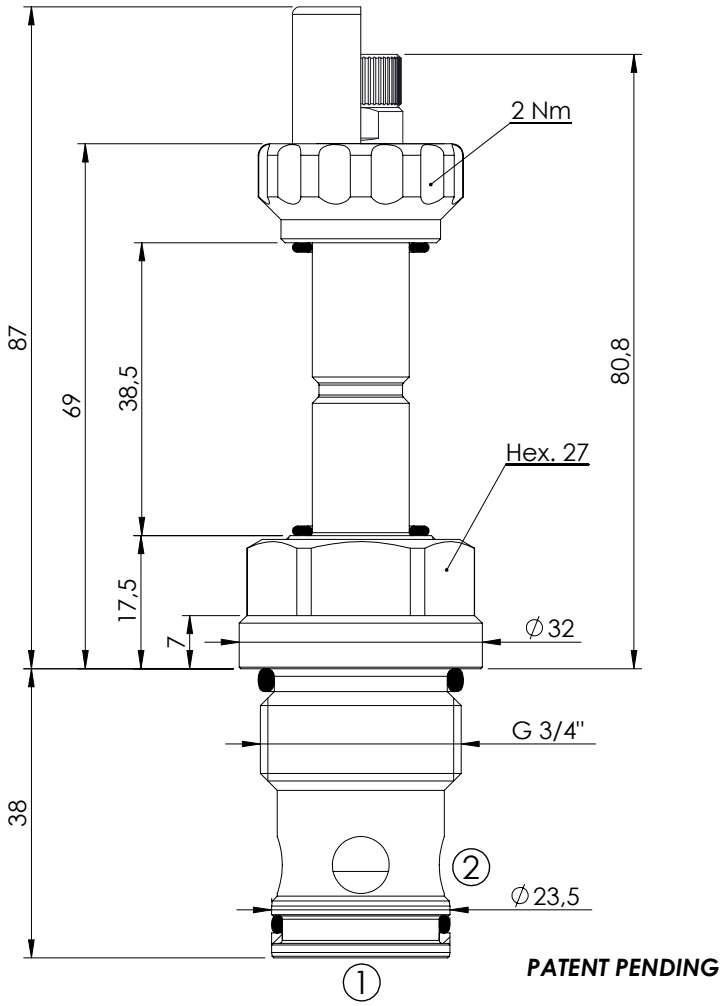

PATENT PENDING

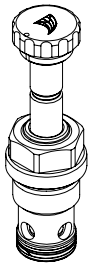

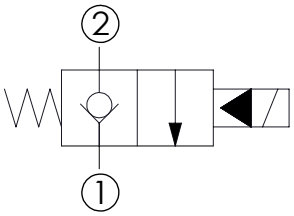

SPECIFICATIONS

Max. operating pressure:	350/500 bar
Rated flow:	100 l/min
Cavity:	VP000057
Weight:	0,25 kg
Min. voltage required:	90% of nominal
Coil type:	M7 type
Seal kit:	RC900057

NOTES

Installation torque: 110 - 130 Nm

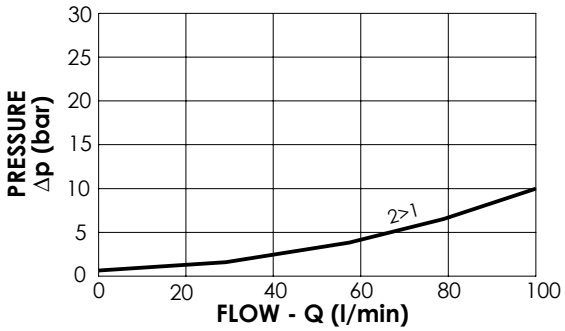

OPTIONS

Standard

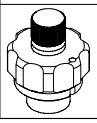

Knob style override

SEALING CAP

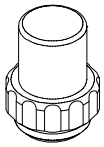

Ordering code: AT000113

ORDERING CODES

Quick code	Description	Options	Max operating pressure (bar)	
CE000280	CEBN-100-NCFN-01-057-N350	Standard	350	
CE000282	CEBN-100-NCFK-01-057-N350	Knob style override	350	
CE000580	CEBN-100-NCFN-01-057-N500	Standard	500	
CE000582	CEBN-100-NCFK-01-057-N500	Knob style override	500	

SOLENOID OPERATED CARTRIDGE

CEBN-180-NCFN

PILOT OPERATED POPPET TYPE

ATLANTIC Fluid Tech

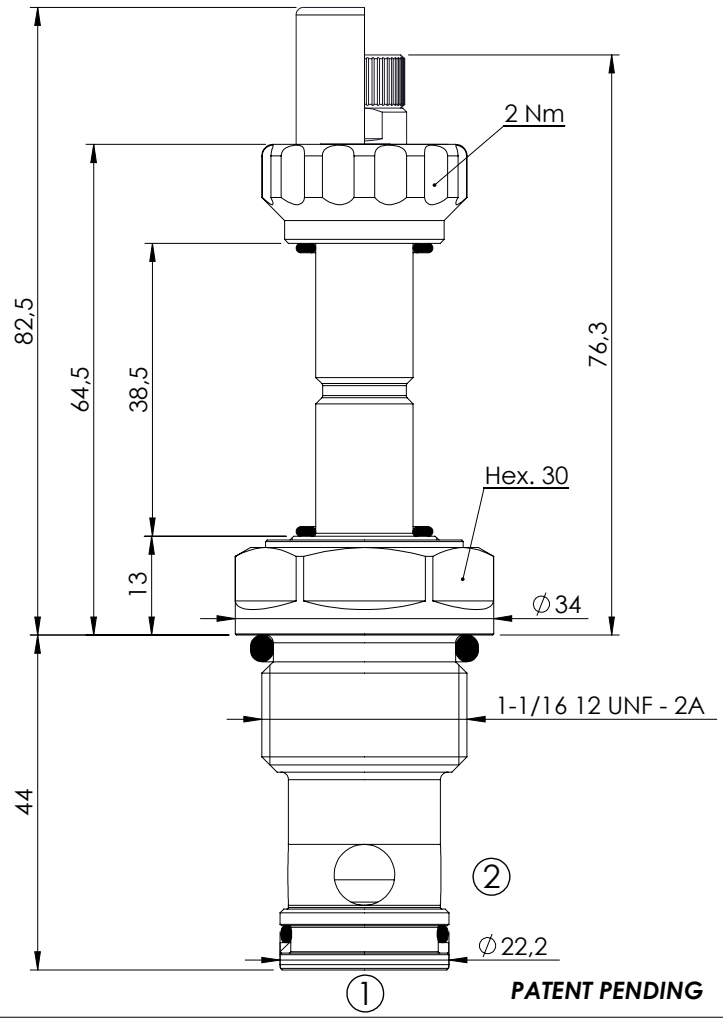

PATENT PENDING

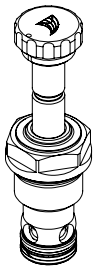

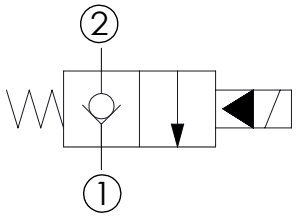

SPECIFICATIONS

Max. operating pressure:	350/500 bar
Rated flow:	180 l/min
Cavity:	SAE-12-2N
Weight:	0,25 kg
Min. voltage required:	90% of nominal
Coil type:	M7 type
Seal kit:	RA900083

NOTES

Installation torque: 135 - 150 Nm

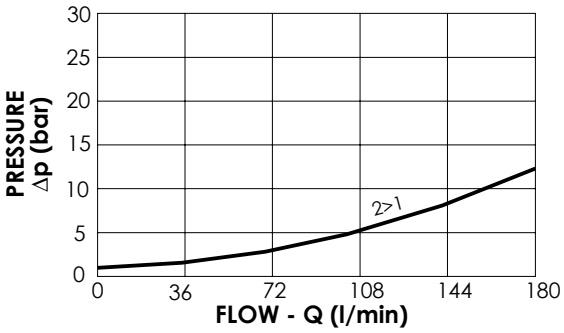

OPTIONS

Standard

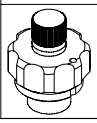

Knob style override

SEALING CAP

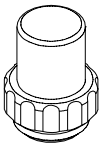

Ordering code: AT000113

ORDERING CODES

Quick code	Description	Options	Max operating pressure (bar)	
CE000315	CEBN-180-NCFN-01-S12-N350	Standard	350	
CE000317	CEBN-180-NCFK-01-S12-N350	Knob style override	350	
CE000615	CEBN-180-NCFN-01-S12-N500	Standard	500	
CE000617	CEBN-180-NCFK-01-S12-N500	Knob style override	500	

SOLENOID OPERATED CARTRIDGE

CEBN-200-NCFN

PILOT OPERATED POPPET TYPE

ATLANTIC Fluid Tech

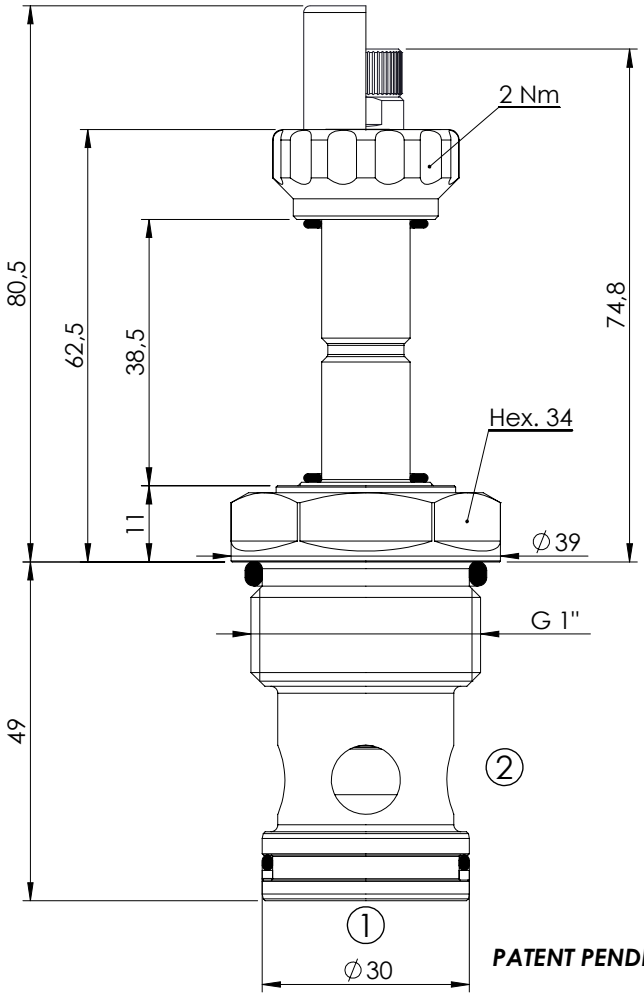

PATENT PENDING

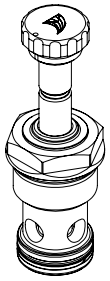

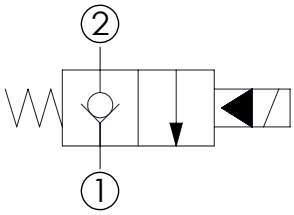

SPECIFICATIONS

Max. operating pressure:	350/500 bar
Rated flow:	200 l/min
Cavity:	VP000013
Weight:	0,35 kg
Min. voltage required:	90% of nominal
Coil type:	M7 type
Seal kit:	RC900013

NOTES

Installation torque: 135 - 150 Nm

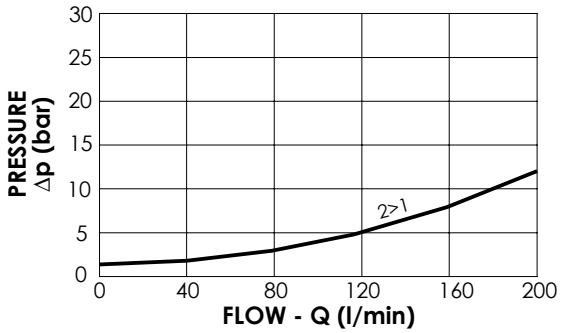

OPTIONS

Standard

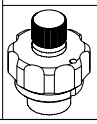

Knob style override

SEALING CAP

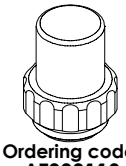

Ordering code: AT000113

ORDERING CODES

Quick code	Description	Options	Max operating pressure (bar)	
CE000350	CEBN-200-NCFN-01-013-N350	Standard	350	
CE000352	CEBN-200-NCFK-01-013-N350	Knob style override	350	
CE000650	CEBN-200-NCFN-01-013-N500	Standard	500	
CE000652	CEBN-200-NCFK-01-013-N500	Knob style override	500	

SOLENOID OPERATED CARTRIDGE

CEBN-300-NCFN

PILOT OPERATED POPPET TYPE

ATLANTIC Fluid Tech

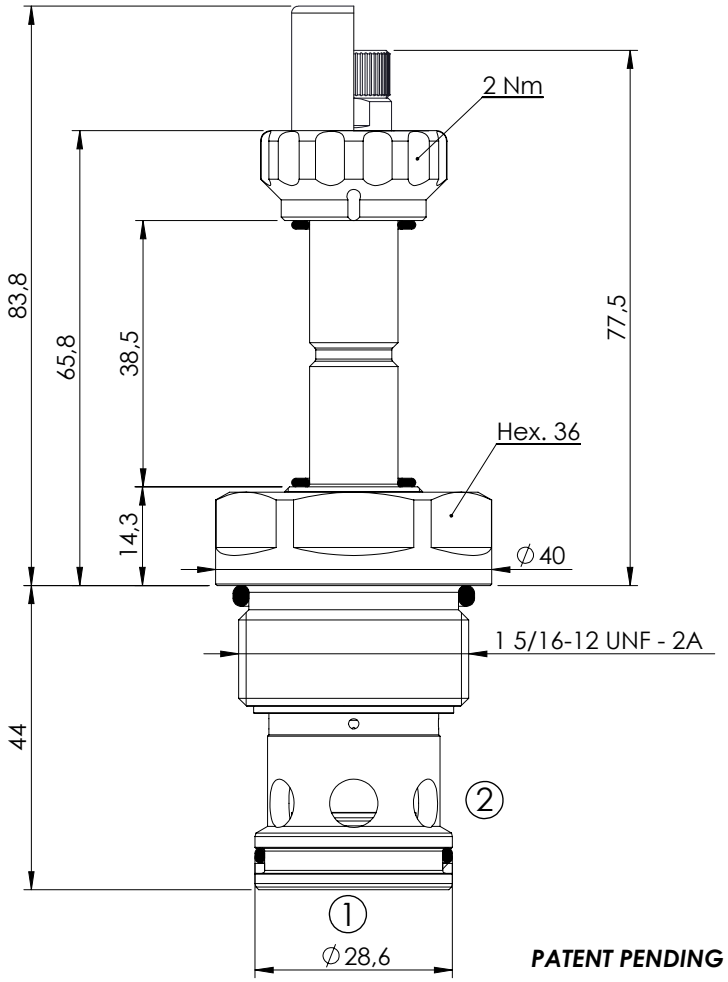

PATENT PENDING

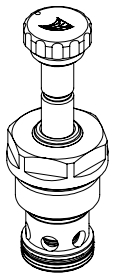

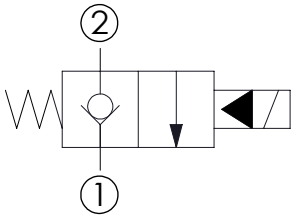

SPECIFICATIONS

Max. operating pressure:	350/500 bar
Rated flow:	300 l/min
Cavity:	SAE-16-2N
Weight:	0,36 kg
Min. voltage required:	90% of nominal
Coil type:	M7 type
Seal kit:	RA900084

NOTES

Installation torque:	118 - 132 Nm

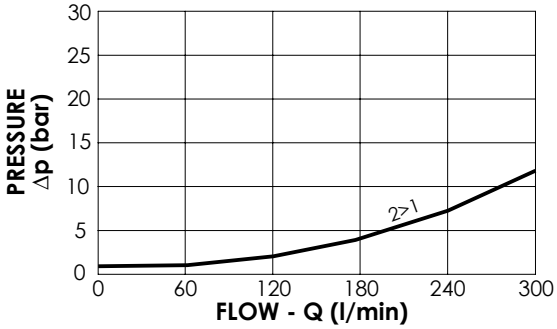

OPTIONS

Standard

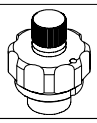

Knob style override

SEALING CAP

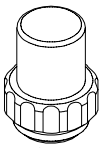

Ordering code: AT000113

ORDERING CODES

Quick code	Description	Options	Max operating pressure (bar)	
CE000385	CEBN-300-NCFN-01-S16-N350	Standard	350	
CE000387	CEBN-300-NCFK-01-S16-N350	Knob style override	350	
CE000685	CEBN-300-NCFN-01-S16-N500	Standard	500	
CE000687	CEBN-300-NCFK-01-S16-N500	Knob style override	500	

SOLENOID OPERATED CARTRIDGE

CEBN-030-NCFN

PILOT OPERATED POPPET TYPE

ATLANTIC Fluid Tech

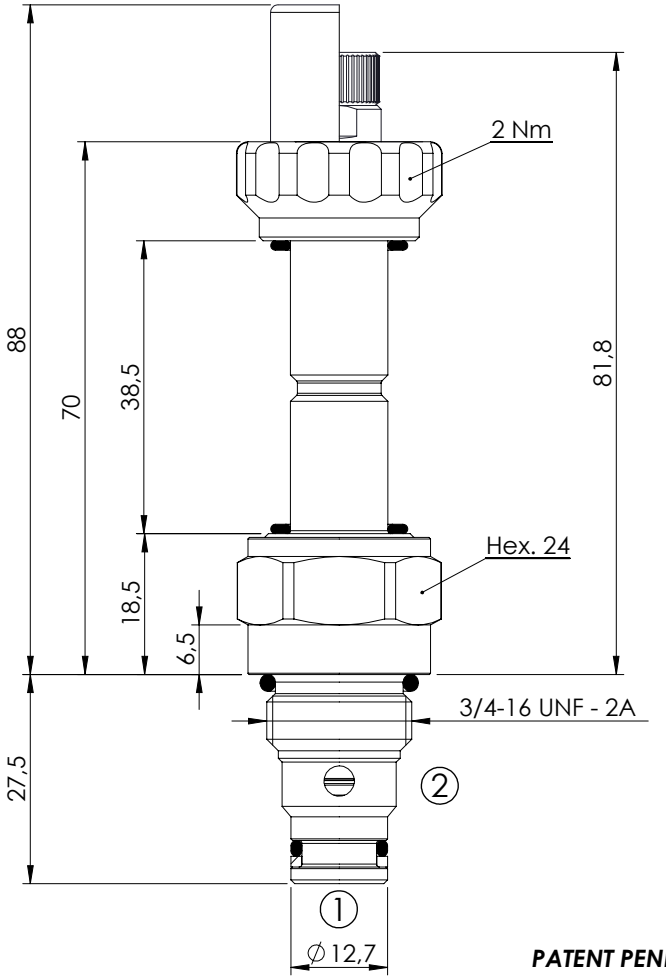

PATENT PENDING

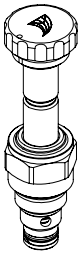

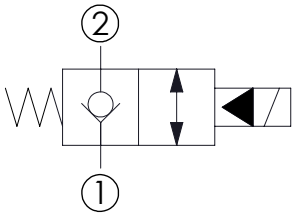

SPECIFICATIONS

Max. operating pressure:	350 bar
Rated flow:	30 l/min
Cavity:	SAE-08-2N
Weight:	0,15 kg
Min. voltage required:	90% of nominal
Coil type:	M7 type
Seal kit:	RA900081

NOTES

Installation torque:	45 - 50 Nm

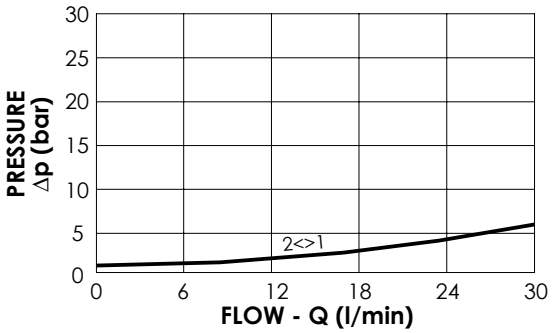

OPTIONS

Standard

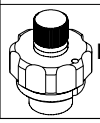

Knob style override

SEALING CAP

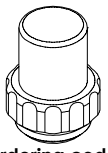

Ordering code:
AT000113

ORDERING CODES

Quick code	Description	Options	Max operating pressure (bar)	
CE000457	CEBN-030-NCFN-05-S08-N350	Standard	350	
CE000458	CEBN-030-NCFK-05-S08-N350	Knob style override	350	

SOLENOID OPERATED CARTRIDGE

CEBN-040-NCFN

PILOT OPERATED POPPET TYPE

ATLANTIC Fluid Tech

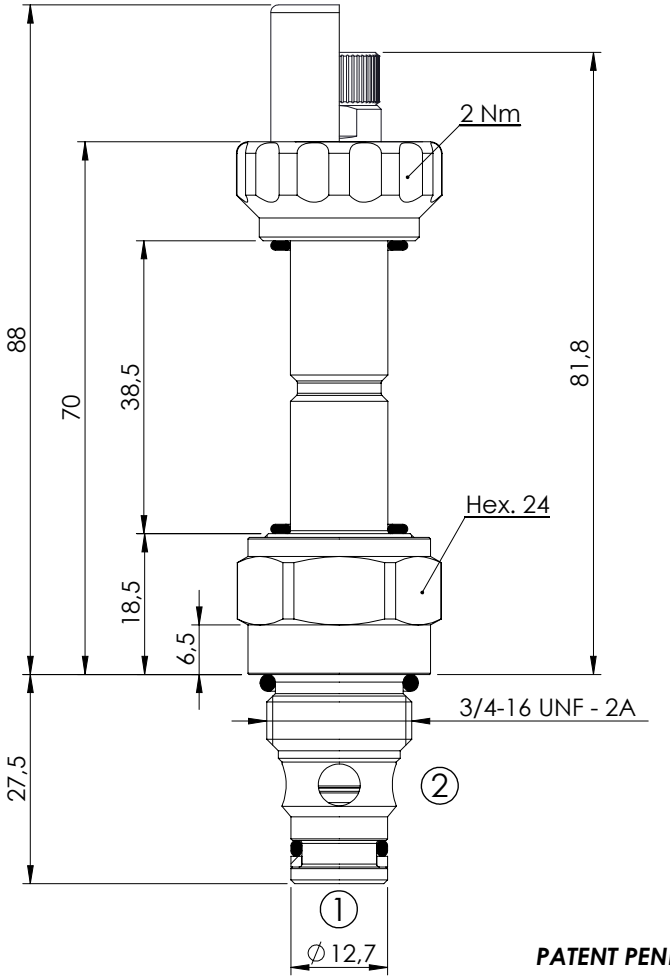

PATENT PENDING

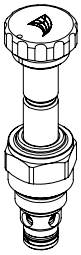

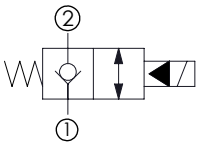

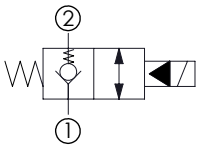

With extra spring

SPECIFICATIONS

Max. operating pressure:	350/500 bar
Rated flow:	40 l/min
Cavity:	SAE-08-2N
Weight:	0,14 kg
Min. voltage required:	90% of nominal
Coil type:	M7 type
Seal kit:	RA900081

NOTES

Installation torque:	45 - 50 Nm

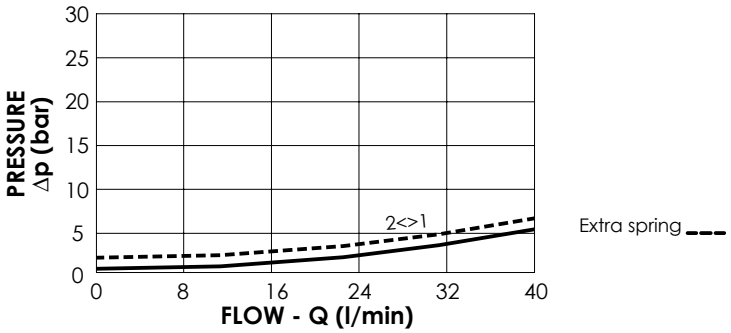

OPTIONS

Standard

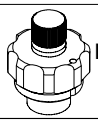

Knob style override

SEALING CAP

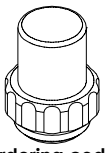

Ordering code: AT000113

ORDERING CODES

Quick code	Description	Options	Max operating pressure (bar)	Extra Spring
CE000218	CEBN-040-NCFN-05-S08-N350	Standard	350	No
CE000220	CEBN-040-NCFK-05-S08-N350	Knob style override	350	No
CE000219	CEBN-040-XCFN-05-S08-N350	Standard	350	Yes
CE000221	CEBN-040-XCFK-05-S08-N350	Knob style override	350	Yes
CE000518	CEBN-040-NCFN-05-S08-N500	Standard	500	No
CE000520	CEBN-040-NCFK-05-S08-N500	Knob style override	500	No

SOLENOID OPERATED CARTRIDGE

CEBN-070-NCFN

PILOT OPERATED POPPET TYPE

ATLANTIC Fluid Tech

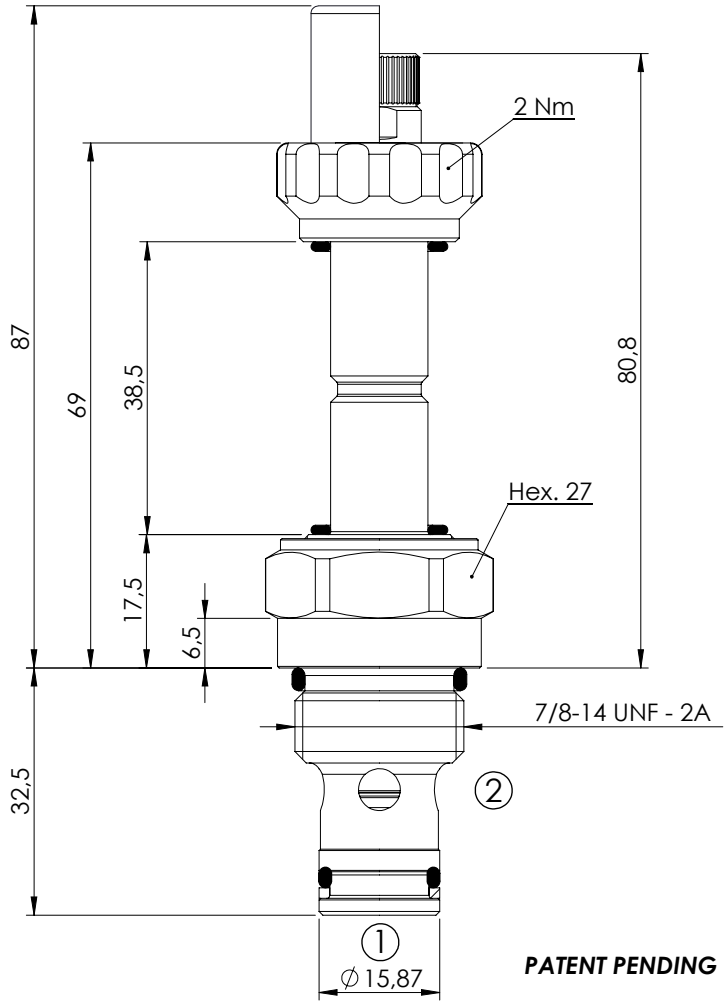

PATENT PENDING

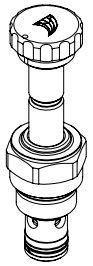

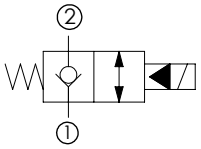

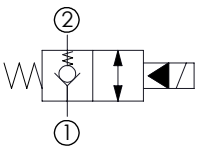

With extra spring

SPECIFICATIONS

Max. operating pressure:	350/500 bar
Rated flow:	70 l/min
Cavity:	SAE-10-2N
Weight:	0,18 kg
Min. voltage required:	90% of nominal
Coil type:	M7 type
Seal kit:	RA900082

NOTES

Installation torque:	55 - 62 Nm

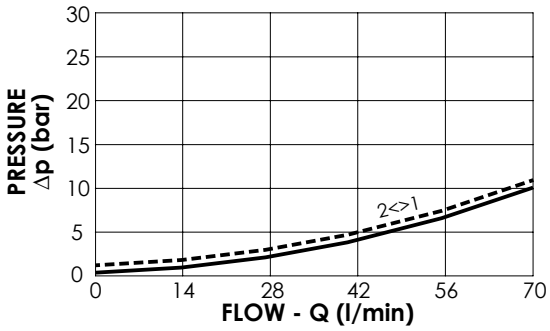

Extra spring - - - - -

OPTIONS

Standard

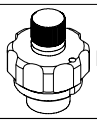

Knob style override

SEALING CAP

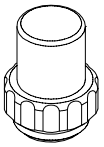

Ordering code: AT000113

ORDERING CODES

Quick code	Description	Options	Max operating pressure (bar)	Extra Spring
CE000253	CEBN-070-NCFN-05-S10-N350	Standard	350	No
CE000255	CEBN-070-NCFK-05-S10-N350	Knob style override	350	No
CE000254	CEBN-070-XCFN-05-S10-N350	Standard	350	Yes
CE000256	CEBN-070-XCFK-05-S10-N350	Knob style override	350	Yes
CE000553	CEBN-070-NCFN-05-S10-N500	Standard	500	No
CE000555	CEBN-070-NCFK-05-S10-N500	Knob style override	500	No

SOLENOID OPERATED CARTRIDGE

CEBN-100-NCFN

PILOT OPERATED POPPET TYPE

ATLANTIC Fluid Tech

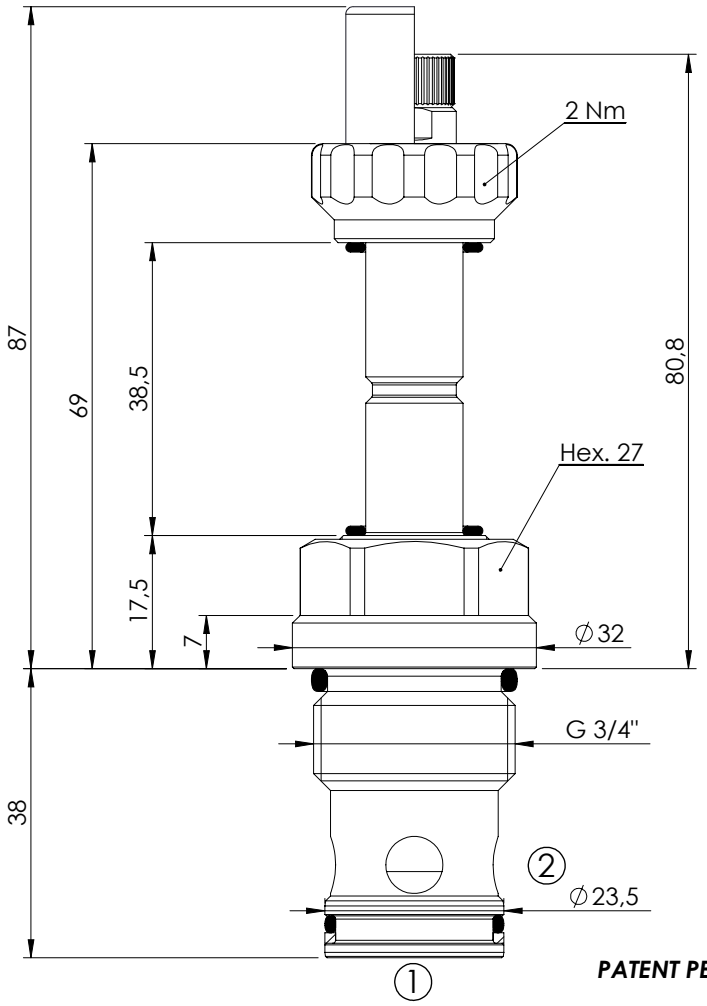

PATENT PENDING

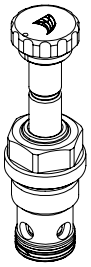

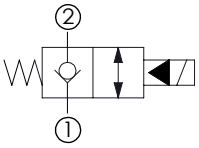

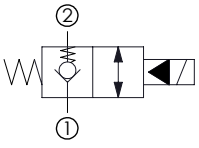

With extra spring

SPECIFICATIONS

Max. operating pressure:	350/500 bar
Rated flow:	100 l/min
Cavity:	VP000057
Weight:	0,25 kg
Min. voltage required:	90% of nominal
Coil type:	M7 type
Seal kit:	RC900057

NOTES

Installation torque: 110 - 130 Nm

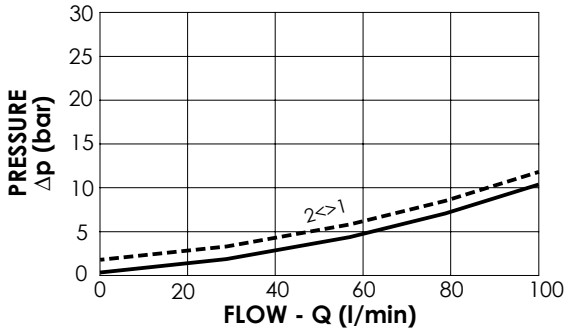

Extra spring ---

OPTIONS

Standard

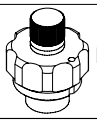

Knob style override

SEALING CAP

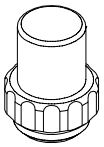

Ordering code: AT000113

ORDERING CODES

Quick code	Description	Options	Max operating pressure (bar)	Extra Spring
CE000288	CEBN-100-NCFN-05-057-N350	Standard	350	No
CE000290	CEBN-100-NCFK-05-057-N350	Knob style override	350	No
CE000289	CEBN-100-XCFN-05-057-N350	Standard	350	Yes
CE000291	CEBN-100-XCFK-05-057-N350	Knob style override	350	Yes
CE000588	CEBN-100-NCFN-05-057-N500	Standard	500	No
CE000590	CEBN-100-NCFK-05-057-N500	Knob style override	500	No

SOLENOID OPERATED CARTRIDGE

CEBN-180-NCFN

PILOT OPERATED POPPET TYPE

ATLANTIC Fluid Tech

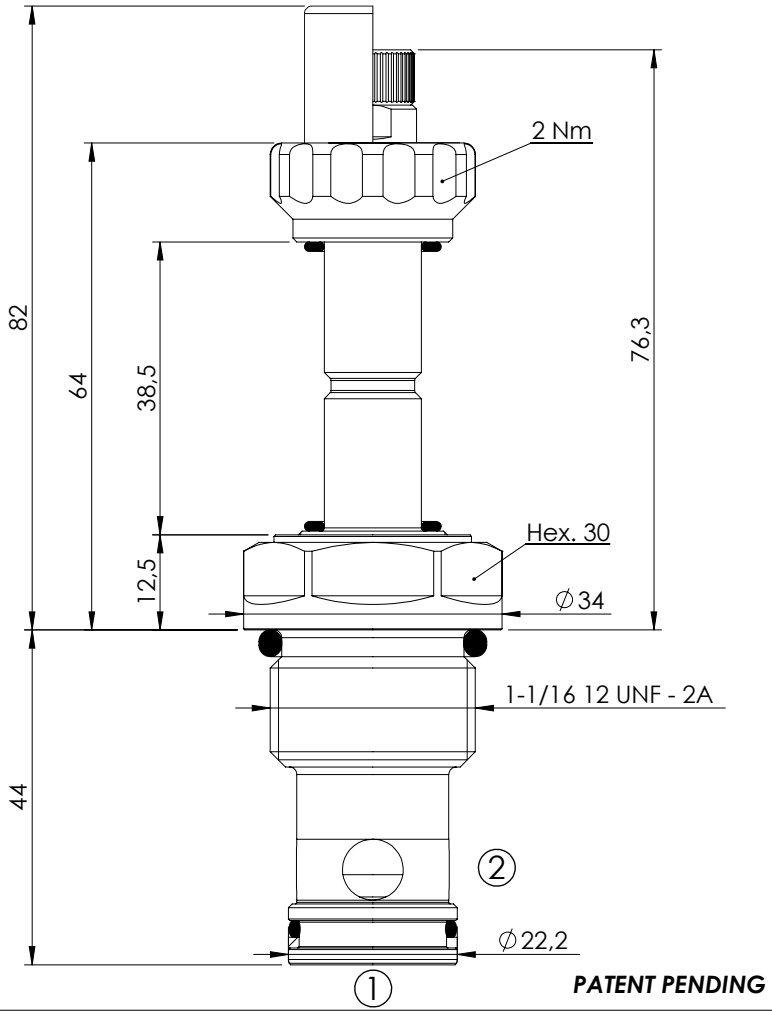

PATENT PENDING

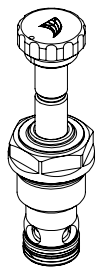

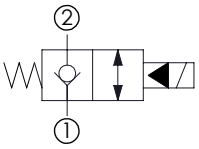

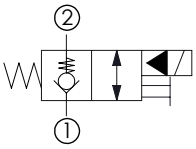

With extra spring

SPECIFICATIONS

Max. operating pressure:	350/500 bar
Rated flow:	180 l/min
Cavity:	SAE-12-2N
Weight:	0,25 kg
Min. voltage required:	90% of nominal
Coil type:	M7 type
Seal kit:	RA900083

NOTES

Installation torque: 135 - 150 Nm

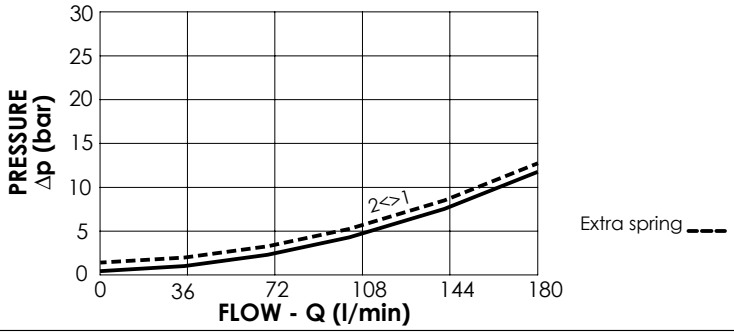

OPTIONS

Standard

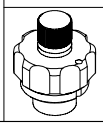

Knob style override

SEALING CAP

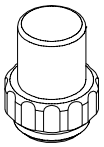

Ordering code: AT000113

ORDERING CODES

Quick code	Description	Options	Max operating pressure (bar)	Extra Spring
CE000323	CEBN-180-NCFN-05-S12-N350	Standard	350	No
CE000325	CEBN-180-NCFK-05-S12-N350	Knob style override	350	No
CE000324	CEBN-180-XCFN-05-S12-N350	Standard	350	Yes
CE000326	CEBN-180-XCFK-05-S12-N350	Knob style override	350	Yes
CE000623	CEBN-180-NCFN-05-S12-N500	Standard	500	No
CE000625	CEBN-180-NCFK-05-S12-N500	Knob style override	500	No

SOLENOID OPERATED CARTRIDGE

CEBN-200-NCFN

PILOT OPERATED POPPET TYPE

ATLANTIC Fluid Tech

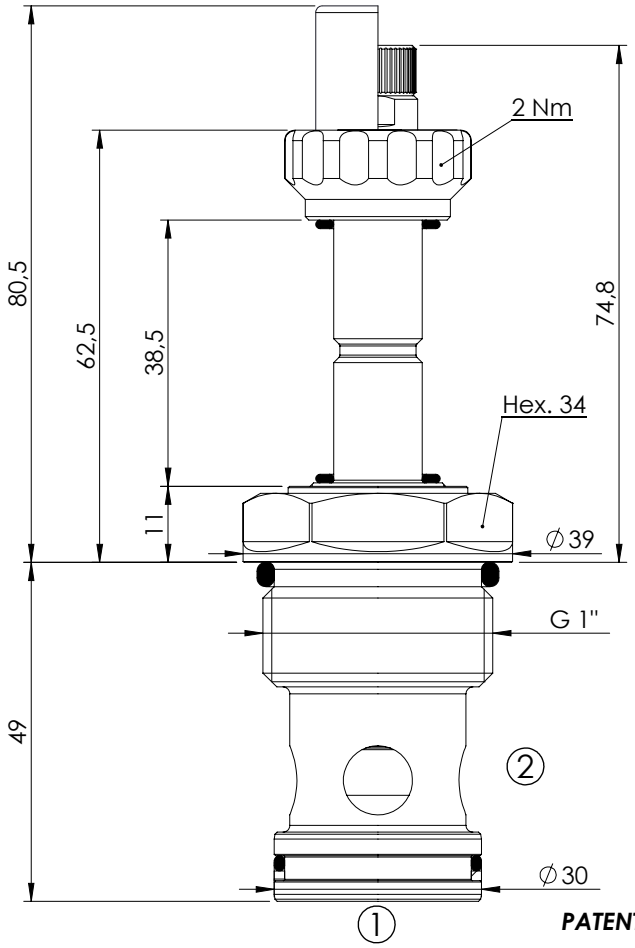

PATENT PENDING

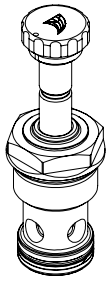

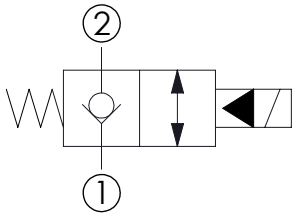

SPECIFICATIONS

Max. operating pressure:	350/500 bar
Rated flow:	200 l/min
Cavity:	VP000013
Weight:	0,35 kg
Min. voltage required:	90% of nominal
Coil type:	M7 type
Seal kit:	RC900013

NOTES

Installation torque: 135 - 150 Nm

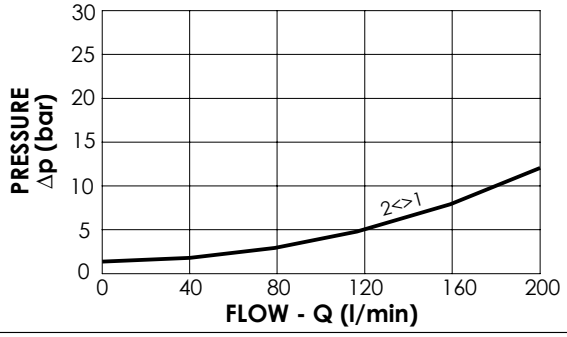

OPTIONS

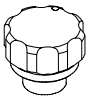

Standard

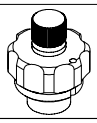

Knob style override

SEALING CAP

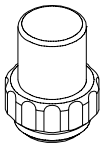

Ordering code: AT000113

ORDERING CODES

Quick code	Description	Options	Max operating pressure (bar)	
CE000358	CEBN-200-NCFN-05-013-N350	Standard	350	
CE000360	CEBN-200-NCFK-05-013-N350	Knob style override	350	
CE000658	CEBN-200-NCFN-05-013-N500	Standard	500	
CE000660	CEBN-200-NCFK-05-013-N500	Knob style override	500	

SOLENOID OPERATED CARTRIDGE

CEBN-300-NCFN

PILOT OPERATED POPPET TYPE

ATLANTIC Fluid Tech

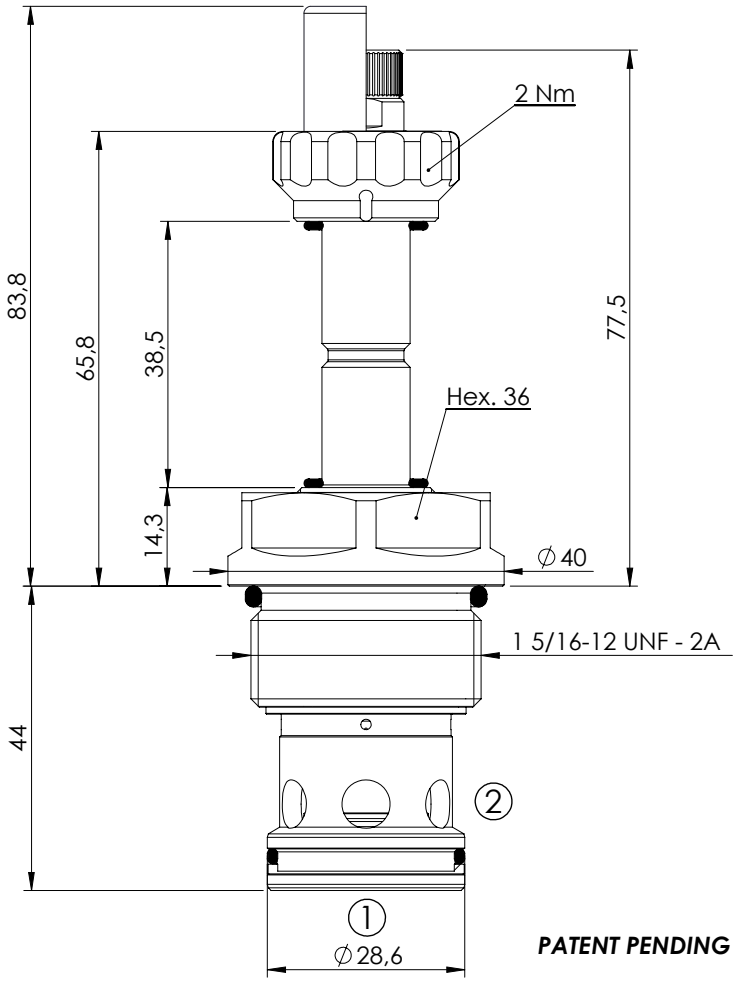

PATENT PENDING

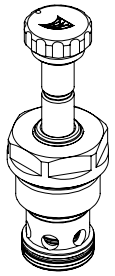

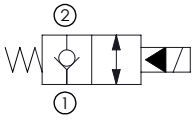

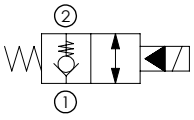

With extra spring

SPECIFICATIONS

Max. operating pressure:	350/500 bar
Rated flow:	300 l/min
Cavity:	SAE-16-2N
Weight:	0,36 kg
Min. voltage required:	90% of nominal
Coil type:	M7 type
Seal kit:	RA900084

NOTES

Installation torque: 118 - 132 Nm

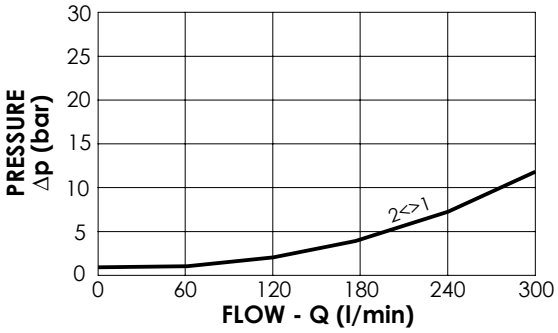

OPTIONS

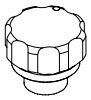

Standard

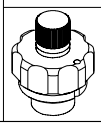

Knob style override

SEALING CAP

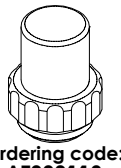

Ordering code: AT000113

ORDERING CODES

Quick code	Description	Options	Max operating pressure (bar)	Extra Spring
CE000393	CEBN-300-NCFN-05-S16-N350	Standard	350	No
CE000395	CEBN-300-NCFK-05-S16-N350	Knob style override	350	No
CE000394	CEBN-300-XCFN-05-S16-N350	Standard	350	Yes
CE000396	CEBN-300-XCFK-05-S16-N350	Knob style override	350	Yes
CE000693	CEBN-300-NCFN-05-S16-N500	Standard	500	No
CE000695	CEBN-300-NCFK-05-S16-N500	Knob style override	500	No

SOLENOID OPERATED CARTRIDGE

CEBN-040-NCFN

PILOT OPERATED POPPET TYPE

ATLANTIC Fluid Tech

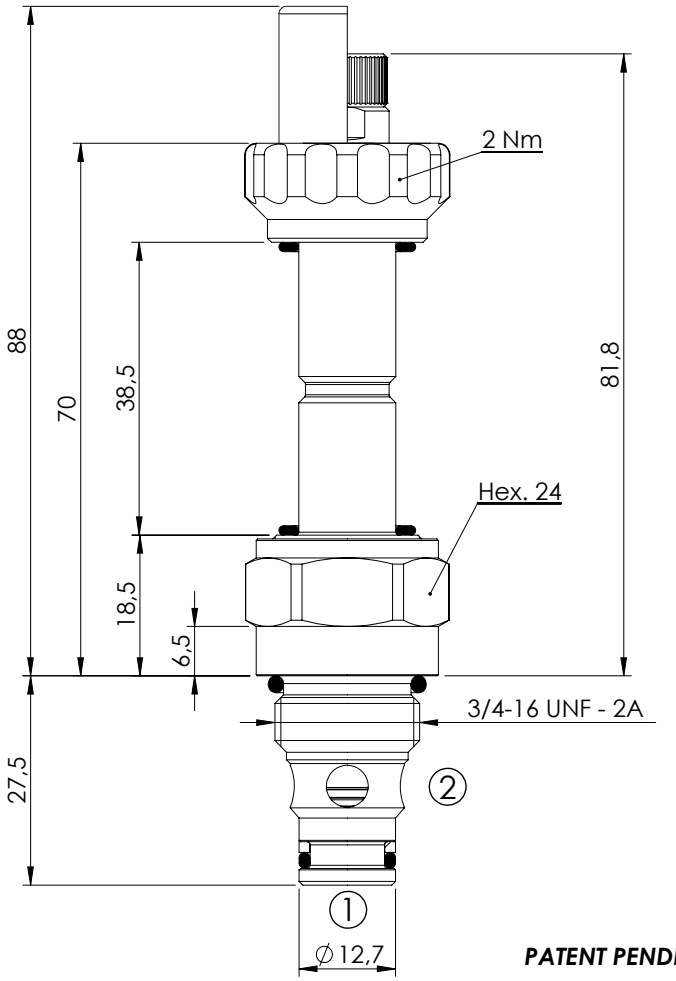

PATENT PENDING

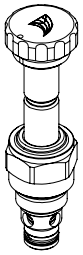

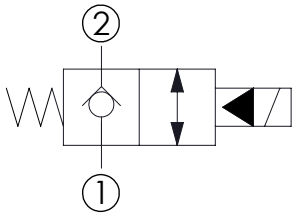

SPECIFICATIONS

Max. operating pressure:	350/500 bar
Rated flow:	40 l/min
Cavity:	SAE-08-2N
Weight:	0,14 kg
Min. voltage required:	90% of nominal
Coil type:	M7 type
Seal kit:	RA900081

NOTES

Installation torque:	45 - 50 Nm

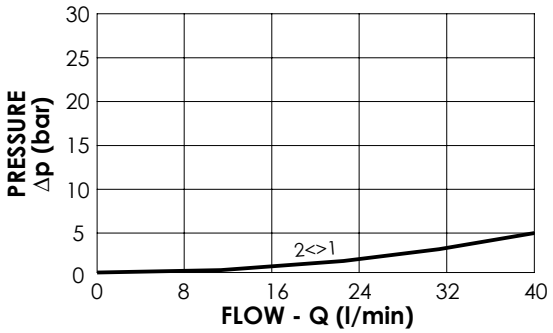

OPTIONS

Standard

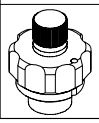

Knob style override

SEALING CAP

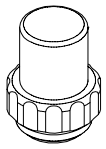

Ordering code: AT000113

ORDERING CODES

Quick code	Description	Options	Max operating pressure (bar)	
CE000214	CEBN-040-NCFN-03-S08-N350	Standard	350	
CE000216	CEBN-040-NCFK-03-S08-N350	Knob style override	350	
CE000514	CEBN-040-NCFN-03-S08-N500	Standard	500	
CE000516	CEBN-040-NCFK-03-S08-N500	Knob style override	500	

SOLENOID OPERATED CARTRIDGE

CEBN-070-NCFN

PILOT OPERATED POPPET TYPE

ATLANTIC Fluid Tech

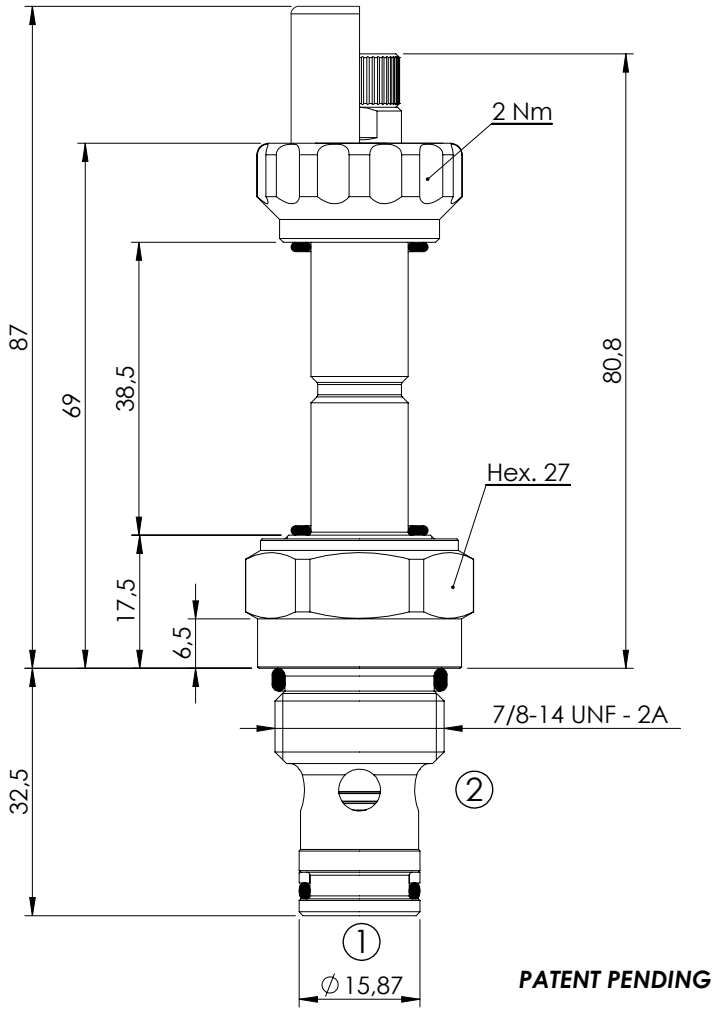

PATENT PENDING

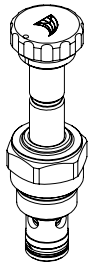

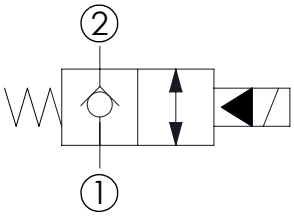

SPECIFICATIONS

Max. operating pressure:	350/500 bar
Rated flow:	70 l/min
Cavity:	SAE-10-2N
Weight:	0,18 kg
Min. voltage required:	90% of nominal
Coil type:	M7 type
Seal kit:	RA900082

NOTES

Installation torque:	55 - 62 Nm

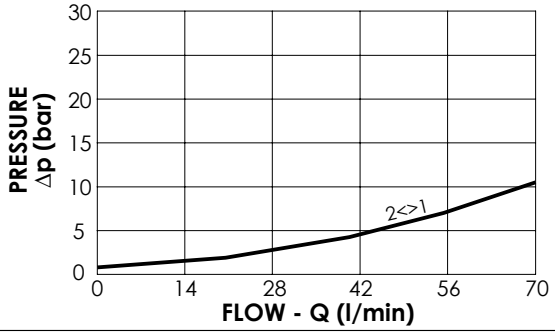

OPTIONS

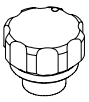

Standard

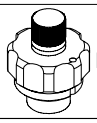

Knob style override

SEALING CAP

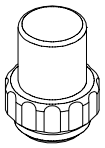

Ordering code: AT000113

ORDERING CODES

Quick code	Description	Options	Max operating pressure (bar)	
CE000249	CEBN-070-NCFN-03-S10-N350	Standard	350	
CE000251	CEBN-070-NCFK-03-S10-N350	Knob style override	350	
CE000549	CEBN-070-NCFN-03-S10-N500	Standard	500	
CE000551	CEBN-070-NCFK-03-S10-N500	Knob style override	500	

SOLENOID OPERATED CARTRIDGE

CEBN-100-NCFN

PILOT OPERATED POPPET TYPE

ATLANTIC Fluid Tech

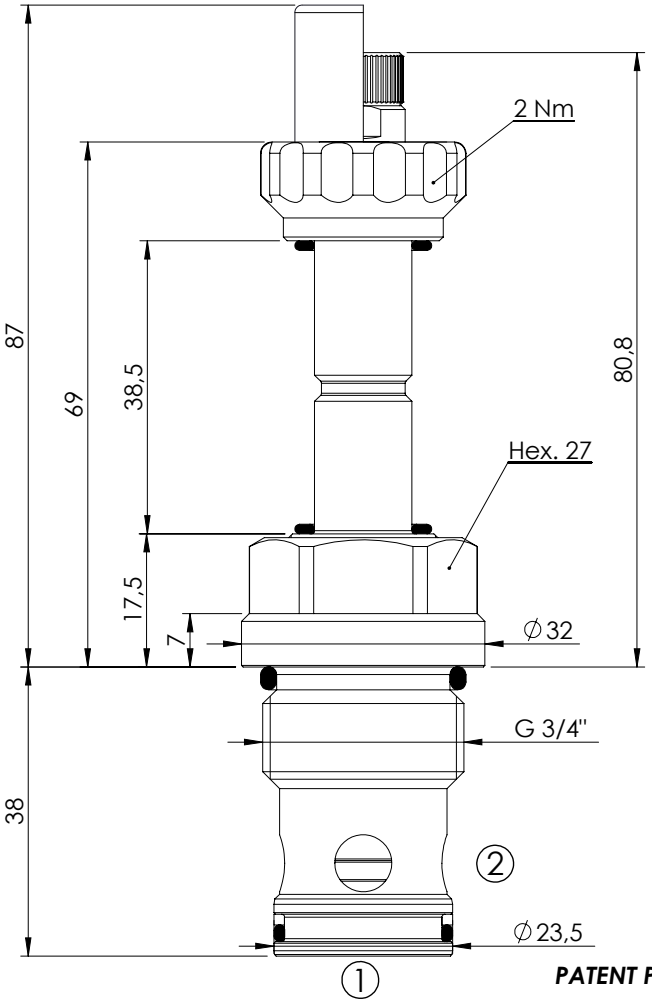

PATENT PENDING

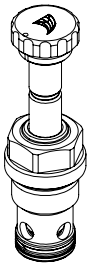

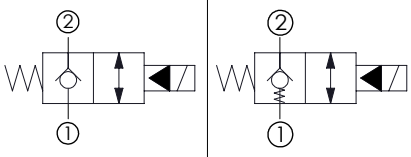

With extra spring

SPECIFICATIONS

Max. operating pressure:	350/500 bar
Rated flow:	100 l/min
Cavity:	VP000057
Weight:	0,25 kg
Min. voltage required:	90% of nominal
Coil type:	M7 type
Seal kit:	RC900057

NOTES

Installation torque: 110 - 130 Nm

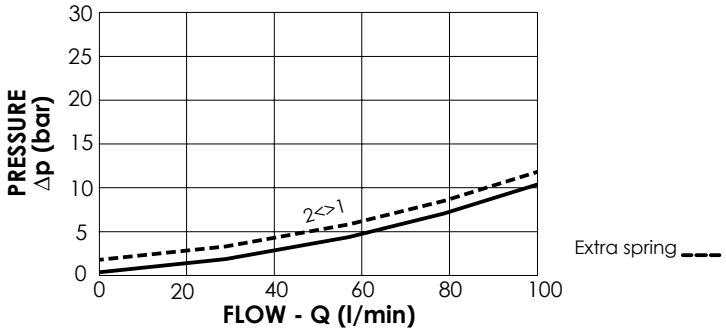

OPTIONS

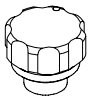

Standard

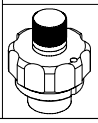

Knob style override

SEALING CAP

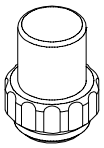

Ordering code: AT000113

ORDERING CODES

Quick code	Description	Options	Max operating pressure (bar)	Extra Spring
CE000284	CEBN-100-NCFN-03-057-N350	Standard	350	No
CE000286	CEBN-100-NCFK-03-057-N350	Knob style override	350	No
CE000584	CEBN-100-NCFN-03-057-N500	Standard	500	No
CE000586	CEBN-100-NCFK-03-057-N500	Knob style override	500	No
CE000585	CEBN-100-XCFN-03-057-N500	Standard	500	Yes
CE000587	CEBN-100-XCFK-03-057-N500	Knob style override	500	Yes

SOLENOID OPERATED CARTRIDGE

CEBN-200-NCFN

PILOT OPERATED POPPET TYPE

ATLANTIC Fluid Tech

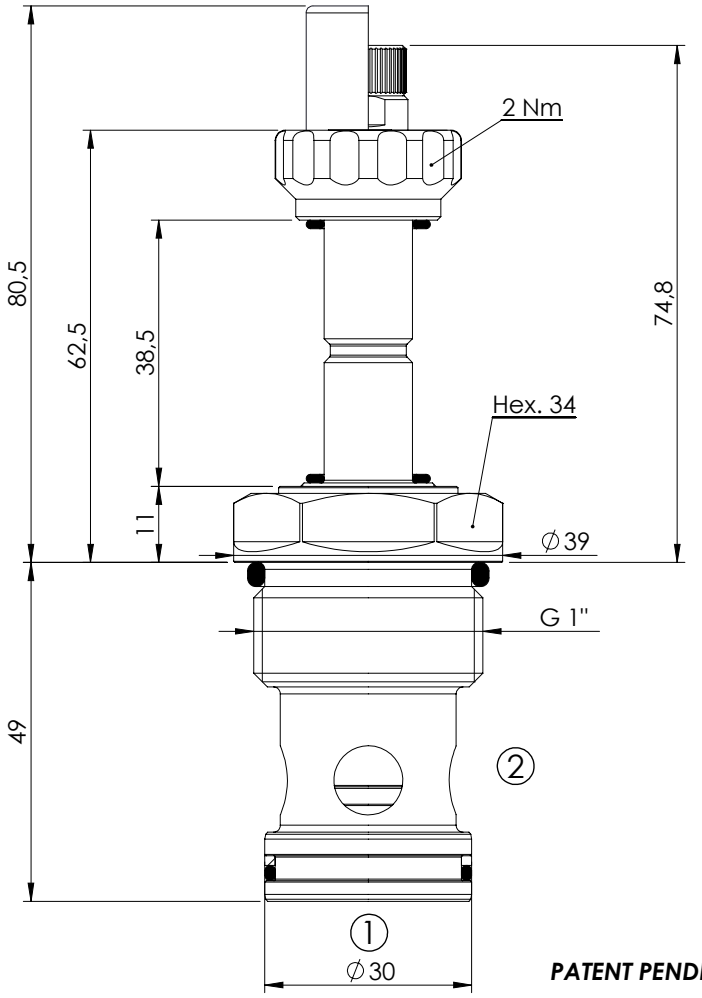

PATENT PENDING

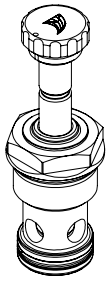

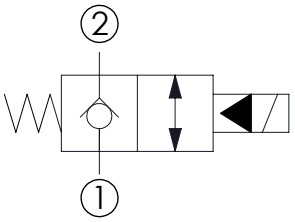

SPECIFICATIONS

Max. operating pressure:	350 bar
Rated flow:	200 l/min
Cavity:	VP000013
Weight:	0,35 kg
Min. voltage required:	90% of nominal
Coil type:	M7 type
Seal kit:	RC900013

NOTES

Installation torque:	135 - 150 Nm

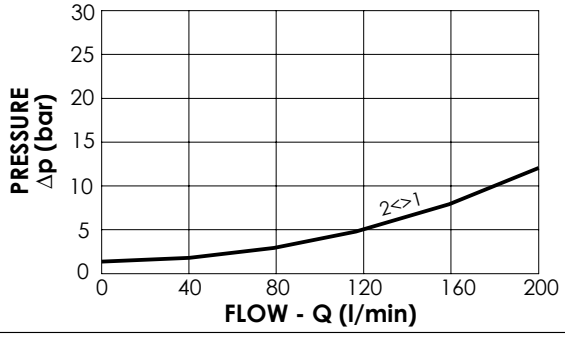

OPTIONS

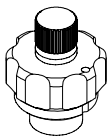

Knob style override

SEALING CAP

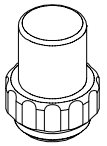

Ordering code: AT000113

ORDERING CODES

Quick code	Description	Options	Max operating pressure (bar)	
CE000354	CEBN-200-NCFN-03-013-N350	Standard	350	
CE000356	CEBN-200-NCFK-03-013-N350	Knob style override	350	
CE000654	CEBN-200-NCFN-03-013-N500	Standard	500	
CE000656	CEBN-200-NCFK-03-013-N500	Knob style override	500	

SOLENOID OPERATED CARTRIDGE

CEBN-300-NCFN

PILOT OPERATED POPPET TYPE

ATLANTIC Fluid Tech

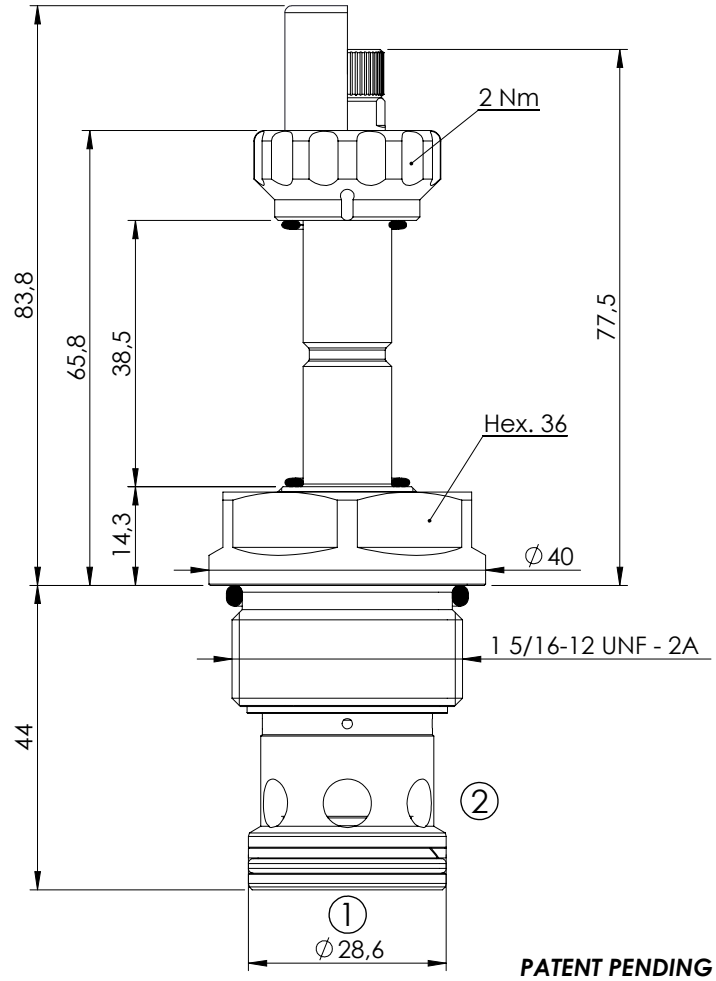

PATENT PENDING

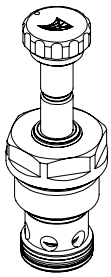

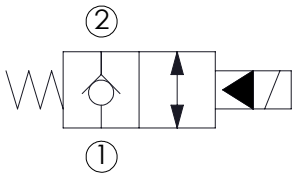

SPECIFICATIONS

Max. operating pressure:	350/500 bar
Rated flow:	300 l/min
Cavity:	SAE-16-2N
Weight:	0,37 kg
Min. voltage required:	90% of nominal
Coil type:	M7 type
Seal kit:	RA700084

NOTES

Installation torque:	118 - 132 Nm

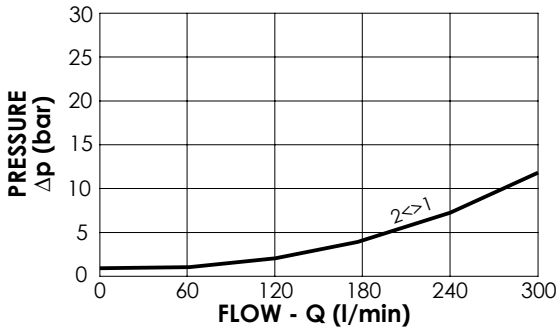

OPTIONS

Standard

Knob style override

SEALING CAP

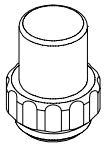

Ordering code:
AT000113

ORDERING CODES

Quick code	Description	Options	Max operating pressure (bar)	
CE000389	CEBN-300-NCFN-03-S16-N350	Standard	350	
CE000391	CEBN-300-NCFK-03-S16-N350	Knob style override	350	
CE000689	CEBN-300-NCFN-03-S16-N500	Standard	500	
CE000691	CEBN-300-NCFK-03-S16-N500	Knob style override	500	

SOLENOID OPERATED CARTRIDGE

CEBN-030-NAFN

PILOT OPERATED POPPET TYPE

ATLANTIC Fluid Tech

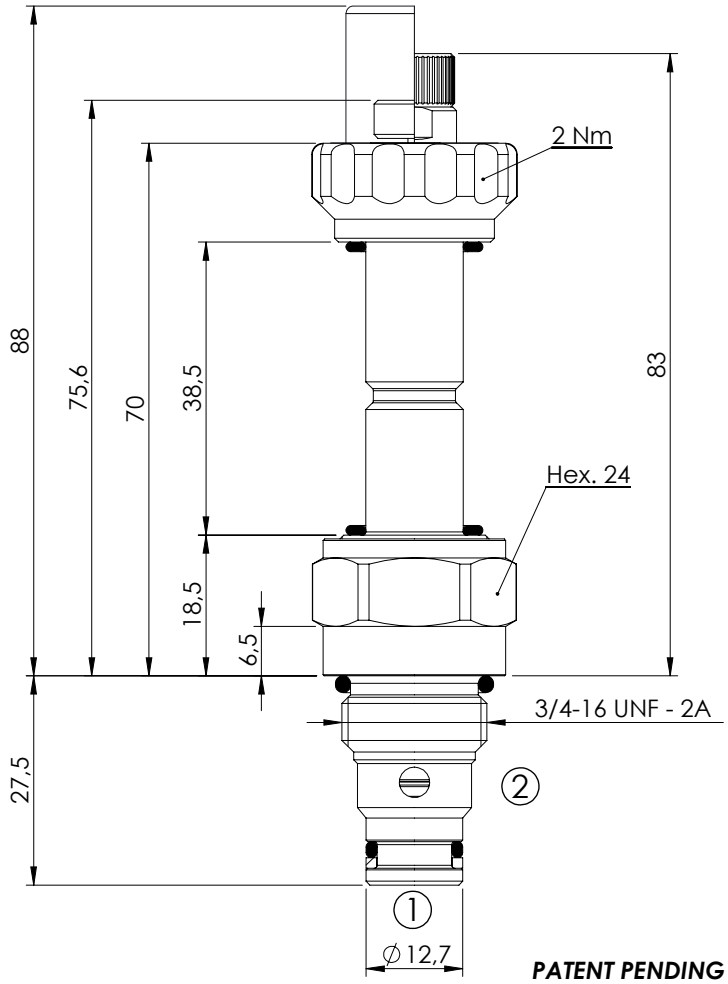

PATENT PENDING

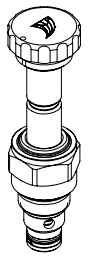

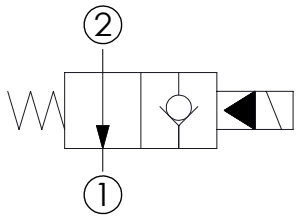

SPECIFICATIONS

Max. operating pressure:	350 bar
Rated flow:	30 l/min
Cavity:	SAE-08-2N
Weight:	0,15 kg
Min. voltage required:	90% of nominal
Coil type:	M7 type
Seal kit:	RA900081

NOTES

Installation torque:	45 - 50 Nm

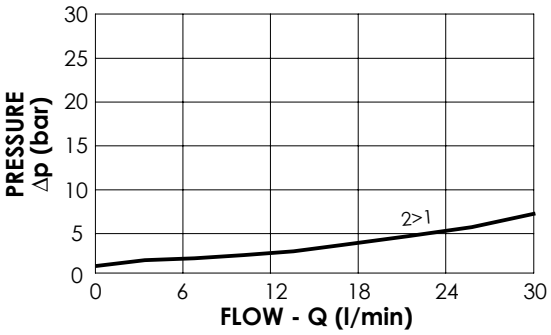

OPTIONS

Standard

Push style override

Knob style override

SEALING CAP

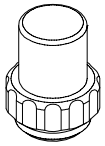

Ordering code: AT000113

ORDERING CODES

Quick code	Description	Options	Max operating pressure (bar)	
CE000461	CEBN-030-NAFN-02-S08-N350	Standard	350	
CE000462	CEBN-030-NAFP-02-S08-N350	Push style override	350	
CE000463	CEBN-030-NAFK-02-S08-N350	Knob style override	350	

SOLENOID OPERATED CARTRIDGE

CEBN-040-NAFN

PILOT OPERATED POPPET TYPE

ATLANTIC Fluid Tech

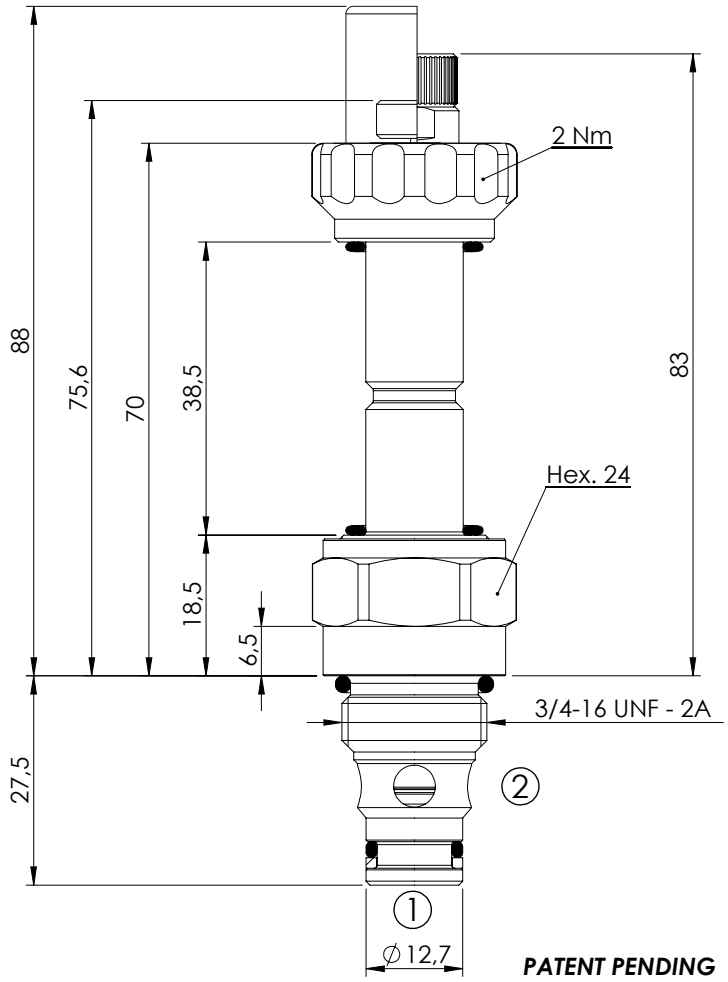

PATENT PENDING

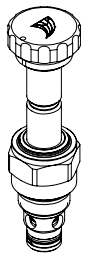

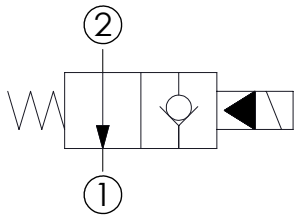

SPECIFICATIONS

Max. operating pressure:	350/500 bar
Rated flow:	40 l/min
Cavity:	SAE-08-2N
Weight:	0,14 kg
Min. voltage required:	90% of nominal
Coil type:	M7 type
Seal kit:	RA900081

NOTES

Installation torque:	45 - 50 Nm

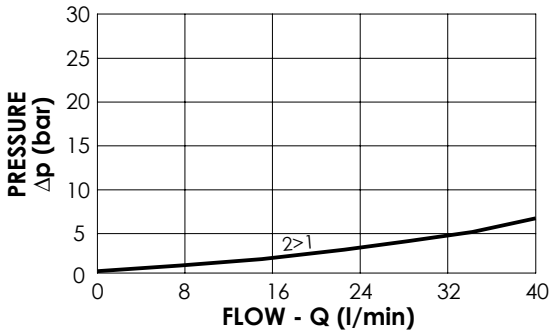

OPTIONS

Standard

Push style override

Knob style override

SEALING CAP

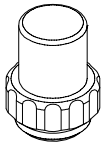

Ordering code: AT000113

ORDERING CODES

Quick code	Description	Options	Max operating pressure (bar)	
CE000230	CEBN-040-NAFN-02-S08-N350	Standard	350	
CE000231	CEBN-040-NAFP-02-S08-N350	Push style override	350	
CE000232	CEBN-040-NAFK-02-S08-N350	Knob style override	350	
CE000530	CEBN-040-NAFN-02-S08-N500	Standard	500	
CE000531	CEBN-040-NAFP-02-S08-N500	Push style override	500	
CE000532	CEBN-040-NAFK-02-S08-N500	Knob style override	500	

SOLENOID OPERATED CARTRIDGE

CEBN-070-NAFN

PILOT OPERATED POPPET TYPE

ATLANTIC Fluid Tech

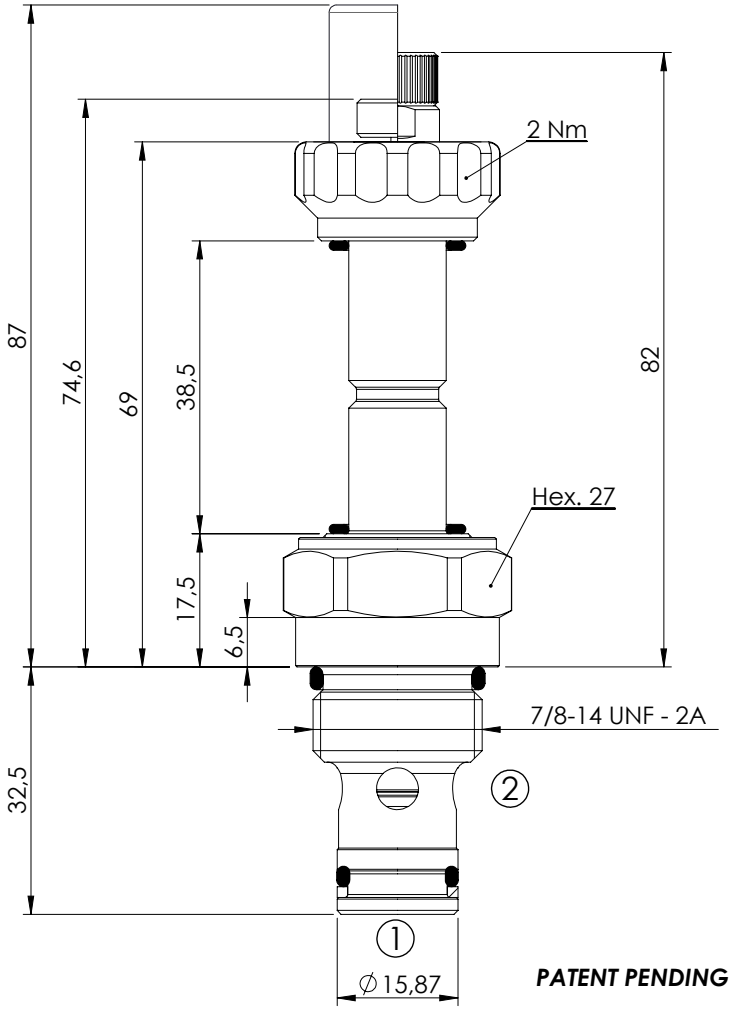

PATENT PENDING

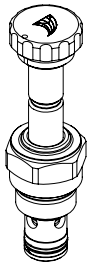

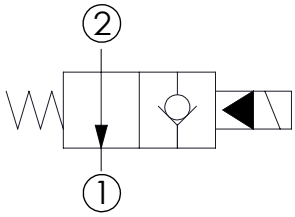

SPECIFICATIONS

Max. operating pressure:	350/500 bar
Rated flow:	70 l/min
Cavity:	SAE-10-2N
Weight:	0,18 kg
Min. voltage required:	90% of nominal
Coil type:	M7 type
Seal kit:	RA900082

NOTES

Installation torque: 55 - 62 Nm

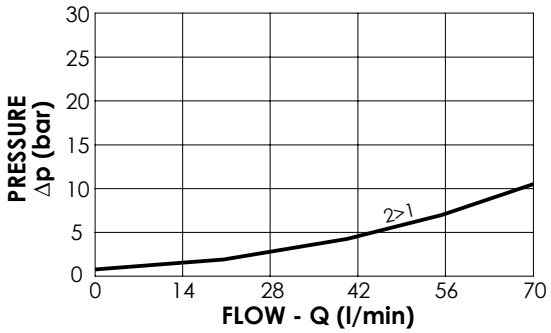

OPTIONS

Standard

Push style override

Knob style override

SEALING CAP

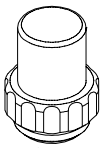

Ordering code: AT000113

ORDERING CODES

Quick code	Description	Options	Max operating pressure (bar)	
CE000265	CEBN-070-NAFN-02-S10-N350	Standard	350	
CE000266	CEBN-070-NAFP-02-S10-N350	Push style override	350	
CE000267	CEBN-070-NAFK-02-S10-N350	Knob style override	350	
CE000565	CEBN-070-NAFN-02-S10-N500	Standard	500	
CE000566	CEBN-070-NAFP-02-S10-N500	Push style override	500	
CE000567	CEBN-070-NAFK-02-S10-N500	Knob style override	500	

SOLENOID OPERATED CARTRIDGE

CEBN-100-NAFN

PILOT OPERATED POPPET TYPE

ATLANTIC Fluid Tech

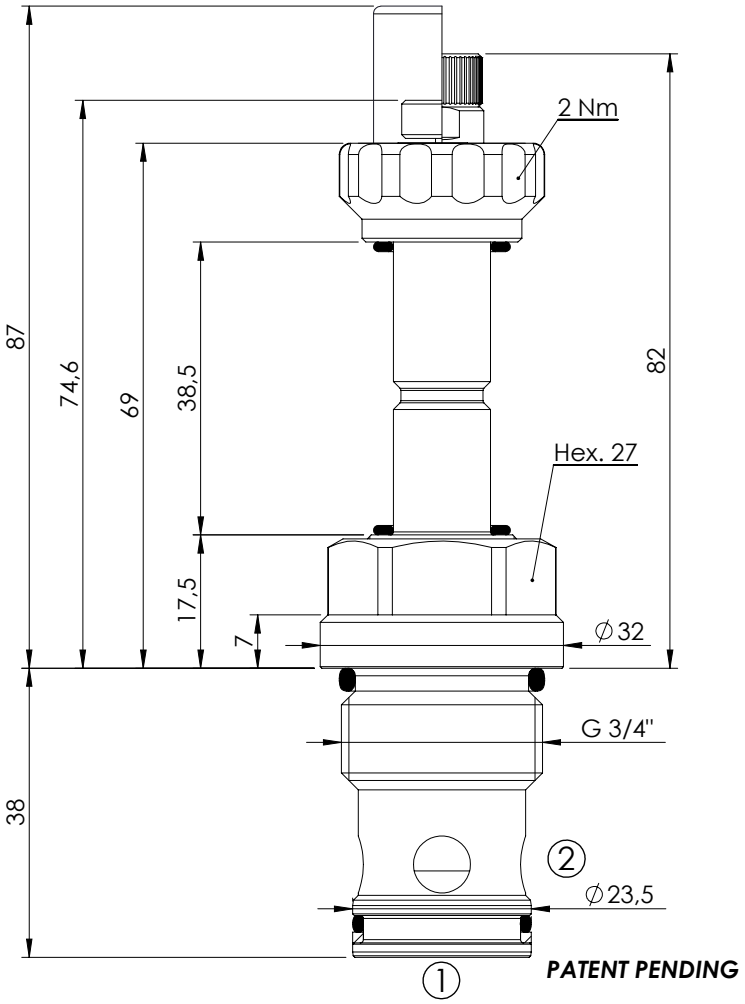

PATENT PENDING

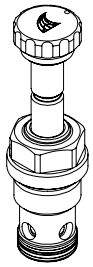

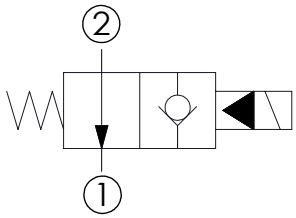

SPECIFICATIONS

Max. operating pressure:	350/500 bar
Rated flow:	100 l/min
Cavity:	VP000057
Weight:	0,25 kg
Min. voltage required:	90% of nominal
Coil type:	M7 type
Seal kit:	RC900057

NOTES

Installation torque:	110 - 130 Nm

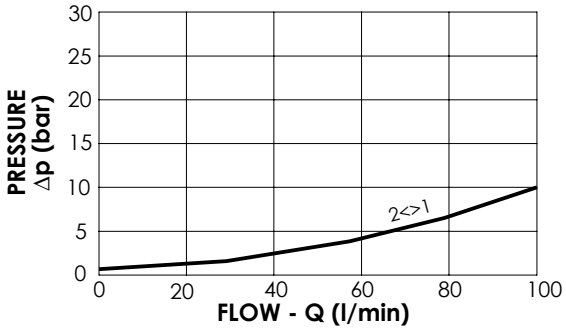

OPTIONS

Standard

Push style override

Knob style override

SEALING CAP

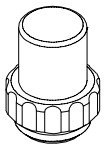

Ordering code:
AT000113

ORDERING CODES

Quick code	Description	Options	Max operating pressure (bar)	
CE000300	CEBN-100-NAFN-02-057-N350	Standard	350	
CE000301	CEBN-100-NAFP-02-057-N350	Push style override	350	
CE000302	CEBN-100-NAFK-02-057-N350	Knob style override	350	
CE000600	CEBN-100-NAFN-02-057-N500	Standard	500	
CE000601	CEBN-100-NAFP-02-057-N500	Push style override	500	
CE000602	CEBN-100-NAFK-02-057-N500	Knob style override	500	

SOLENOID OPERATED CARTRIDGE

CEBN-180-NAFN

PILOT OPERATED POPPET TYPE

ATLANTIC Fluid Tech

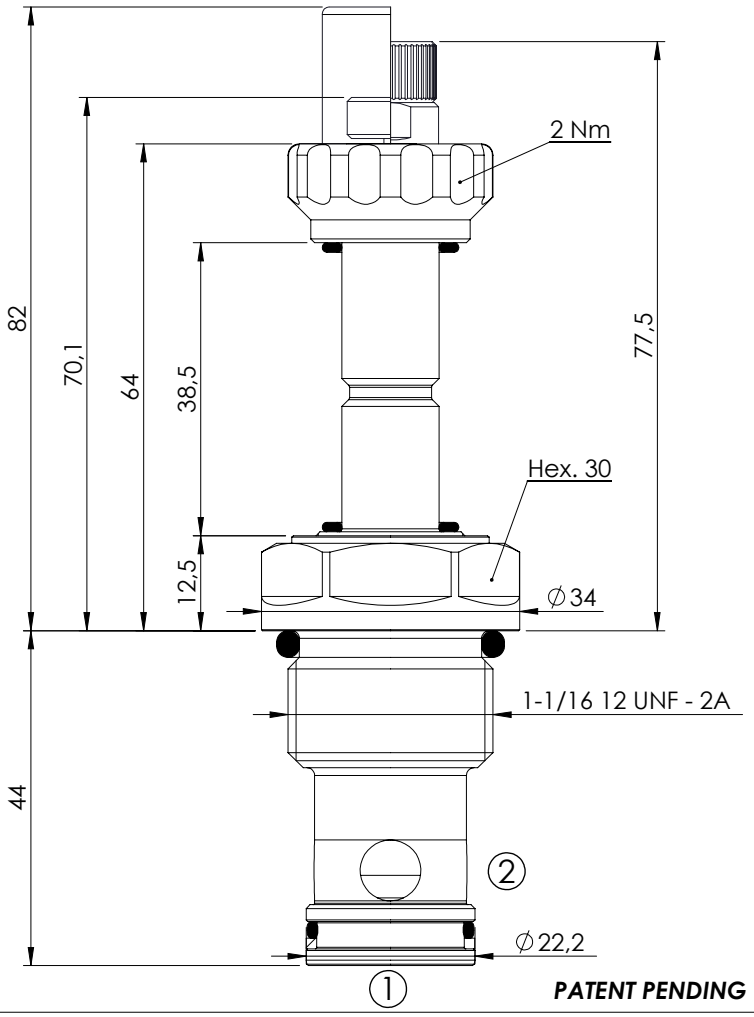

PATENT PENDING

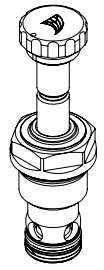

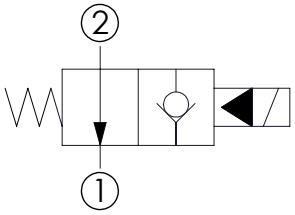

SPECIFICATIONS

Max. operating pressure:	350/500 bar
Rated flow:	180 l/min
Cavity:	SAE-12-2N
Weight:	0,25 kg
Min. voltage required:	90% of nominal
Coil type:	M7 type
Seal kit:	RA900083

NOTES

Installation torque: 135 - 150 Nm

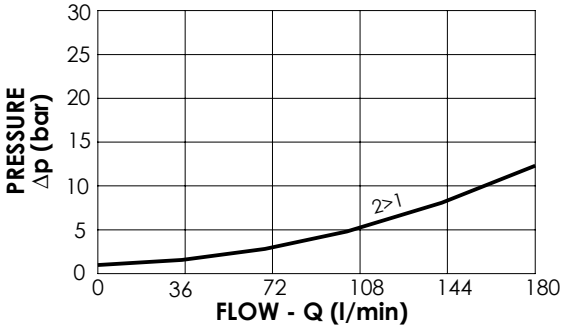

OPTIONS

Standard

Push style override

Knob style override

SEALING CAP

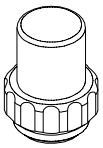

Ordering code: AT000113

ORDERING CODES

Quick code	Description	Options	Max operating pressure (bar)	
CE000335	CEBN-180-NAFN-02-S12-N350	Standard	350	
CE000336	CEBN-180-NAFP-02-S12-N350	Push style override	350	
CE000337	CEBN-180-NAFK-02-S12-N350	Knob style override	350	
CE000635	CEBN-180-NAFN-02-S12-N500	Standard	500	
CE000636	CEBN-180-NAFP-02-S12-N500	Push style override	500	
CE000637	CEBN-180-NAFK-02-S12-N500	Knob style override	500	

SOLENOID OPERATED CARTRIDGE

CEBN-200-NAFN

PILOT OPERATED POPPET TYPE

ATLANTIC Fluid Tech

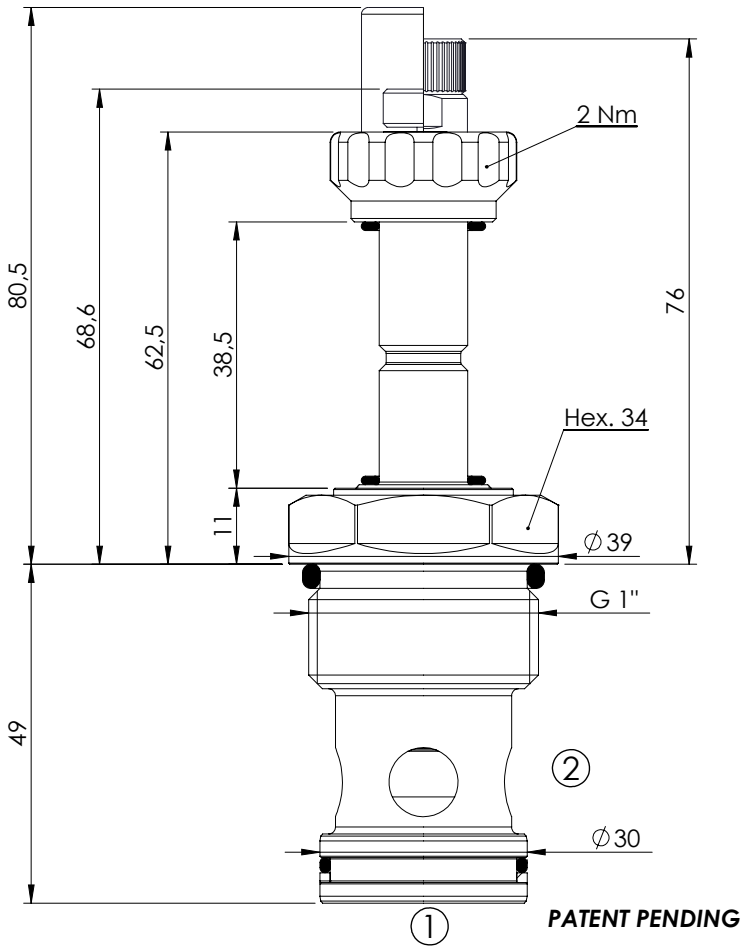

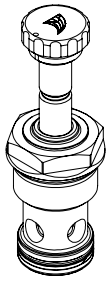

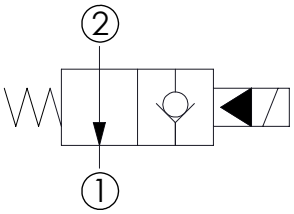

SPECIFICATIONS

Max. operating pressure:	350/500 bar
Rated flow:	200 l/min
Cavity:	VP000013
Weight:	0,35 kg
Min. voltage required:	90% of nominal
Coil type:	M7 type
Seal kit:	RC900013

NOTES

Installation torque: 135 - 150 Nm

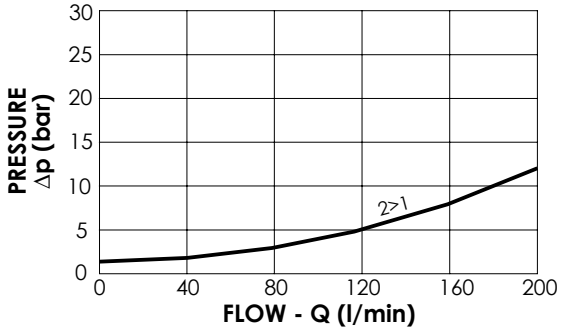

OPTIONS

Standard

Push style override

Knob style override

SEALING CAP

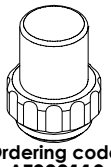

Ordering code: AT000113

ORDERING CODES

Quick code	Description	Options	Max operating pressure (bar)	
CE000370	CEBN-200-NAFN-02-013-N350	Standard	350	
CE000371	CEBN-200-NAFP-02-013-N350	Push style override	350	
CE000372	CEBN-200-NAFK-02-013-N350	Knob style override	350	
CE000670	CEBN-200-NAFN-02-013-N500	Standard	500	
CE000671	CEBN-200-NAFP-02-013-N500	Push style override	500	
CE000672	CEBN-200-NAFK-02-013-N500	Knob style override	500	

SOLENOID OPERATED CARTRIDGE

CEBN-300-NAFN

PILOT OPERATED POPPET TYPE

ATLANTIC Fluid Tech

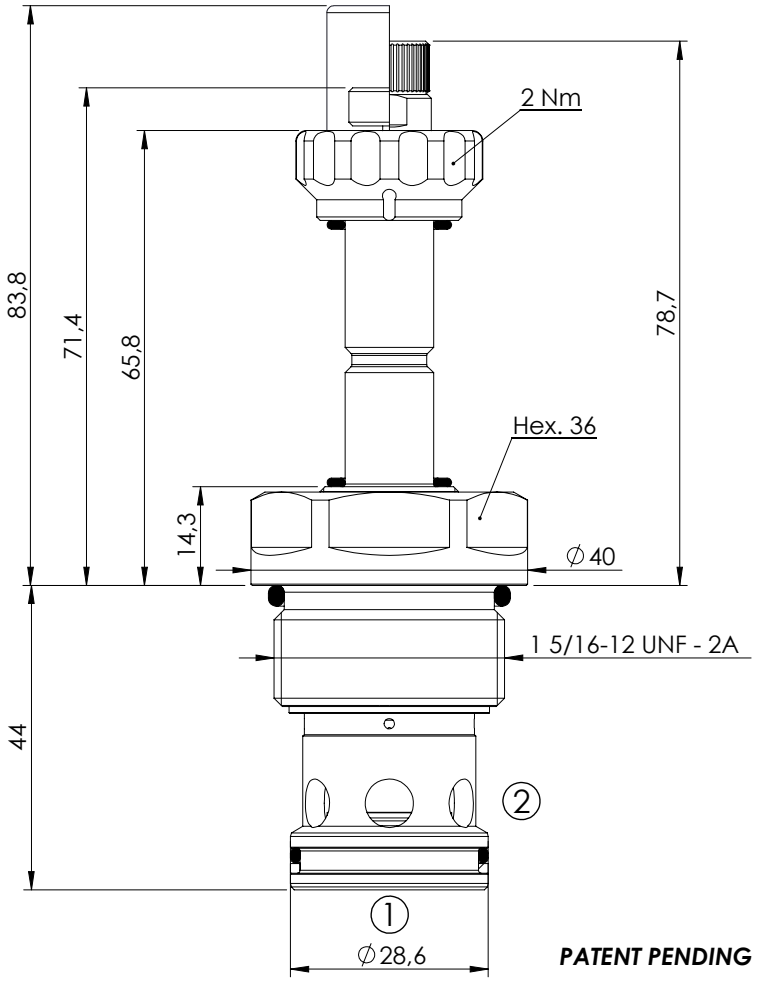

PATENT PENDING

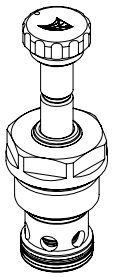

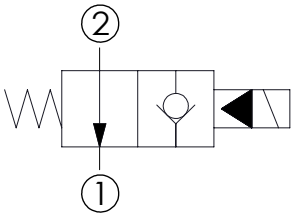

SPECIFICATIONS

Max. operating pressure:	350/500 bar
Rated flow:	300 l/min
Cavity:	SAE-16-2N
Weight:	0,36 kg
Min. voltage required:	90% of nominal
Coil type:	M7 type
Seal kit:	RA900084

NOTES

Installation torque:	118 - 132 Nm

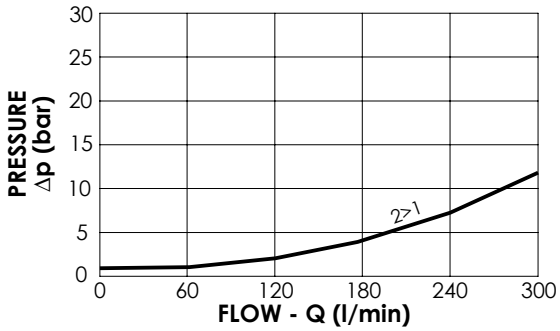

OPTIONS

Standard

Push style override

Knob style override

SEALING CAP

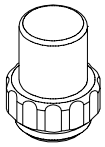

Ordering code:
AT000113

ORDERING CODES

Quick code	Description	Options	Max operating pressure (bar)	
CE000405	CEBN-300-NAFN-02-S16-N350	Standard	350	
CE000406	CEBN-300-NAFP-02-S16-N350	Push style override	350	
CE000407	CEBN-300-NAFK-02-S16-N350	Knob style override	350	
CE000705	CEBN-300-NAFN-02-S16-N500	Standard	500	
CE000706	CEBN-300-NAFP-02-S16-N500	Push style override	500	
CE000707	CEBN-300-NAFK-02-S16-N500	Knob style override	500	

SOLENOID OPERATED CARTRIDGE

CEBN-030-NAFN

PILOT OPERATED POPPET TYPE

ATLANTIC Fluid Tech

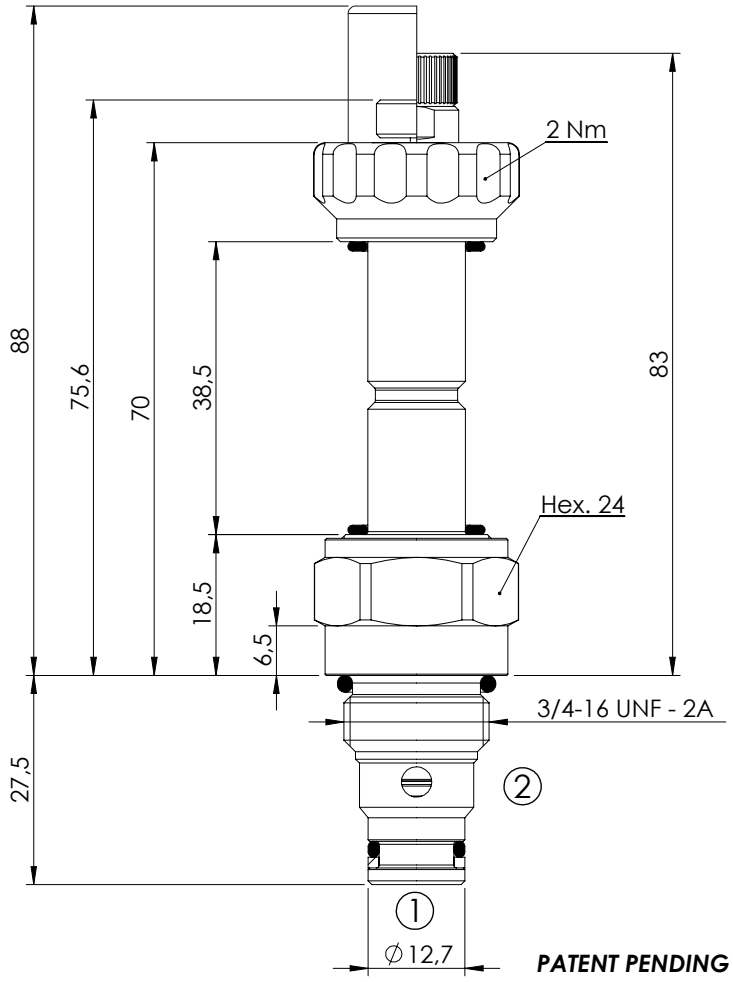

PATENT PENDING

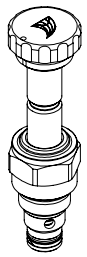

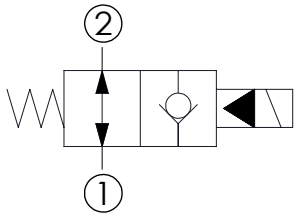

SPECIFICATIONS

Max. operating pressure:	350 bar
Rated flow:	30 l/min
Cavity:	SAE-08-2N
Weight:	0,15 kg
Min. voltage required:	90% of nominal
Coil type:	M7 type
Seal kit:	RA900081

NOTES

Installation torque:	45 - 50 Nm

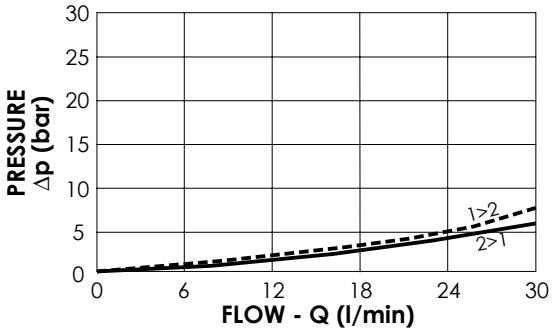

OPTIONS

Standard

Push style override

Knob style override

SEALING CAP

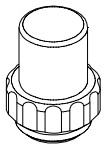

Ordering code: AT000113

ORDERING CODES

Quick code	Description	Options	Max operating pressure (bar)	
CE000464	CEBN-030-NAFN-06-S08-N350	Standard	350	
CE000465	CEBN-030-NAFP-06-S08-N350	Push style override	350	
CE000466	CEBN-030-NAFK-06-S08-N350	Knob style override	350	

SOLENOID OPERATED CARTRIDGE

CEBN-040-NAFN

PILOT OPERATED POPPET TYPE

ATLANTIC Fluid Tech

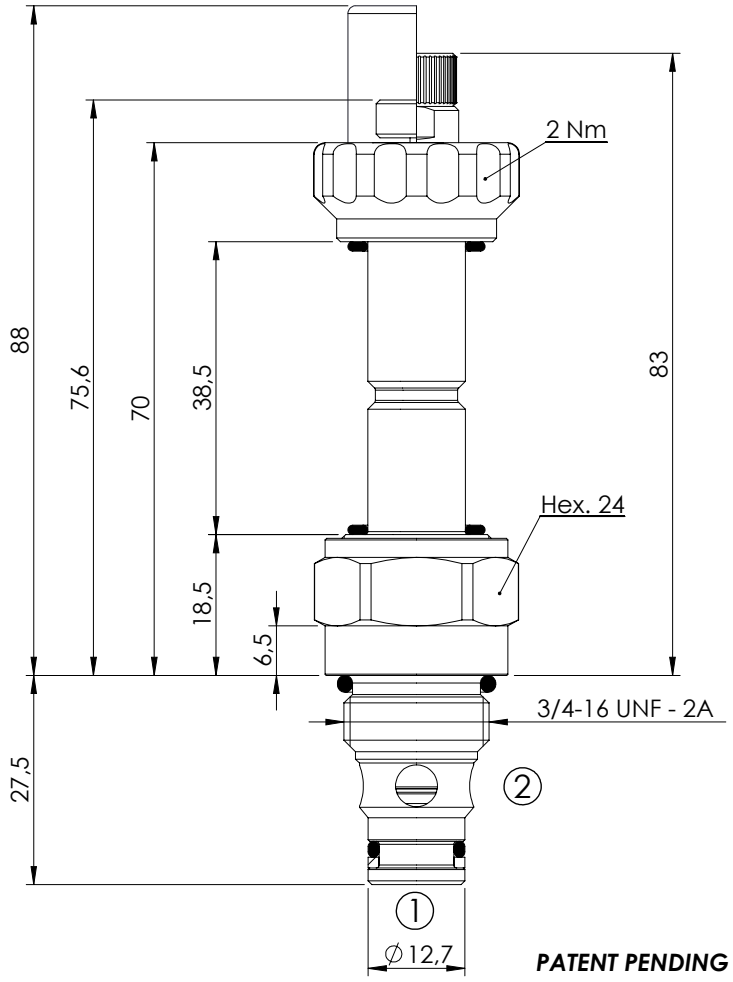

PATENT PENDING

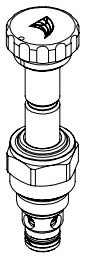

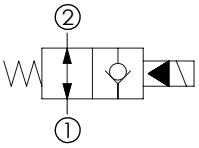

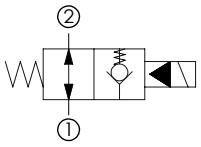

With extra spring

SPECIFICATIONS

Max. operating pressure:	350/500 bar
Rated flow:	40 l/min
Cavity:	SAE-08-2N
Weight:	0,14 kg
Min. voltage required:	90% of nominal
Coil type:	M7 type
Seal kit:	RA900081

NOTES

Installation torque:	45 - 50 Nm

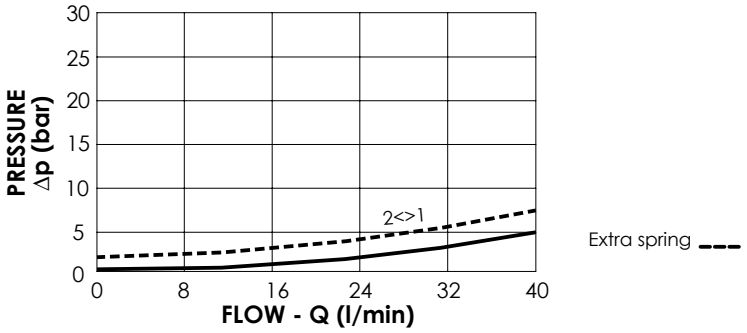

OPTIONS

Standard

Push style override

Knob style override

SEALING CAP

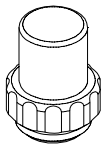

Ordering code: AT000113

ORDERING CODES

Quick code	Description	Options	Max operating pressure (bar)	Extra spring
CE000236	CEBN-040-NAFN-06-S08-N350	Standard	350	No
CE000237	CEBN-040-NAFP-06-S08-N350	Push style override	350	No
CE000238	CEBN-040-NAFK-06-S08-N350	Knob style override	350	No
CE000483	CEBN-040-XAFN-06-S08-N350	Standard	350	Yes
CE000536	CEBN-040-NAFN-06-S08-N500	Standard	500	No
CE000537	CEBN-040-NAFP-06-S08-N500	Push style override	500	No
CE000538	CEBN-040-NAFK-06-S08-N500	Knob style override	500	No

SOLENOID OPERATED CARTRIDGE

CEBN-070-NAFN

PILOT OPERATED POPPET TYPE

ATLANTIC Fluid Tech

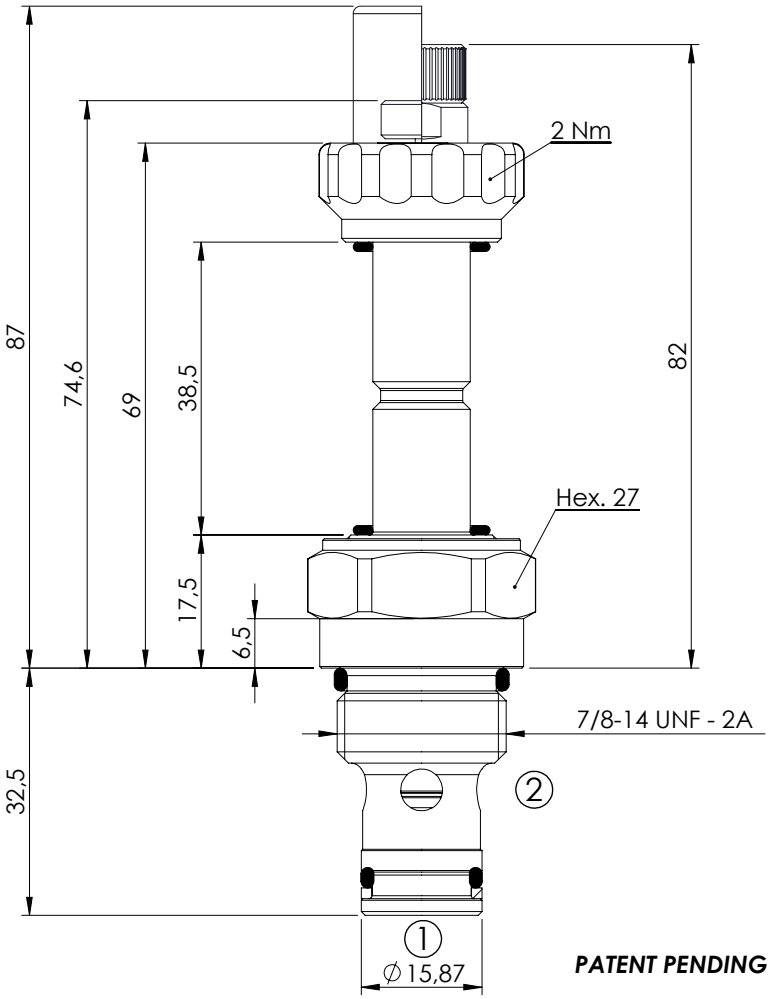

PATENT PENDING

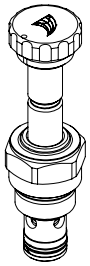

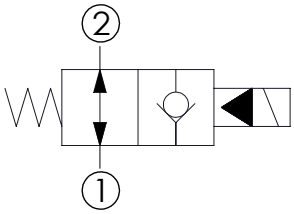

SPECIFICATIONS

Max. operating pressure:	350/500 bar
Rated flow:	70 l/min
Cavity:	SAE-10-2N
Weight:	0,18 kg
Min. voltage required:	90% of nominal
Coil type:	M7 type
Seal kit:	RA900082

NOTES

Installation torque:	55 - 62 Nm

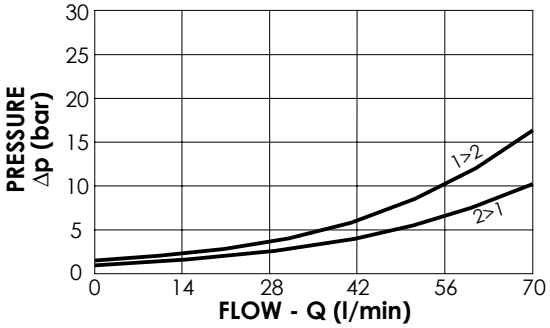

OPTIONS

Standard

Push style override

Knob style override

SEALING CAP

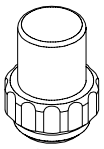

Ordering code:
AT000113

ORDERING CODES

Quick code	Description	Options	Max operating pressure (bar)	
CE000271	CEBN-070-NAFN-06-S10-N350	Standard	350	
CE000272	CEBN-070-NAFP-06-S10-N350	Push style override	350	
CE000273	CEBN-070-NAFK-06-S10-N350	Knob style override	350	
CE000571	CEBN-070-NAFN-06-S10-N500	Standard	500	
CE000572	CEBN-070-NAFP-06-S10-N500	Push style override	500	
CE000573	CEBN-070-NAFK-06-S10-N500	Knob style override	500	

SOLENOID OPERATED CARTRIDGE

CEBN-100-NAFN

PILOT OPERATED POPPET TYPE

ATLANTIC Fluid Tech

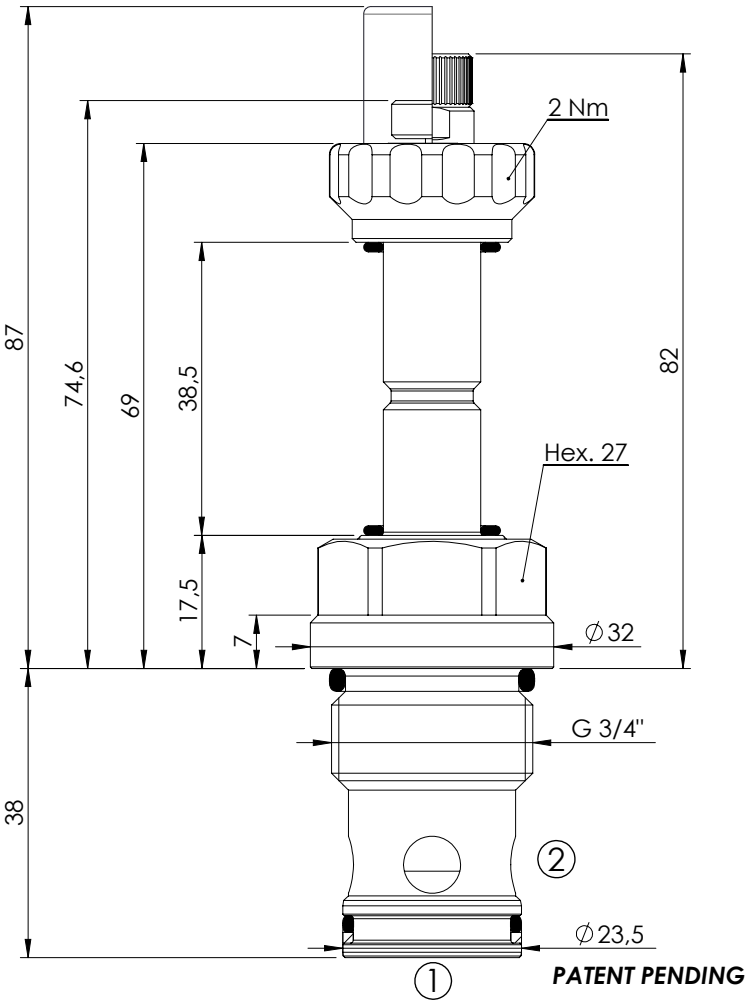

PATENT PENDING

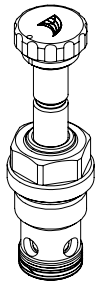

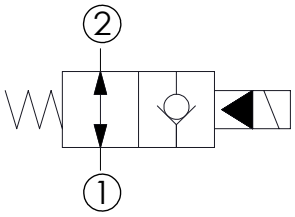

SPECIFICATIONS

Max. operating pressure:	350/500 bar
Rated flow:	100 l/min
Cavity:	VP000057
Weight:	0,25 kg
Min. voltage required:	90% of nominal
Coil type:	M7 type
Seal kit:	RC900057

NOTES

Installation torque: 110 - 130 Nm

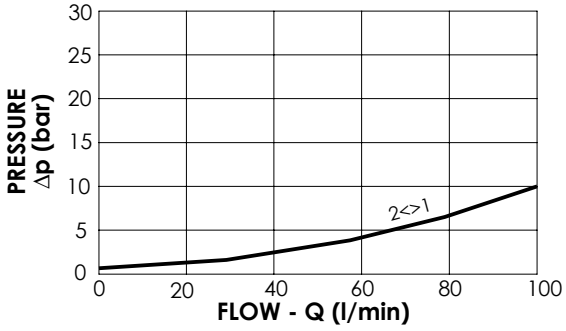

OPTIONS

Standard

Push style override

Knob style override

SEALING CAP

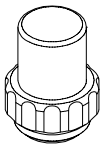

Ordering code: AT000113

ORDERING CODES

Quick code	Description	Options	Max operating pressure (bar)	
CE000306	CEBN-100-NAFN-06-057-N350	Standard	350	
CE000307	CEBN-100-NAFP-06-057-N350	Push style override	350	
CE000308	CEBN-100-NAFK-06-057-N350	Knob style override	350	
CE000606	CEBN-100-NAFN-06-057-N500	Standard	500	
CE000607	CEBN-100-NAFP-06-057-N500	Push style override	500	
CE000608	CEBN-100-NAFK-06-057-N500	Knob style override	500	

SOLENOID OPERATED CARTRIDGE

CEBN-180-NAFN

PILOT OPERATED POPPET TYPE

ATLANTIC Fluid Tech

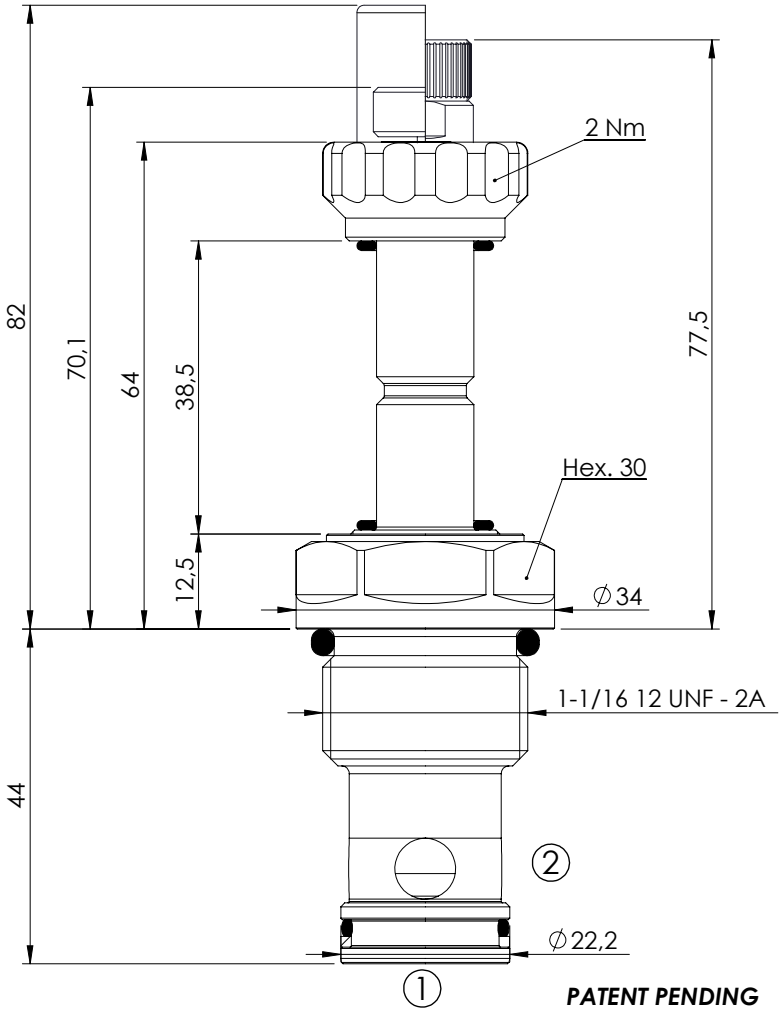

PATENT PENDING

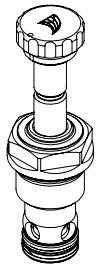

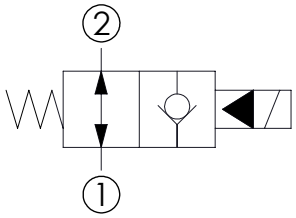

SPECIFICATIONS

Max. operating pressure:	350/500 bar
Rated flow:	180 l/min
Cavity:	SAE-12-2N
Weight:	0,25 kg
Min. voltage required:	90% of nominal
Coil type:	M7 type
Seal kit:	RA900083

NOTES

Installation torque: 135 - 150 Nm

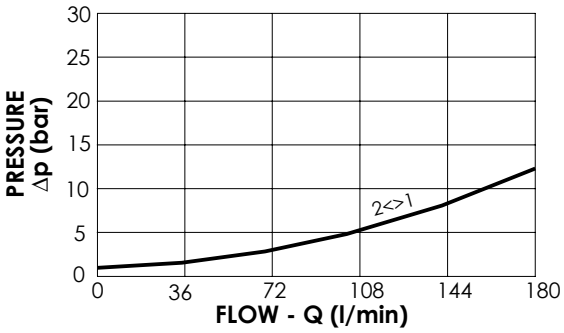

OPTIONS

Standard

Push style override

Knob style override

SEALING CAP

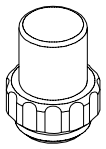

Ordering code: AT000113

ORDERING CODES

Quick code	Description	Options	Max operating pressure (bar)	
CE000341	CEBN-180-NAFN-06-S12-N350	Standard	350	
CE000342	CEBN-180-NAFP-06-S12-N350	Push style override	350	
CE000343	CEBN-180-NAFK-06-S12-N350	Knob style override	350	
CE000641	CEBN-180-NAFN-06-S12-N500	Standard	500	
CE000642	CEBN-180-NAFP-06-S12-N500	Push style override	500	
CE000643	CEBN-180-NAFK-06-S12-N500	Knob style override	500	

SOLENOID OPERATED CARTRIDGE

CEBN-200-NAFN

PILOT OPERATED POPPET TYPE

ATLANTIC Fluid Tech

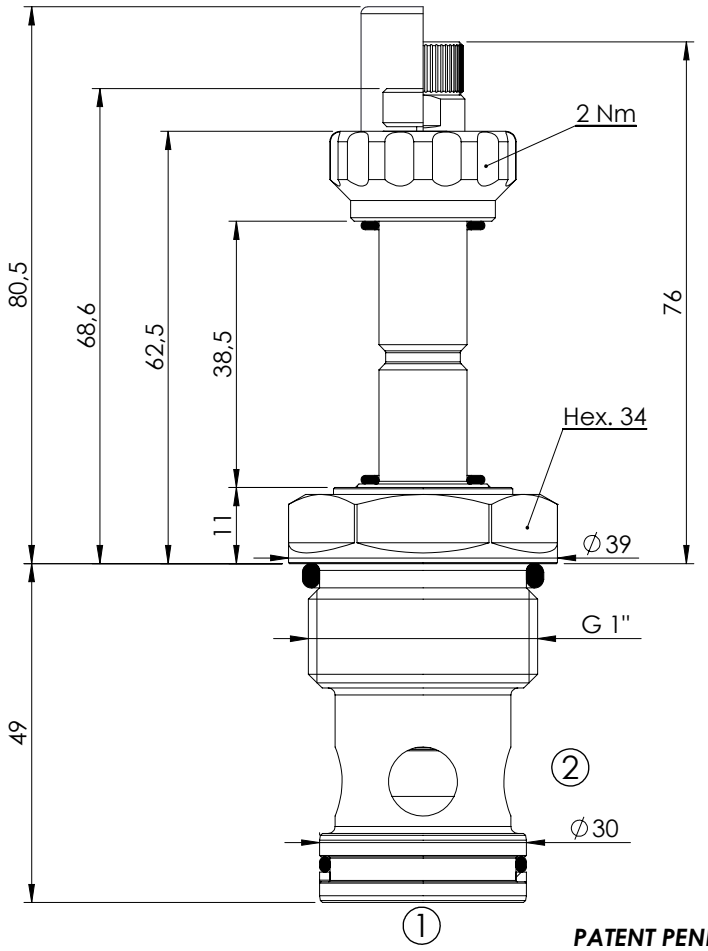

PATENT PENDING

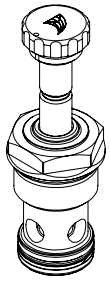

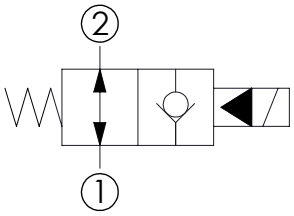

SPECIFICATIONS

Max. operating pressure:	350/500 bar
Rated flow:	200 l/min
Cavity:	VP000013
Weight:	0,35 kg
Min. voltage required:	90% of nominal
Coil type:	M7 type
Seal kit:	RC900013

NOTES

Installation torque:	135 - 150 Nm

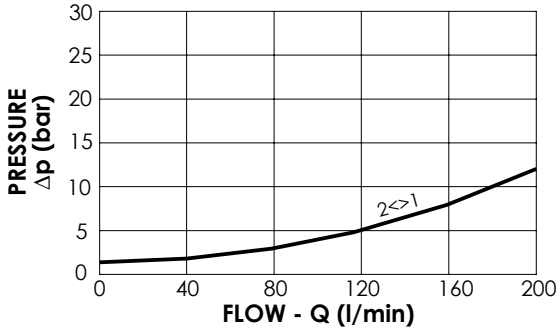

OPTIONS

Standard

Push style override

Knob style override

SEALING CAP

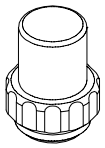

Ordering code: AT000113

ORDERING CODES

Quick code	Description	Options	Max operating pressure (bar)	
CE000376	CEBN-200-NAFN-06-013-N350	Standard	350	
CE000377	CEBN-200-NAFP-06-013-N350	Push style override	350	
CE000378	CEBN-200-NAFK-06-013-N350	Knob style override	350	
CE000676	CEBN-200-NAFN-06-013-N500	Standard	500	
CE000677	CEBN-200-NAFP-06-013-N500	Push style override	500	
CE000678	CEBN-200-NAFK-06-013-N500	Knob style override	500	

SOLENOID OPERATED CARTRIDGE

CEBN-300-NAFN

PILOT OPERATED POPPET TYPE

ATLANTIC Fluid Tech

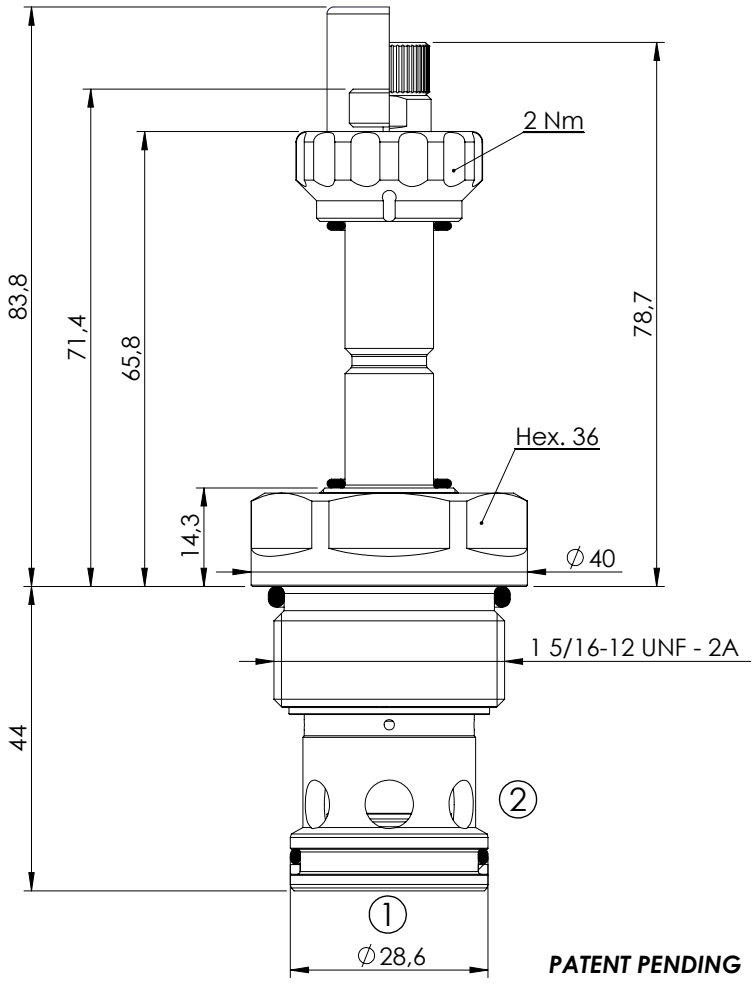

PATENT PENDING

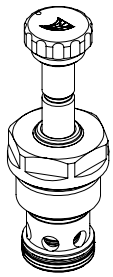

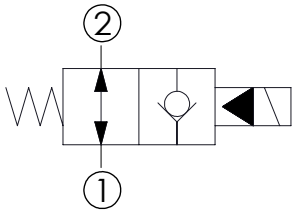

SPECIFICATIONS

Max. operating pressure:	350/500 bar
Rated flow:	300 l/min
Cavity:	SAE-16-2N
Weight:	0,36 kg
Min. voltage required:	90% of nominal
Coil type:	M7 type
Seal kit:	RA900084

NOTES

Installation torque:	118 - 132 Nm

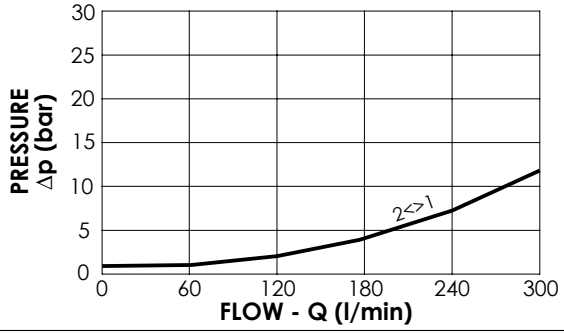

OPTIONS

Standard

Push style override

Knob style override

SEALING CAP

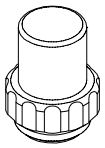

Ordering code:
AT000113

ORDERING CODES

Quick code	Description	Options	Max operating pressure (bar)	
CE000411	CEBN-300-NAFN-06-S16-N350	Standard	350	
CE000412	CEBN-300-NAFP-06-S16-N350	Push style override	350	
CE000413	CEBN-300-NAFK-06-S16-N350	Knob style override	350	
CE000711	CEBN-300-NAFN-06-S16-N500	Standard	500	
CE000712	CEBN-300-NAFP-06-S16-N500	Push style override	500	
CE000713	CEBN-300-NAFK-06-S16-N500	Knob style override	500	

SOLENOID OPERATED CARTRIDGE

CEBN-040-NAFN

PILOT OPERATED POPPET TYPE

ATLANTIC Fluid Tech

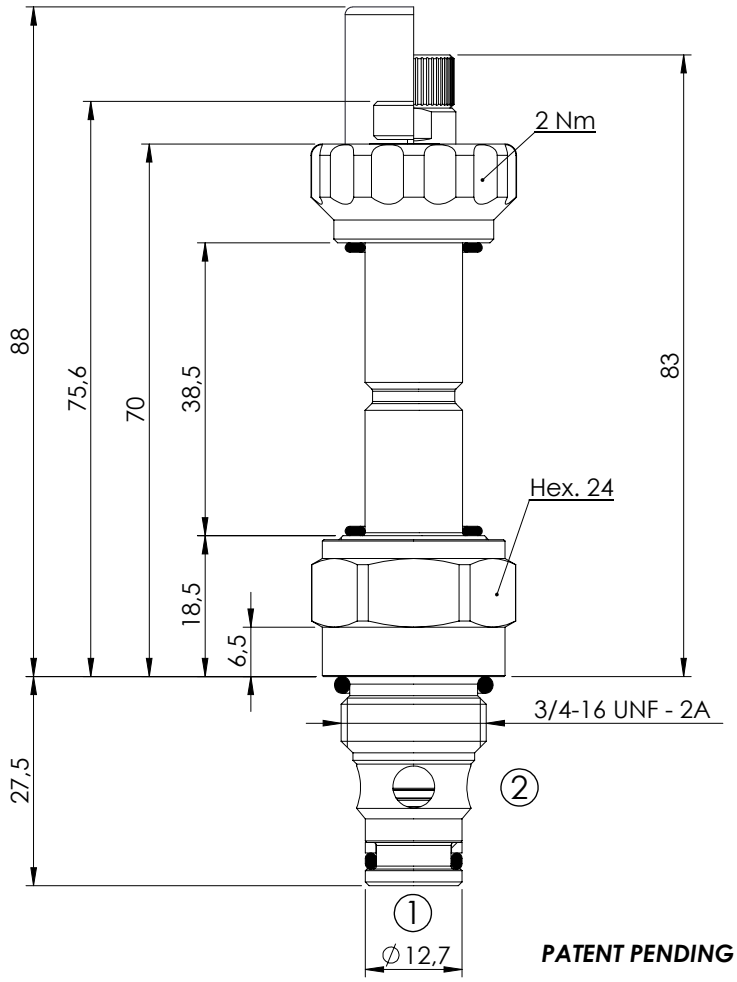

PATENT PENDING

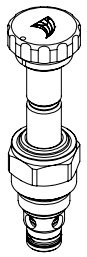

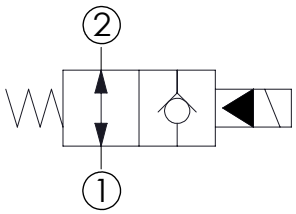

SPECIFICATIONS

Max. operating pressure:	350/500 bar
Rated flow:	40 l/min
Cavity:	SAE-08-2N
Weight:	0,14 kg
Min. voltage required:	90% of nominal
Coil type:	M7 type
Seal kit:	RA900081

NOTES

Installation torque:	45 - 50 Nm

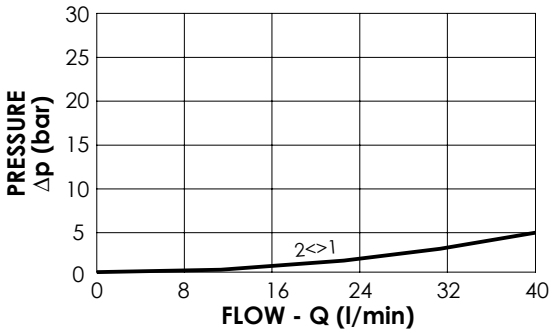

OPTIONS

Standard

Push style override

Knob style override

SEALING CAP

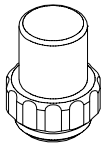

Ordering code: AT000113

ORDERING CODES

Quick code	Description	Options	Max operating pressure (bar)	
CE000233	CEBN-040-NAFN-04-S08-N350	Standard	350	
CE000234	CEBN-040-NAFP-04-S08-N350	Push style override	350	
CE000235	CEBN-040-NAFK-04-S08-N350	Knob style override	350	
CE000533	CEBN-040-NAFN-04-S08-N500	Standard	500	
CE000534	CEBN-040-NAFP-04-S08-N500	Push style override	500	
CE000535	CEBN-040-NAFK-04-S08-N500	Knob style override	500	

SOLENOID OPERATED CARTRIDGE

CEBN-070-NAFN

PILOT OPERATED POPPET TYPE

ATLANTIC Fluid Tech

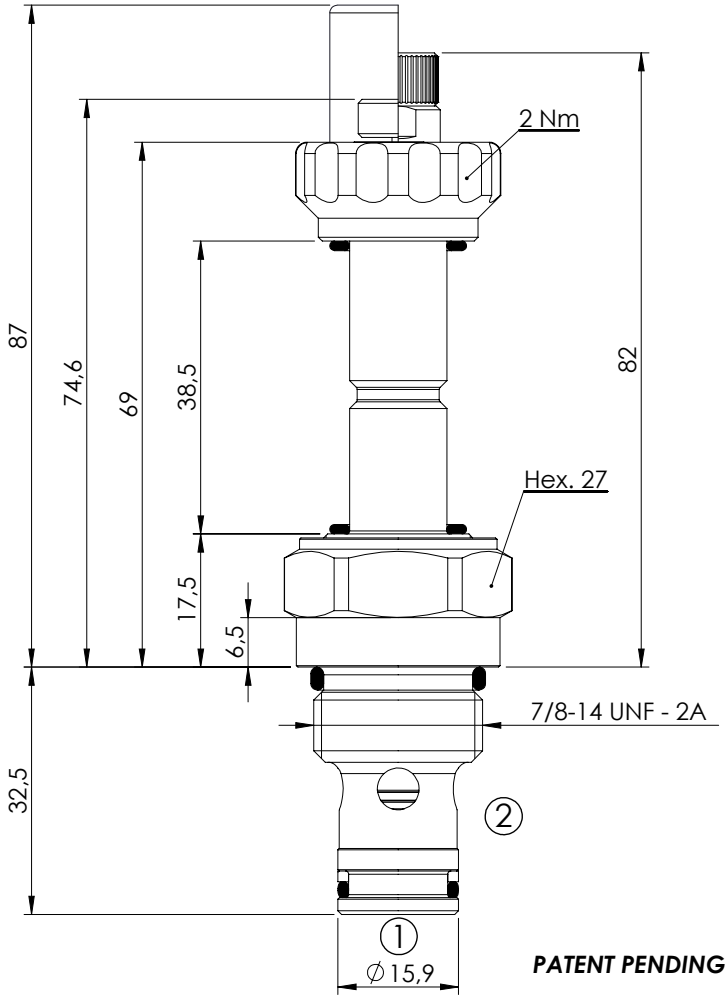

PATENT PENDING

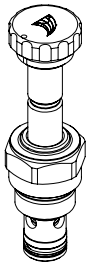

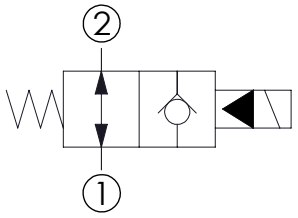

SPECIFICATIONS

Max. operating pressure:	350 bar
Rated flow:	70 l/min
Cavity:	SAE-10-2N
Weight:	0,18 kg
Min. voltage required:	90% of nominal
Coil type:	M7 type
Seal kit:	RA900082

NOTES

Installation torque: 55 - 62 Nm

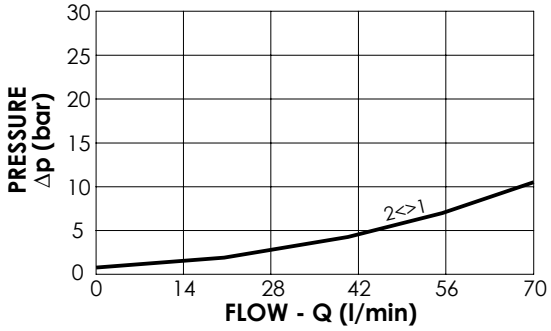

OPTIONS

Standard

Push style override

Knob style override

SEALING CAP

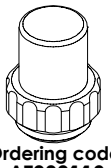

Ordering code: AT000113

ORDERING CODES

Quick code	Description	Options	Max operating pressure (bar)	
CE000268	CEBN-070-NAFN-04-S10-N350	Standard	350	
CE000269	CEBN-070-NAFP-04-S10-N350	Push style override	350	
CE000270	CEBN-070-NAFK-04-S10-N350	Knob style override	350	
CE000568	CEBN-070-NAFN-04-S10-N500	Standard	500	
CE000569	CEBN-070-NAFP-04-S10-N500	Push style override	500	
CE000570	CEBN-070-NAFK-04-S10-N500	Knob style override	500	

SOLENOID OPERATED CARTRIDGE

CEBN-100-NAFN

PILOT OPERATED POPPET TYPE

ATLANTIC Fluid Tech

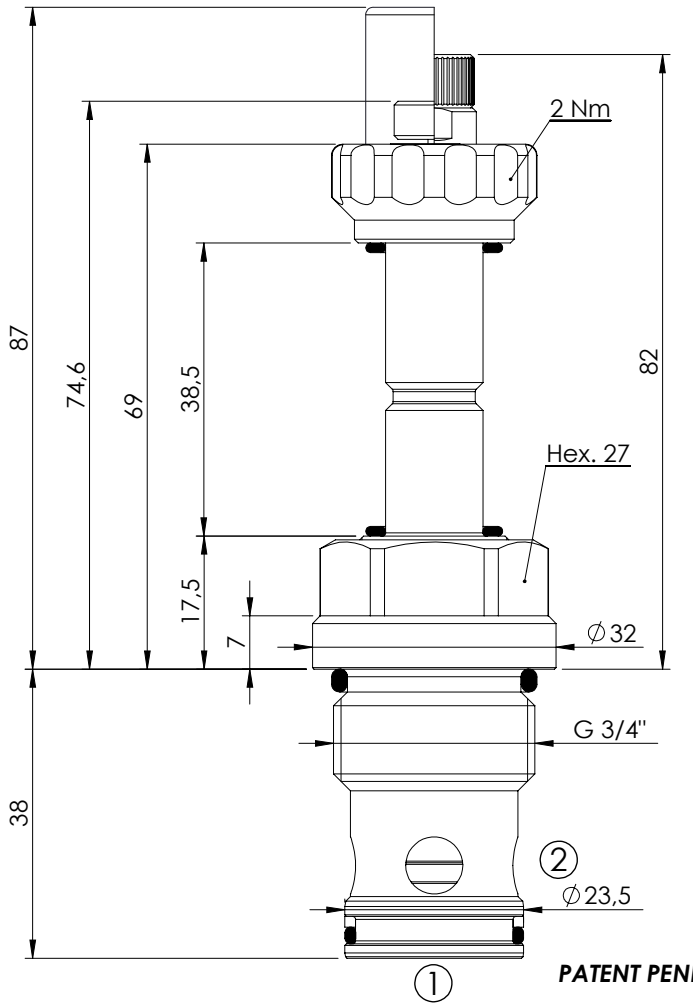

PATENT PENDING

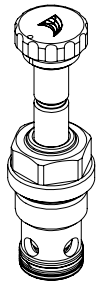

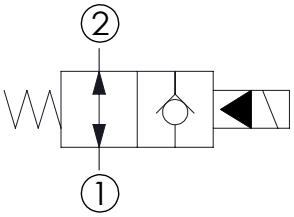

SPECIFICATIONS

Max. operating pressure:	350/500 bar
Rated flow:	100 l/min
Cavity:	VP000057
Weight:	0,25 kg
Min. voltage required:	90% of nominal
Coil type:	M7 type
Seal kit:	RC900057

NOTES

Installation torque:	110 - 110 Nm

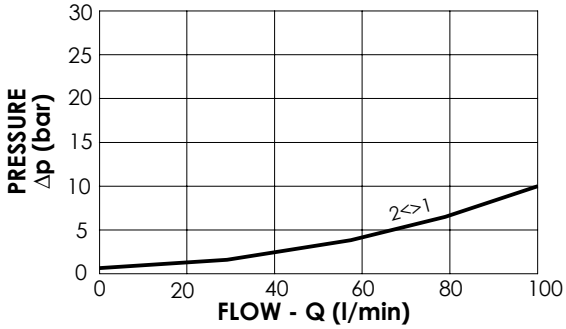

OPTIONS

Standard

Push style override

Knob style override

SEALING CAP

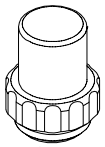

Ordering code:
AT000113

ORDERING CODES

Quick code	Description	Options	Max operating pressure (bar)	
CE000303	CEBN-100-NAFN-04-057-N350	Standard	350	
CE000304	CEBN-100-NAFP-04-057-N350	Push style override	350	
CE000305	CEBN-100-NAFK-04-057-N350	Knob style override	350	
CE000603	CEBN-100-NAFN-04-057-N500	Standard	500	
CE000604	CEBN-100-NAFP-04-057-N500	Push style override	500	
CE000605	CEBN-100-NAFK-04-057-N500	Knob style override	500	

SOLENOID OPERATED CARTRIDGE

CEBN-200-NAFN

PILOT OPERATED POPPET TYPE

ATLANTIC Fluid Tech

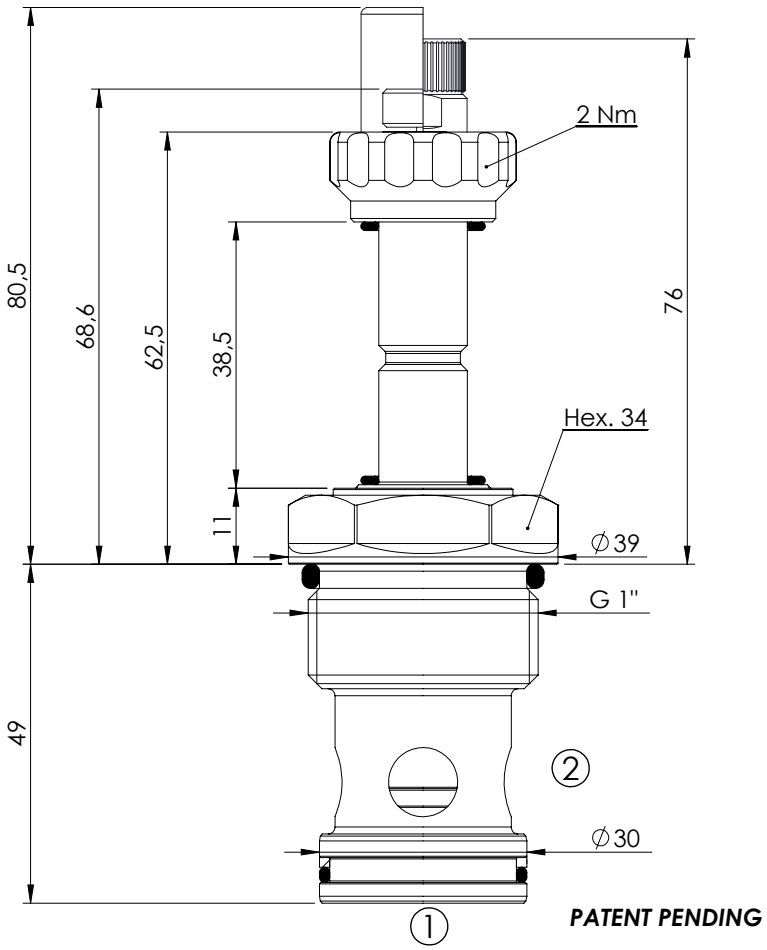

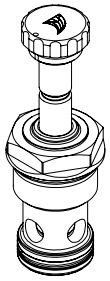

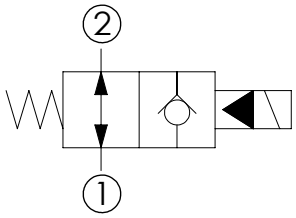

SPECIFICATIONS

Max. operating pressure:	350/500 bar
Rated flow:	200 l/min
Cavity:	VP000013
Weight:	0,35 kg
Min. voltage required:	90% of nominal
Coil type:	M7 type
Seal kit:	RC900013

NOTES

Installation torque:	135 - 150 Nm

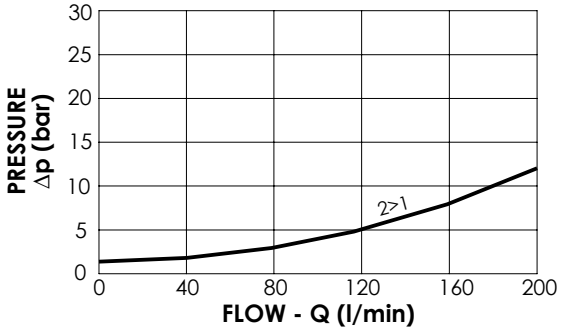

OPTIONS

Standard

Push style override

Knob style override

SEALING CAP

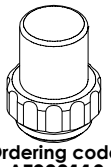

Ordering code:
AT000113

ORDERING CODES

Quick code	Description	Options	Max operating pressure (bar)	
CE000373	CEBN-200-NAFN-04-013-N350	Standard	350	
CE000374	CEBN-200-NAFP-04-013-N350	Push style override	350	
CE000375	CEBN-200-NAFK-04-013-N350	Knob style override	350	
CE000673	CEBN-200-NAFN-04-013-N500	Standard	500	
CE000674	CEBN-200-NAFP-04-013-N500	Push style override	500	
CE000675	CEBN-200-NAFK-04-013-N500	Knob style override	500	

SOLENOID OPERATED CARTRIDGE

CEBN-300-NAFN

PILOT OPERATED POPPET TYPE

ATLANTIC Fluid Tech

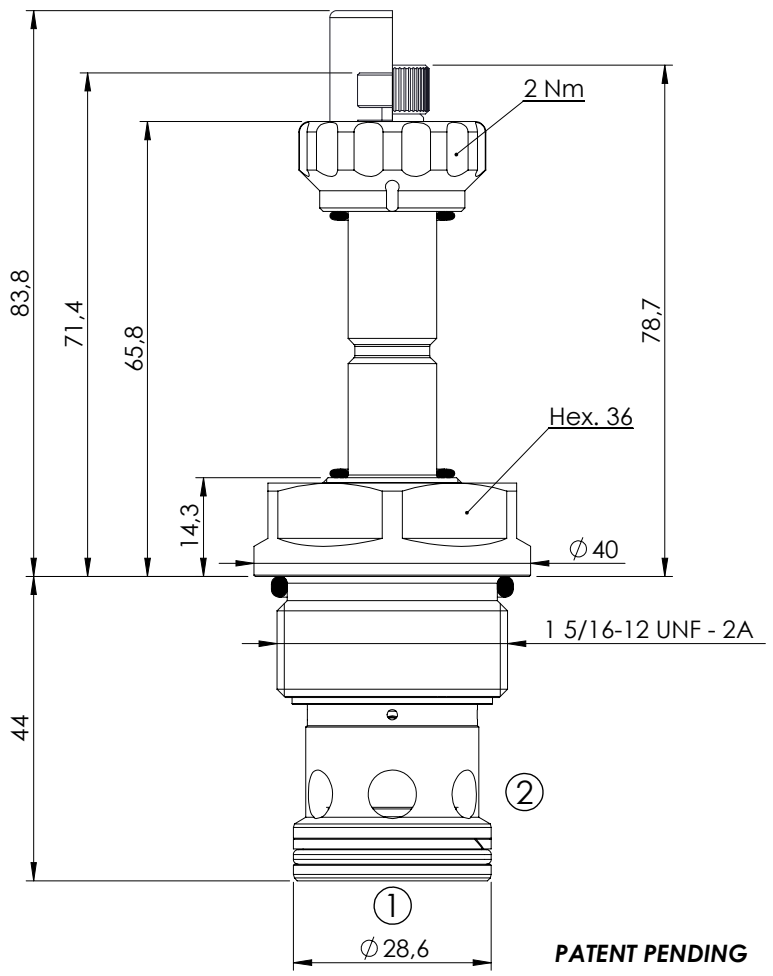

PATENT PENDING

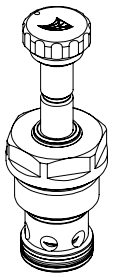

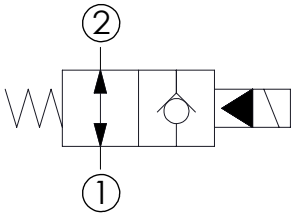

SPECIFICATIONS

Max. operating pressure:	350/500 bar
Rated flow:	300 l/min
Cavity:	SAE-16-2N
Weight:	0,37 kg
Min. voltage required:	90% of nominal
Coil type:	M7 type
Seal kit:	RA700084

NOTES

Installation torque:	118 - 132 Nm

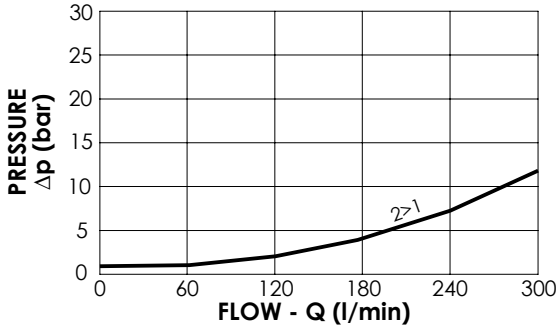

OPTIONS

Standard

Push style override

Knob style override

SEALING CAP

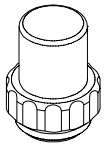

Ordering code:
AT000113

ORDERING CODES

Quick code	Description	Options	Max operating pressure (bar)	
CE000408	CEBN-300-NAFN-04-S16-N350	Standard	350	
CE000409	CEBN-300-NAFP-04-S16-N350	Push style override	350	
CE000410	CEBN-300-NAFK-04-S16-N350	Knob style override	350	
CE000708	CEBN-300-NAFN-04-S16-N500	Standard	500	
CE000709	CEBN-300-NAFP-04-S16-N500	Push style override	500	
CE000710	CEBN-300-NAFK-04-S16-N500	Knob style override	500	

SOLENOID OPERATED CARTRIDGE

CEBN-040-NCFN

PILOT OPERATED POPPET TYPE

ATLANTIC Fluid Tech

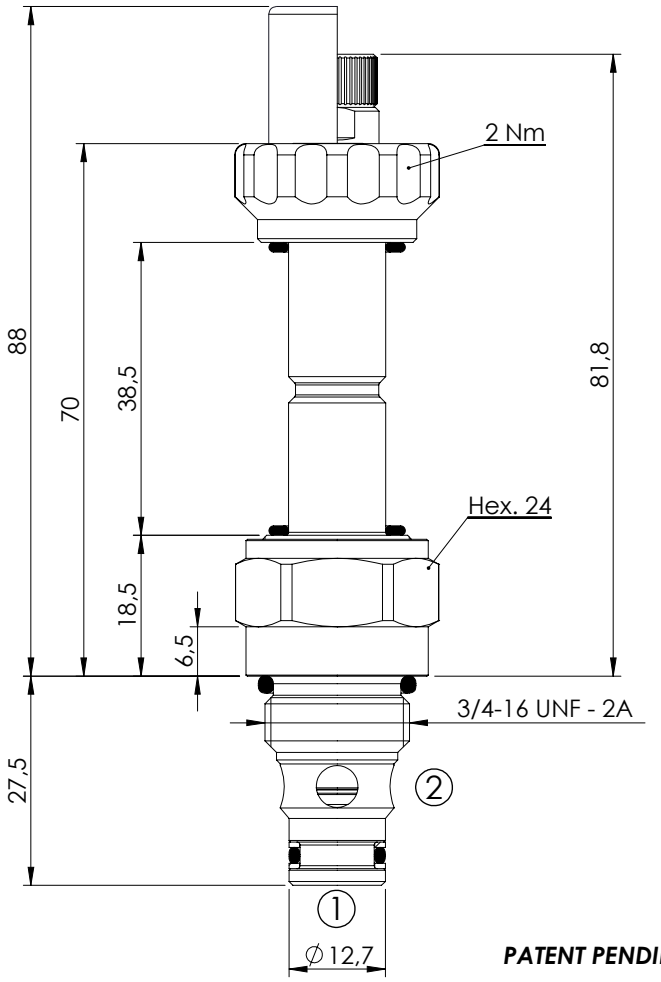

PATENT PENDING

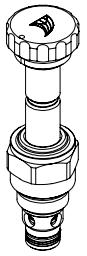

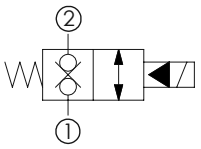

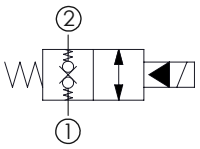

With extra spring

SPECIFICATIONS

Max. operating pressure:	350/500 bar
Rated flow:	40 l/min
Cavity:	SAE-08-2N
Weight:	0,14 kg
Min. voltage required:	90% of nominal
Coil type:	M7 type
Seal kit:	RB900081

NOTES

Installation torque:	45 - 50 Nm

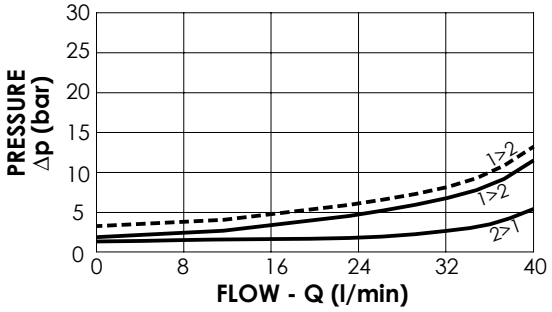

Extra spring ---

OPTIONS

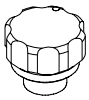

Standard

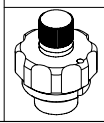

Knob style override

SEALING CAP

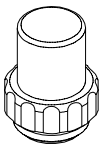

Ordering code: AT000113

ORDERING CODES

Quick code	Description	Options	Max operating pressure (bar)	Extra Spring
CE000226	CEBN-040-NCFN-31-S08-N350	Standard	350	No
CE000228	CEBN-040-NCFK-31-S08-N350	Knob style override	350	No
CE000227	CEBN-040-XCFN-31-S08-N350	Standard	350	Yes
CE000229	CEBN-040-XCFK-31-S08-N350	Knob style override	350	Yes
CE000526	CEBN-040-NCFN-31-S08-N500	Standard	500	No
CE000528	CEBN-040-NCFK-31-S08-N500	Knob style override	500	No

SOLENOID OPERATED CARTRIDGE

CEBN-070-NCFN

PILOT OPERATED POPPET TYPE

ATLANTIC Fluid Tech

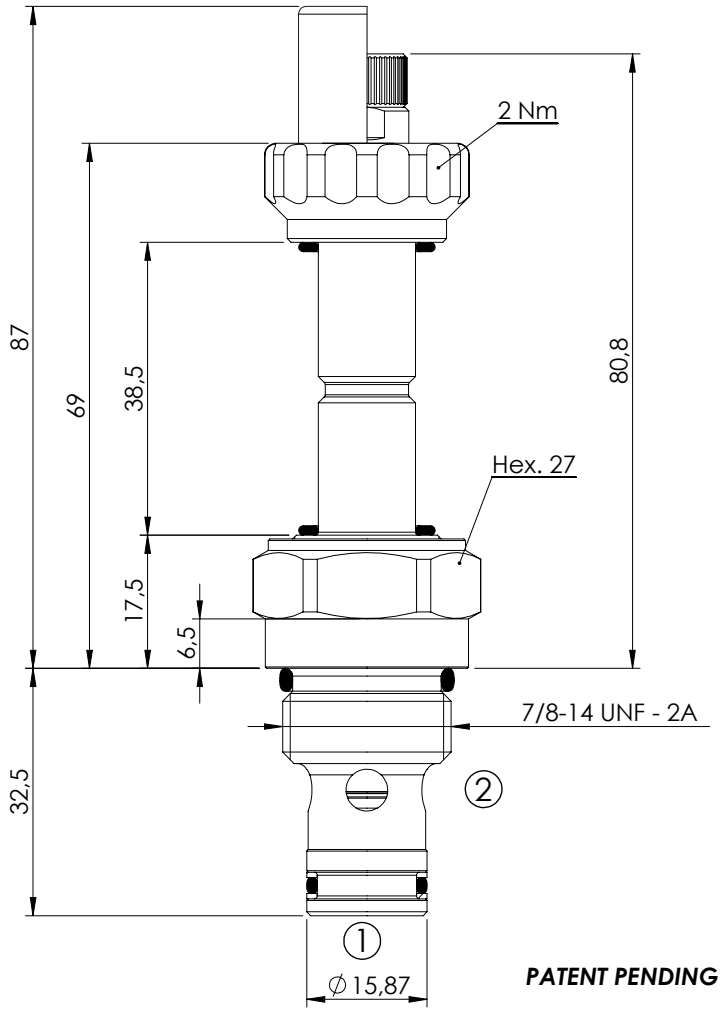

PATENT PENDING

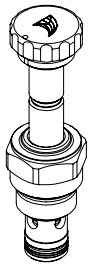

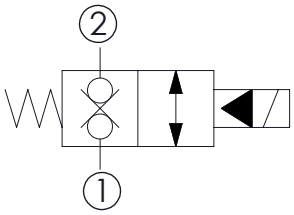

SPECIFICATIONS

Max. operating pressure:	350/500 bar
Rated flow:	70 l/min
Cavity:	SAE-10-2N
Weight:	0,18 kg
Min. voltage required:	90% of nominal
Coil type:	M7 type
Seal kit:	RB900082

NOTES

Installation torque: 55 - 62 Nm

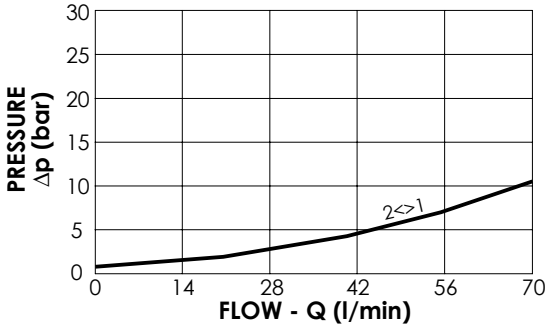

OPTIONS

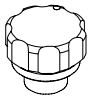

Standard

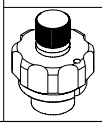

Knob style override

SEALING CAP

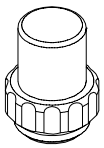

Ordering code: AT000113

ORDERING CODES

Quick code	Description	Options	Max operating pressure (bar)	
CE000261	CEBN-070-NCFN-31-S10-N350	Standard	350	
CE000263	CEBN-070-NCFK-31-S10-N350	Knob style override	350	
CE000561	CEBN-070-NCFN-31-S10-N500	Standard	500	
CE000563	CEBN-070-NCFK-31-S10-N500	Knob style override	500	

SOLENOID OPERATED CARTRIDGE

CEBN-100-NCFN

PILOT OPERATED POPPET TYPE

ATLANTIC Fluid Tech

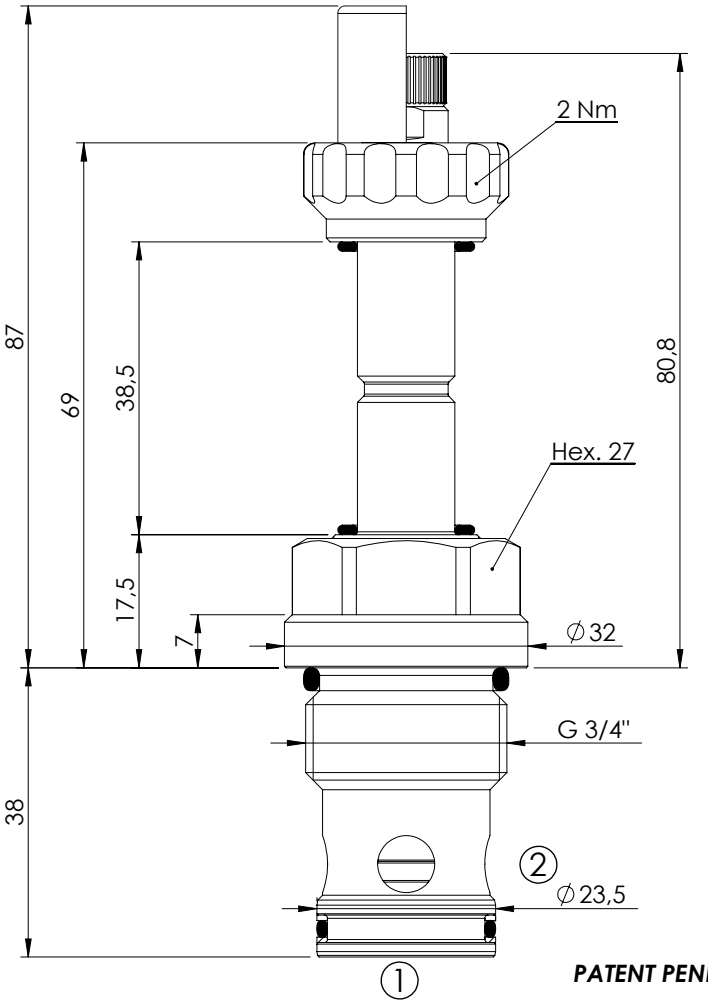

PATENT PENDING

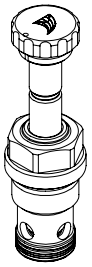

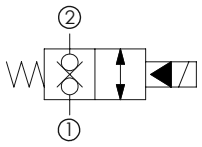

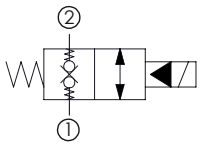

With extra spring

SPECIFICATIONS

Max. operating pressure:	350/500 bar
Rated flow:	100 l/min
Cavity:	VP000057
Weight:	0,25 kg
Min. voltage required:	90% of nominal
Coil type:	M7 type
Seal kit:	RD900057

NOTES

Installation torque: 110 - 130 Nm

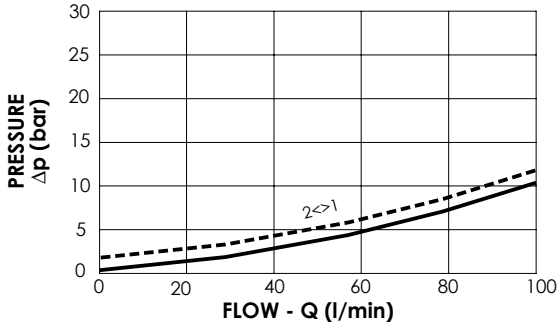

Extra spring ---

OPTIONS

Standard

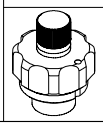

Knob style override

SEALING CAP

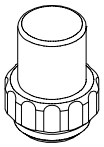

Ordering code: AT000113

ORDERING CODES

Quick code	Description	Options	Max operating pressure (bar)	Extra Spring
CE000296	CEBN-100-NCFN-31-057-N350	Standard	350	No
CE000298	CEBN-100-NCFK-31-057-N350	Knob style override	350	No
CE000297	CEBN-100-XCFN-31-057-N350	Standard	350	Yes
CE000299	CEBN-100-XCFK-31-057-N350	Knob style override	350	Yes
CE000596	CEBN-100-NCFN-31-057-N500	Standard	500	No
CE000598	CEBN-100-NCFK-31-057-N500	Knob style override	500	No

SOLENOID OPERATED CARTRIDGE

CEBN-180-NCFN

PILOT OPERATED POPPET TYPE

ATLANTIC Fluid Tech

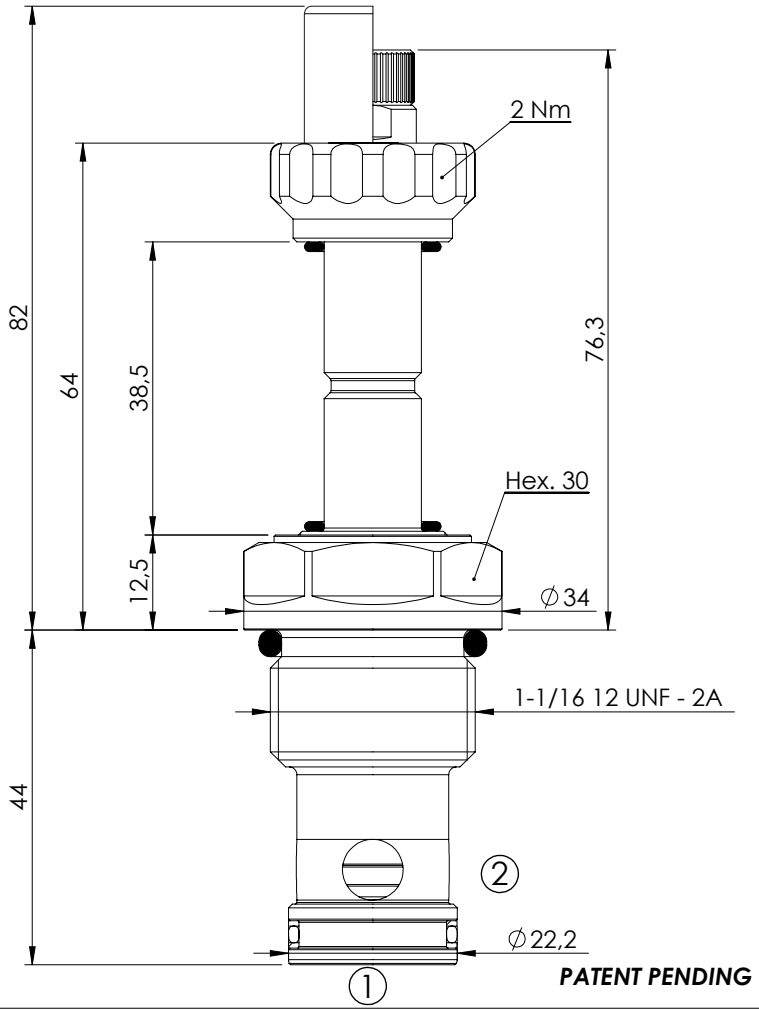

PATENT PENDING

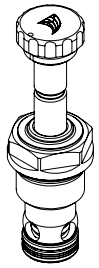

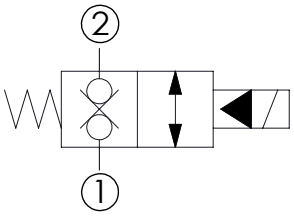

SPECIFICATIONS

Max. operating pressure:	350/500 bar
Rated flow:	180 l/min
Cavity:	SAE-12-2N
Weight:	0,25 kg
Min. voltage required:	90% of nominal
Coil type:	M7 type
Seal kit:	RB900083

NOTES

Installation torque:	135 - 150 Nm

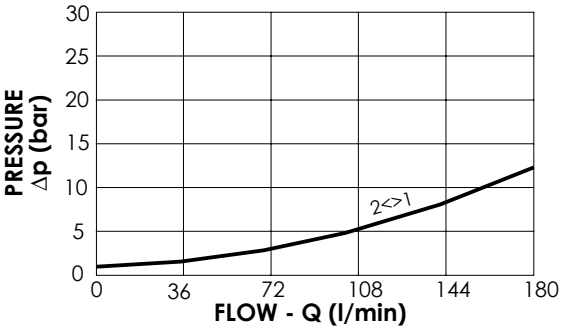

OPTIONS

Standard

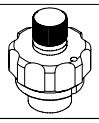

Knob style override

SEALING CAP

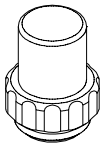

Ordering code: AT000113

ORDERING CODES

Quick code	Description	Options	Max operating pressure (bar)	
CE000331	CEBN-180-NCFN-31-S12-N350	Standard	350	
CE000333	CEBN-180-NCFK-31-S12-N350	Knob style override	350	
CE000631	CEBN-180-NCFN-31-S12-N500	Standard	500	
CE000633	CEBN-180-NCFK-31-S12-N500	Knob style override	500	

SOLENOID OPERATED CARTRIDGE

CEBN-200-NCFN

PILOT OPERATED POPPET TYPE

ATLANTIC Fluid Tech

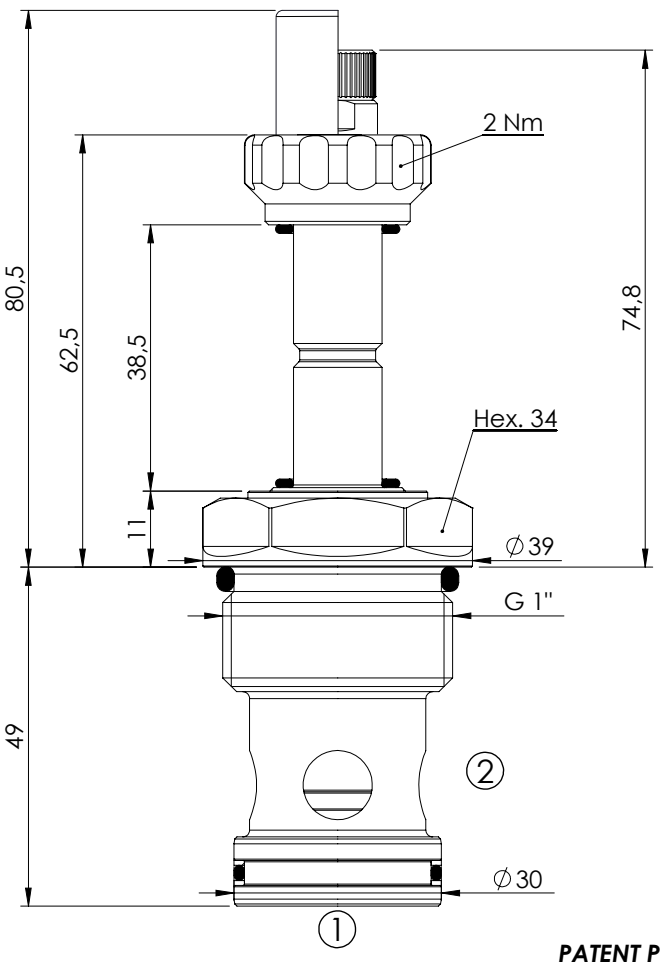

PATENT PENDING

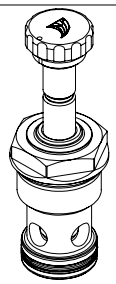

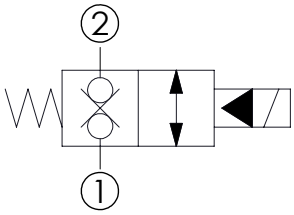

SPECIFICATIONS

Max. operating pressure:	350/500 bar
Rated flow:	200 l/min
Cavity:	VP000013
Weight:	0,35 kg
Min. voltage required:	90% of nominal
Coil type:	M7 type
Seal kit:	RD900013

NOTES

Installation torque:	135 - 150 Nm

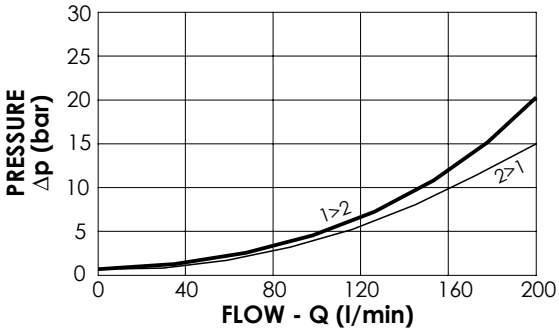

OPTIONS

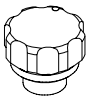

Standard

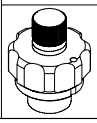

Knob style override

SEALING CAP

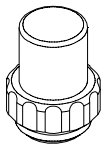

Ordering code:
AT000113

ORDERING CODES

Quick code	Description	Options	Max operating pressure (bar)	
CE000366	CEBN-200-NCFN-31-013-N350	Standard	350	
CE000368	CEBN-200-NCFK-31-013-N350	Knob style override	350	
CE000666	CEBN-200-NCFN-31-013-N500	Standard	500	
CE000668	CEBN-200-NCFK-31-013-N500	Knob style override	500	

SOLENOID OPERATED CARTRIDGE

CEBN-300-NCFN

PILOT OPERATED POPPET TYPE

ATLANTIC Fluid Tech

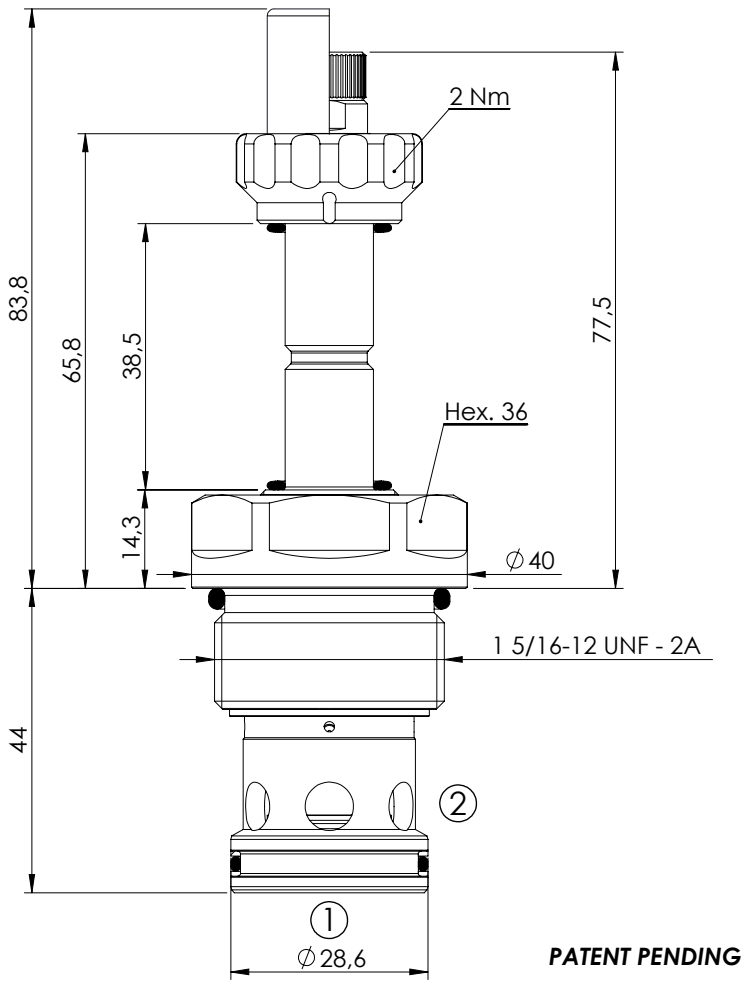

PATENT PENDING

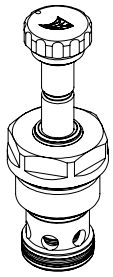

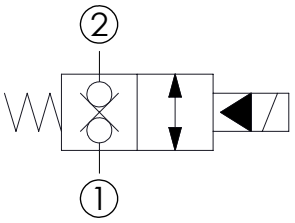

SPECIFICATIONS

Max. operating pressure:	350/500 bar
Rated flow:	300 l/min
Cavity:	SAE-16-2N
Weight:	0,36 kg
Min. voltage required:	90% of nominal
Coil type:	M7 type
Seal kit:	RB900084

NOTES

Installation torque: 118 - 132 Nm

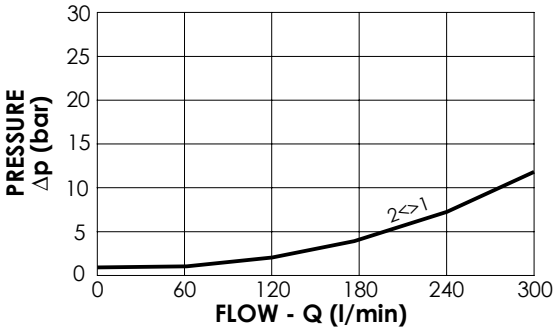

OPTIONS

Standard

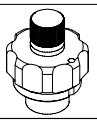

Knob style override

SEALING CAP

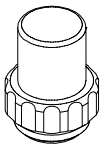

Ordering code: AT000113

ORDERING CODES

Quick code	Description	Options	Max operating pressure (bar)	
CE000401	CEBN-300-NCFN-31-S16-N350	Standard	350	
CE000403	CEBN-300-NCFK-31-S16-N350	Knob style override	350	
CE000701	CEBN-300-NCFN-31-S16-N500	Standard	500	
CE000703	CEBN-300-NCFK-31-S16-N500	Knob style override	500	

SOLENOID OPERATED CARTRIDGE

CEBN-040-NAFN

PILOT OPERATED POPPET TYPE

ATLANTIC Fluid Tech

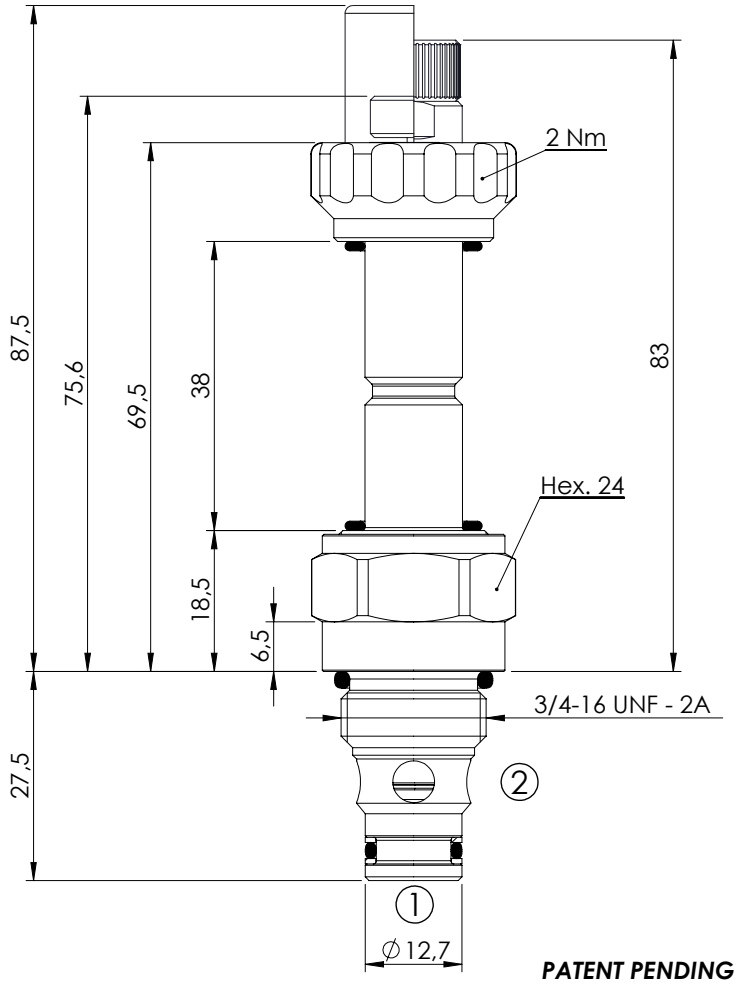

PATENT PENDING

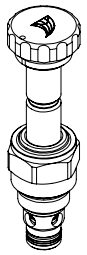

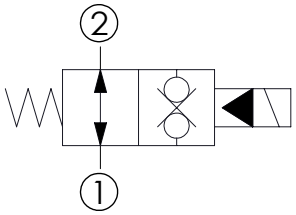

SPECIFICATIONS

Max. operating pressure:	350/500 bar
Rated flow:	40 l/min
Cavity:	SAE-08-2N
Weight:	0,14 kg
Min. voltage required:	90% of nominal
Coil type:	M7 type
Seal kit:	RB900081

NOTES

Installation torque:	45 - 50 Nm

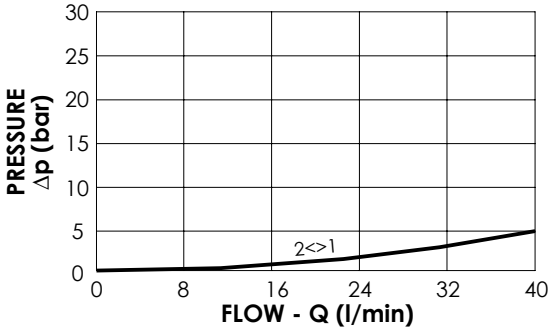

OPTIONS

Standard

Push style override

Knob style override

SEALING CAP

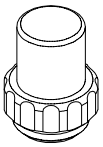

Ordering code: AT000113

ORDERING CODES

Quick code	Description	Options	Max operating pressure (bar)	
CE000242	CEBN-040-NAFN-32-S08-N350	Standard	350	
CE000243	CEBN-040-NAFP-32-S08-N350	Push style override	350	
CE000244	CEBN-040-NAFK-32-S08-N350	Knob style override	350	
CE000542	CEBN-040-NAFN-32-S08-N500	Standard	500	
CE000543	CEBN-040-NAFP-32-S08-N500	Push style override	500	
CE000544	CEBN-040-NAFK-32-S08-N500	Knob style override	500	

SOLENOID OPERATED CARTRIDGE

CEBN-070-NAFN

PILOT OPERATED POPPET TYPE

ATLANTIC Fluid Tech

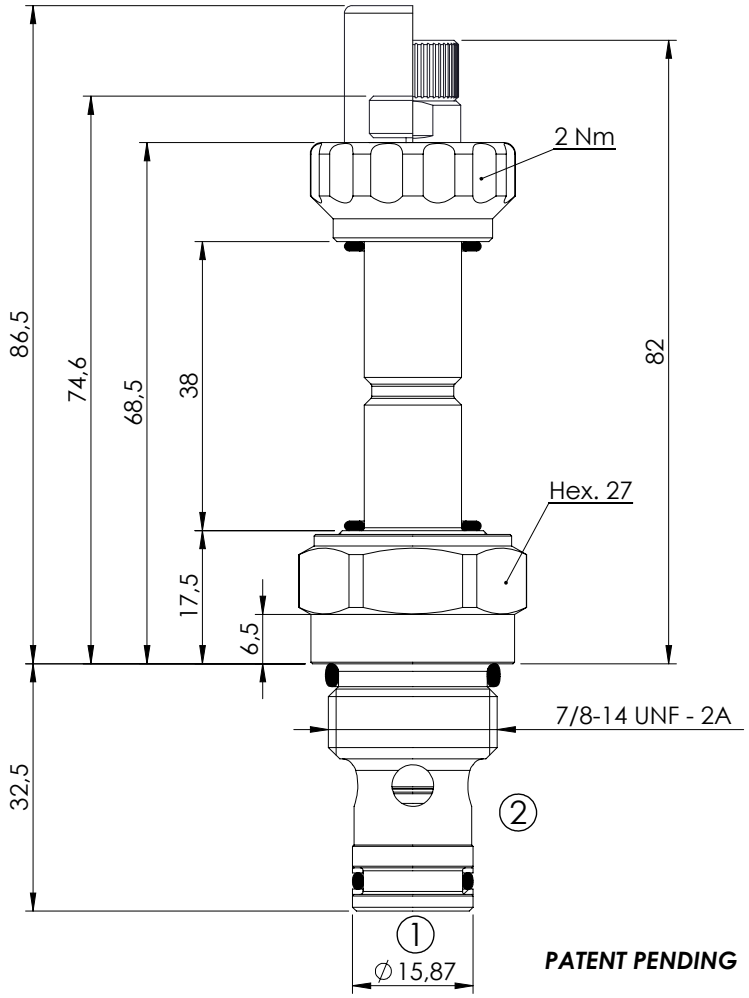

PATENT PENDING

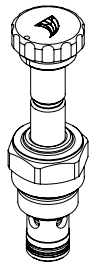

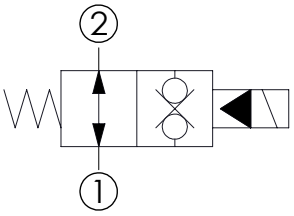

SPECIFICATIONS

Max. operating pressure:	350/500 bar
Rated flow:	70 l/min
Cavity:	SAE-10-2N
Weight:	0,18 kg
Min. voltage required:	90% of nominal
Coil type:	M7 type
Seal kit:	RB900082

NOTES

Installation torque:	55 - 62 Nm

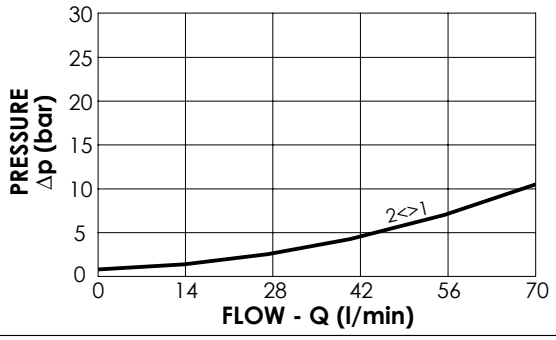

OPTIONS

Standard

Push style override

Knob style override

SEALING CAP

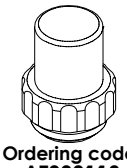

Ordering code:
AT000113

ORDERING CODES

Quick code	Description	Options	Max operating pressure (bar)	
CE000277	CEBN-070-NAFN-32-S10-N350	Standard	350	
CE000278	CEBN-070-NAFP-32-S10-N350	Push style override	350	
CE000279	CEBN-070-NAFK-32-S10-N350	Knob style override	350	
CE000577	CEBN-070-NAFN-32-S10-N500	Standard	500	
CE000578	CEBN-070-NAFP-32-S10-N500	Push style override	500	
CE000579	CEBN-070-NAFK-32-S10-N500	Knob style override	500	

SOLENOID OPERATED CARTRIDGE

CEBN-100-NAFN

PILOT OPERATED POPPET TYPE

ATLANTIC Fluid Tech

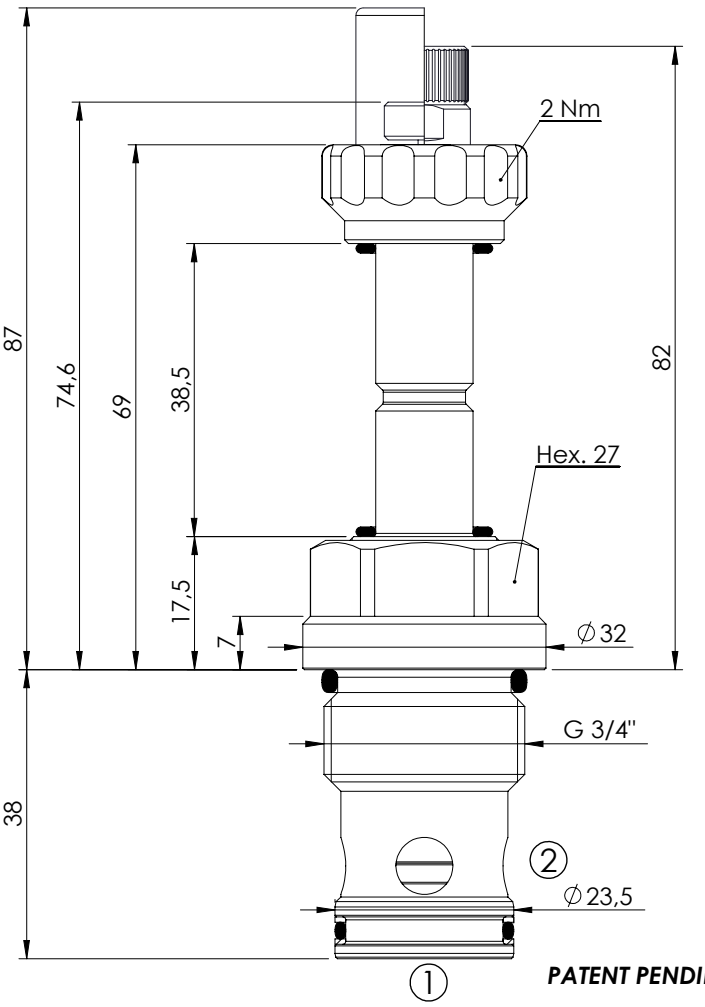

PATENT PENDING

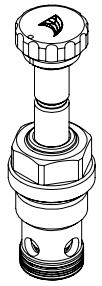

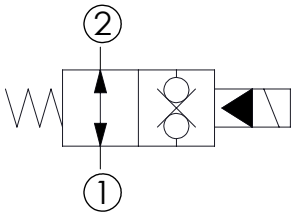

SPECIFICATIONS

Max. operating pressure:	350/500 bar
Rated flow:	100 l/min
Cavity:	VP000057
Weight:	0,25 kg
Min. voltage required:	90% of nominal
Coil type:	M7 type
Seal kit:	RD900057

NOTES

Installation torque: 110 - 130 Nm

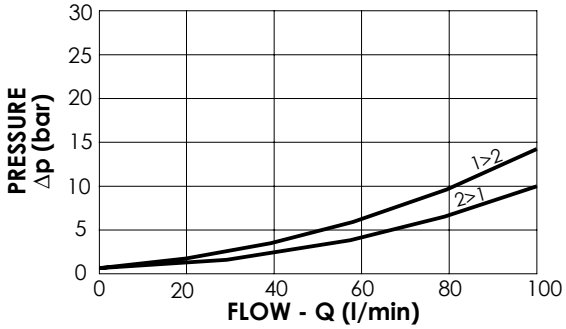

OPTIONS

Standard

Push style override

Knob style override

SEALING CAP

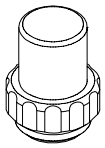

Ordering code: AT000113

ORDERING CODES

Quick code	Description	Options	Max operating pressure (bar)	
CE000312	CEBN-100-NAFN-32-057-N350	Standard	350	
CE000313	CEBN-100-NAFP-32-057-N350	Push style override	350	
CE000314	CEBN-100-NAFK-32-057-N350	Knob style override	350	
CE000612	CEBN-100-NAFN-32-057-N500	Standard	500	
CE000613	CEBN-100-NAFP-32-057-N500	Push style override	500	
CE000614	CEBN-100-NAFK-32-057-N500	Knob style override	500	

SOLENOID OPERATED CARTRIDGE

CEBN-180-NAFN

PILOT OPERATED POPPET TYPE

ATLANTIC Fluid Tech

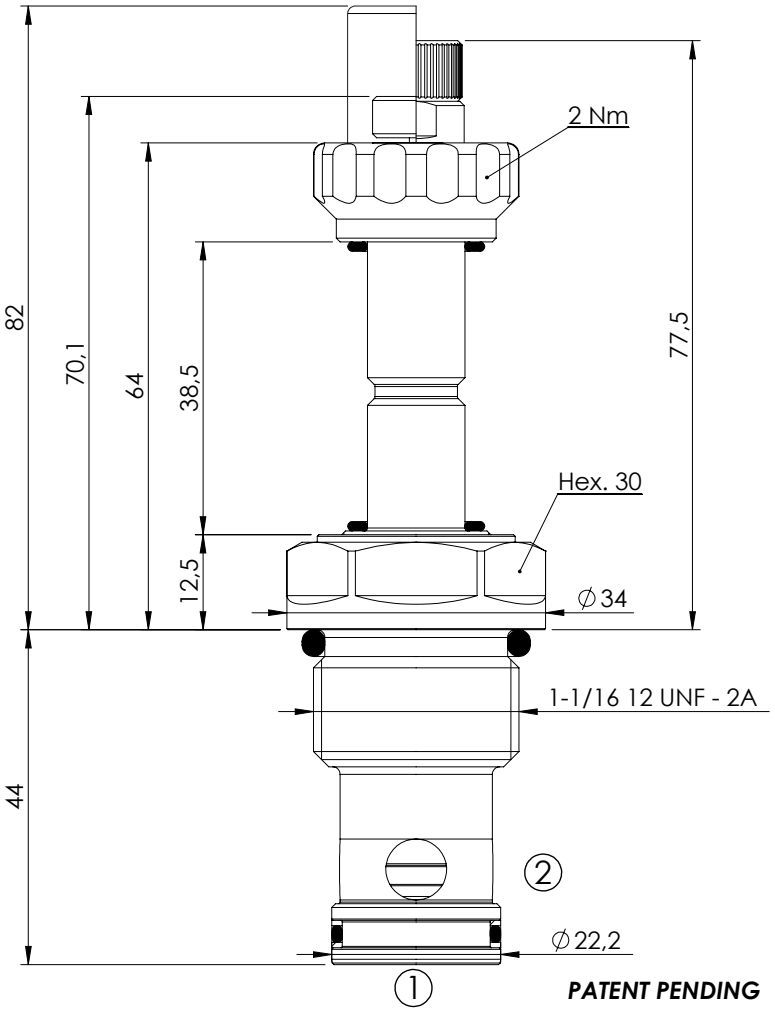

PATENT PENDING

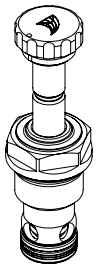

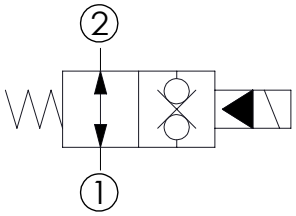

SPECIFICATIONS

Max. operating pressure:	350/500 bar
Rated flow:	180 l/min
Cavity:	SAE-12-2N
Weight:	0,25 kg
Min. voltage required:	90% of nominal
Coil type:	M7 type
Seal kit:	RB900083

NOTES

Installation torque:	135 - 150 Nm

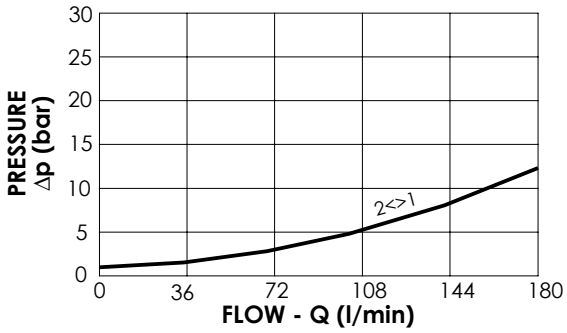

OPTIONS

Standard

Push style override

Knob style override

SEALING CAP

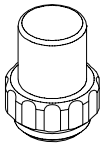

Ordering code:
AT000113

ORDERING CODES

Quick code	Description	Options	Max operating pressure (bar)	
CE000347	CEBN-180-NAFN-32-S12-N350	Standard	350	
CE000348	CEBN-180-NAFP-32-S12-N350	Push style override	350	
CE000349	CEBN-180-NAFK-32-S12-N350	Knob style override	350	
CE000647	CEBN-180-NAFN-32-S12-N500	Standard	500	
CE000648	CEBN-180-NAFP-32-S12-N500	Push style override	500	
CE000649	CEBN-180-NAFK-32-S12-N500	Knob style override	500	

SOLENOID OPERATED CARTRIDGE

CEBN-200-NAFN

PILOT OPERATED POPPET TYPE

ATLANTIC Fluid Tech

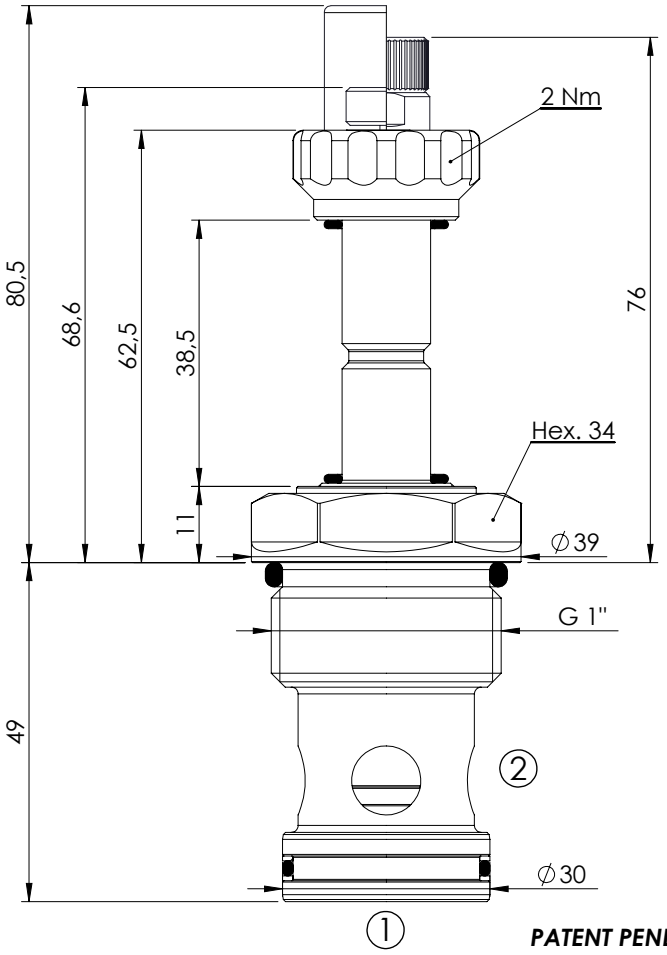

PATENT PENDING

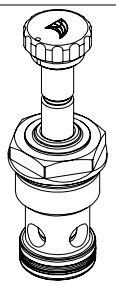

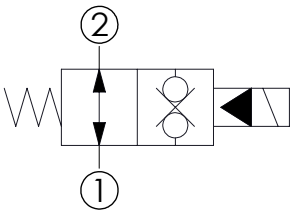

SPECIFICATIONS

Max. operating pressure:	350/500 bar
Rated flow:	200 l/min
Cavity:	VP000013
Weight:	0,35 kg
Min. voltage required:	90% of nominal
Coil type:	M7 type
Seal kit:	RD900013

NOTES

Installation torque:	135 - 150 Nm

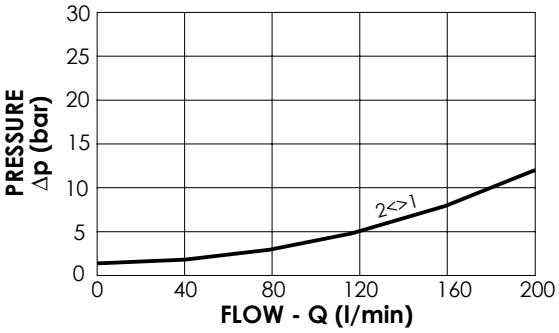

OPTIONS

Standard

Push style override

Knob style override

SEALING CAP

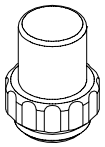

Ordering code: AT000113

ORDERING CODES

Quick code	Description	Options	Max operating pressure (bar)	
CE000382	CEBN-200-NAFN-32-013-N350	Standard	350	
CE000383	CEBN-200-NAFP-32-013-N350	Push style override	350	
CE000384	CEBN-200-NAFK-32-013-N350	Knob style override	350	
CE000682	CEBN-200-NAFN-32-013-N500	Standard	500	
CE000683	CEBN-200-NAFP-32-013-N500	Push style override	500	
CE000684	CEBN-200-NAFK-32-013-N500	Knob style override	500	

SOLENOID OPERATED CARTRIDGE

CEBN-300-NAFN

PILOT OPERATED POPPET TYPE

ATLANTIC Fluid Tech

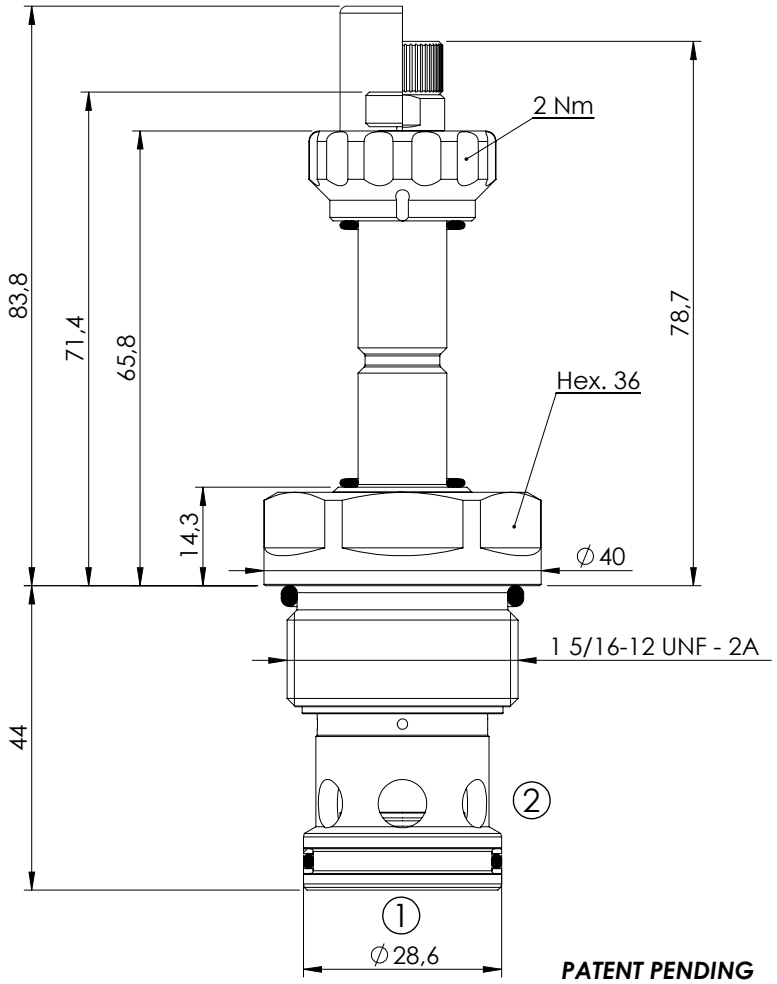

PATENT PENDING

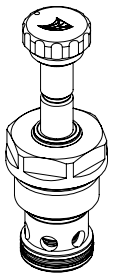

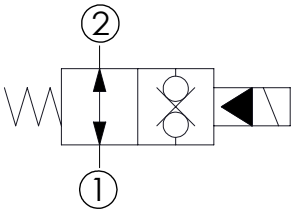

SPECIFICATIONS

Max. operating pressure:	350/500 bar
Rated flow:	300 l/min
Cavity:	SAE-16-2N
Weight:	0,36 kg
Min. voltage required:	90% of nominal
Coil type:	M7 type
Seal kit:	RB900084

NOTES

Installation torque:	118 - 132 Nm

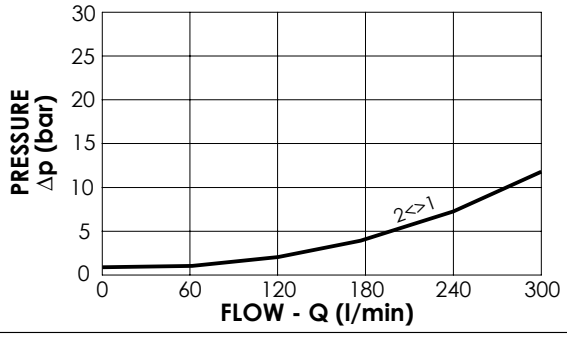

OPTIONS

Standard

Push style override

Knob style override

SEALING CAP

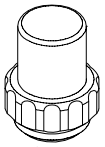

Ordering code:
AT000113

ORDERING CODES

Quick code	Description	Options	Max operating pressure (bar)	
CE000417	CEBN-300-NAFN-32-S16-N350	Standard	350	
CE000418	CEBN-300-NAFP-32-S16-N350	Push style override	350	
CE000419	CEBN-300-NAFK-32-S16-N350	Knob style override	350	
CE000717	CEBN-300-NAFN-32-S16-N500	Standard	500	
CE000718	CEBN-300-NAFP-32-S16-N500	Push style override	500	
CE000719	CEBN-300-NAFK-32-S16-N500	Knob style override	500	

SOLENOID OPERATED CARTRIDGE

CEBN-040-NCDR

POPPET TYPE PROXIMITY SENSOR

ATLANTIC Fluid Tech

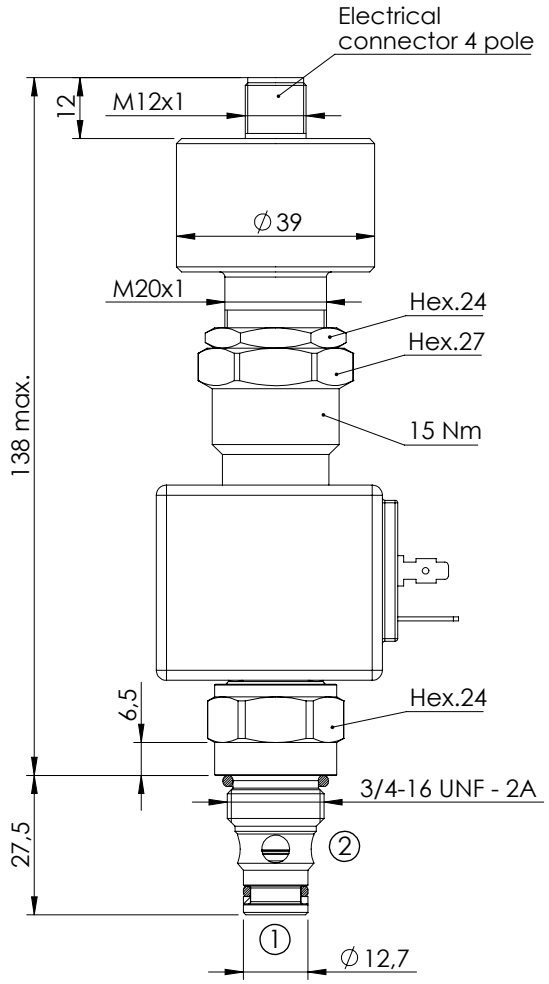

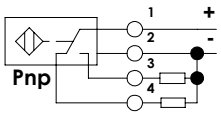

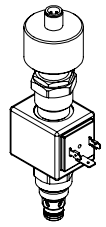

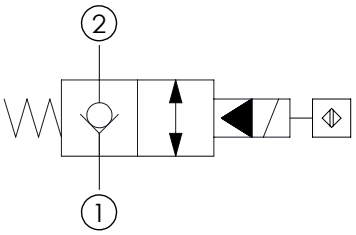

SPECIFICATIONS

Max. operating pressure:	350 bar
Rated flow:	40 l/min
Cavity:	SAE-08-2N
Weight:	0,5 kg
Coil type:	M7 type
Operating temperature:	-25/+80°C

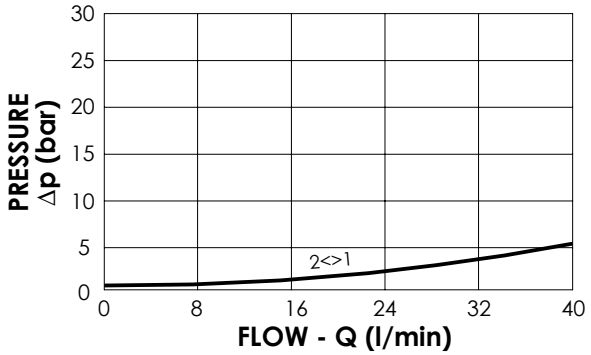

NOTES

Installation torque:	45 - 50 Nm
Seal kit:	RA100081

ORDERING CODES

Quick code	Description	Connector	Voltage	Options
CE000472	CEBN-040-NCDR-100-S08-V350-12HR	DIN 43650	12V DC	Proximity sensor
CE000940	CEBN-040-NCDR-100-S08-V350-24HR	DIN 43650	24V DC	Proximity sensor

SOLENOID OPERATED CARTRIDGE

CEBN-070-NCDR

POPPET TYPE PROXIMITY SENSOR

ATLANTIC Fluid Tech

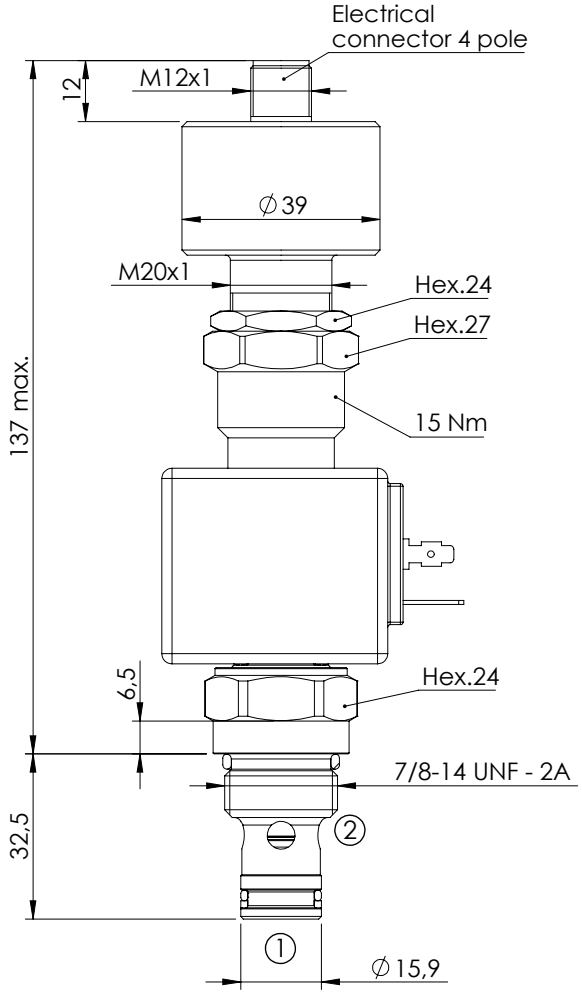

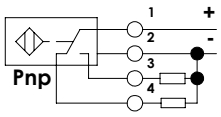

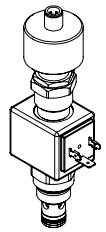

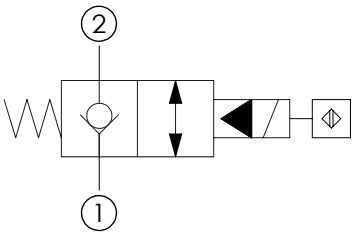

SPECIFICATIONS

Max. operating pressure:	350 bar
Rated flow:	70 l/min
Cavity:	SAE-10-2N
Weight:	0,5 kg
Coil type:	M7 type
Operating temperature:	-25/+80°C

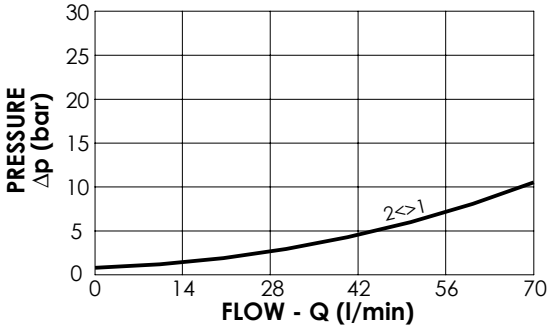

NOTES

Installation torque:	55 - 62 Nm
Seal kit:	RA100082

ORDERING CODES

Quick code	Description	Connector	Voltage	Options
CE000473	CEBN-070-NCDR-100-S10-V350-12HR	DIN 43650	12V DC	Proximity sensor
CE000938	CEBN-070-NCDR-100-S10-V350-24HR	DIN 43650	24V DC	Proximity sensor

SOLENOID OPERATED CARTRIDGE

CEBN-100-NCDR

POPPET TYPE PROXIMITY SENSOR

ATLANTIC Fluid Tech

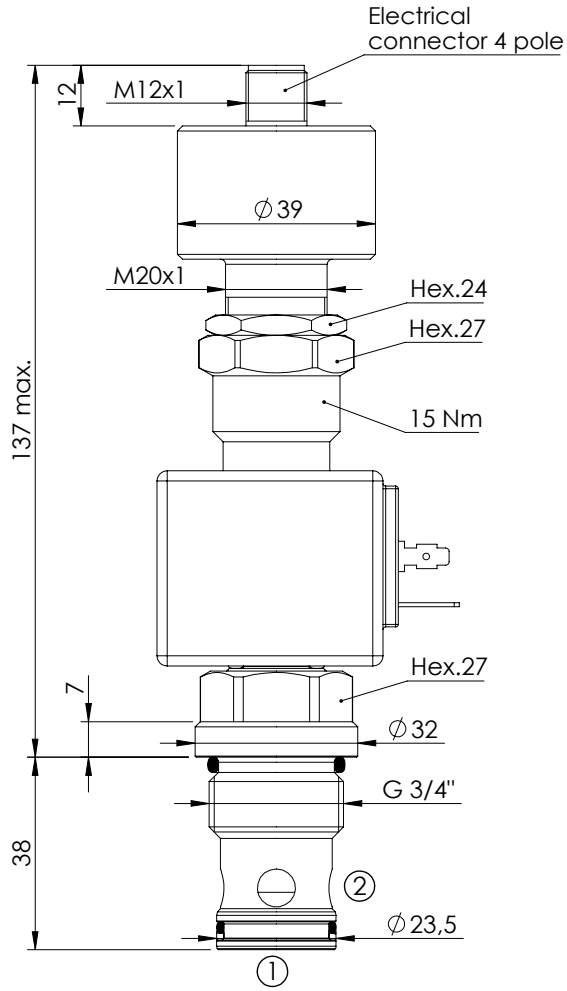

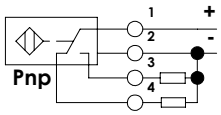

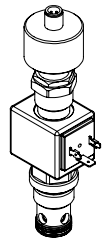

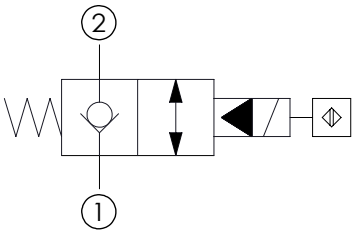

SPECIFICATIONS

Max. operating pressure:	350 bar
Rated flow:	100 l/min
Cavity:	VP000057
Weight:	0,6 kg
Coil type:	M7 type
Operating temperature:	-25/+80°C

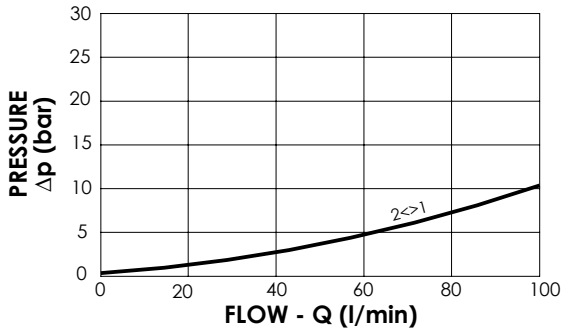

NOTES

Installation torque:	110 - 130 Nm
Seal kit:	RC100057

ORDERING CODES

Quick code	Description	Connector	Voltage	Options
CE001088	CEBN-100-NCDR-100-057-V350-12HR	DIN 43650	12V DC	Proximity sensor
CE001089	CEBN-100-NCDR-100-057-V350-24HR	DIN 43650	24V DC	Proximity sensor

SOLENOID OPERATED CARTRIDGE

CEBN-180-NCFN

POPPET TYPE PROXIMITY SENSOR

ATLANTIC Fluid Tech

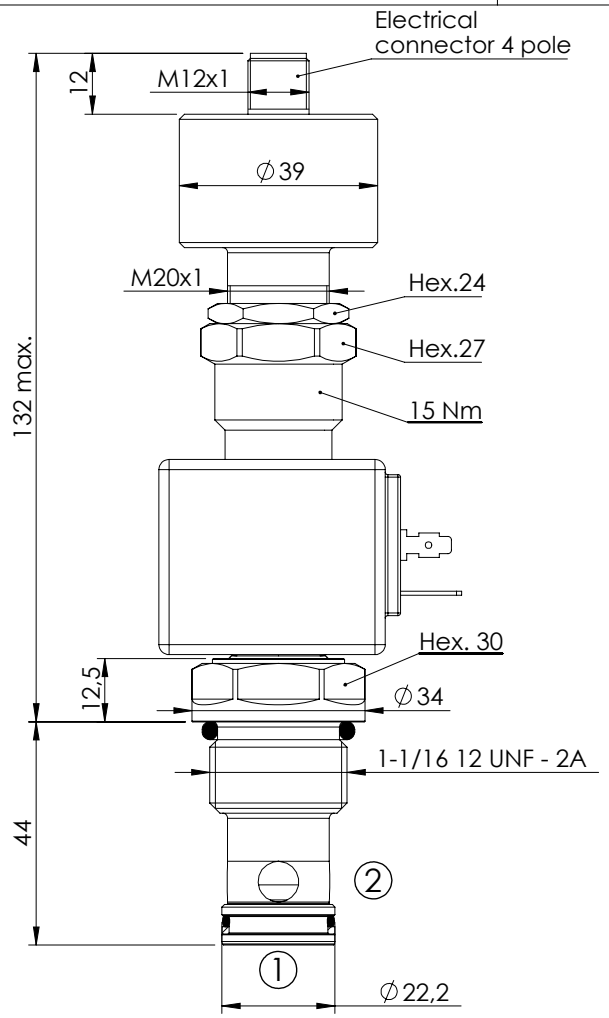

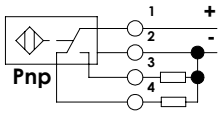

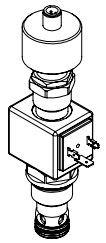

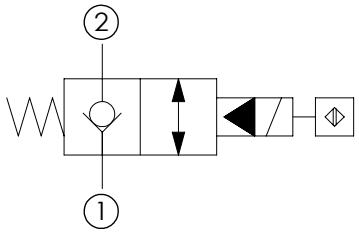

SPECIFICATIONS

Max. operating pressure:	350 bar
Rated flow:	180 l/min
Cavity:	SAE-12-2N
Weight:	0,6 kg
Coil type:	M7 type
Operating temperature:	-25/+80°C

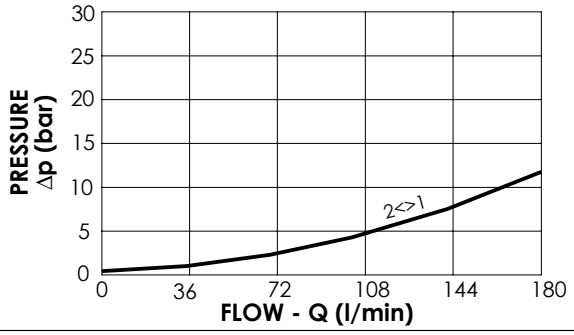

NOTES

Installation torque:	135 - 150 Nm
Seal kit:	RA100083

ORDERING CODES

Quick code	Description	Connector	Voltage	Options
CE001090	CEBN-180-NCFN-100-S12-V350-12HR	DIN 43650	12V DC	Proximity sensor
CE001091	CEBN-180-NCFK-100-S12-V350-24HR	DIN 43650	24V DC	Proximity sensor

SOLENOID OPERATED CARTRIDGE

CEBN-200-NCFN

POPPET TYPE PROXIMITY SENSOR

ATLANTIC Fluid Tech

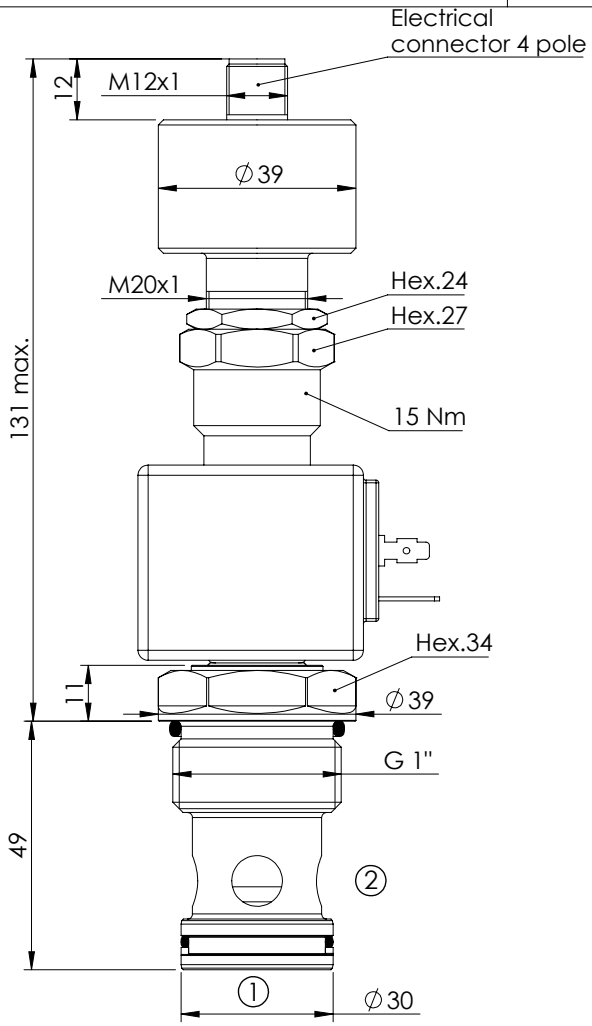

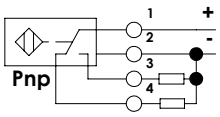

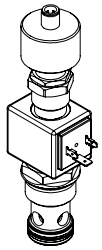

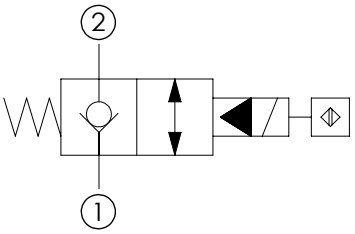

SPECIFICATIONS

Max. operating pressure:	350 bar
Rated flow:	200 l/min
Cavity:	VP000013
Weight:	0,71 kg
Coil type:	M7 type
Operating temperature:	-25/+80°C

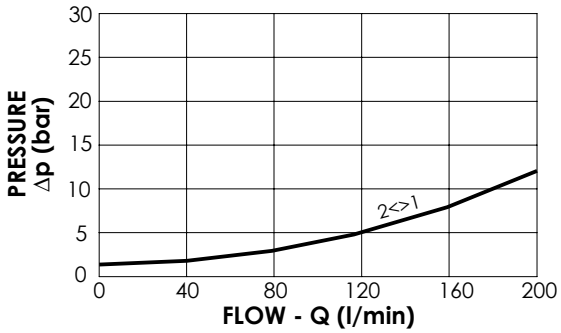

NOTES

Installation torque:	
Seal kit:	RC100013

ORDERING CODES

Quick code	Description	Connector	Voltage	Options
CE001092	CEBN-200-NCFN-100-013-V350-12HR	DIN 43650	12V DC	Proximity sensor
CE001093	CEBN-200-NCFK-100-013-V350-24HR	DIN 43650	24V DC	Proximity sensor

SOLENOID OPERATED CARTRIDGE

CEBN-300-NCDR

POPPET TYPE PROXIMITY SENSOR

ATLANTIC Fluid Tech

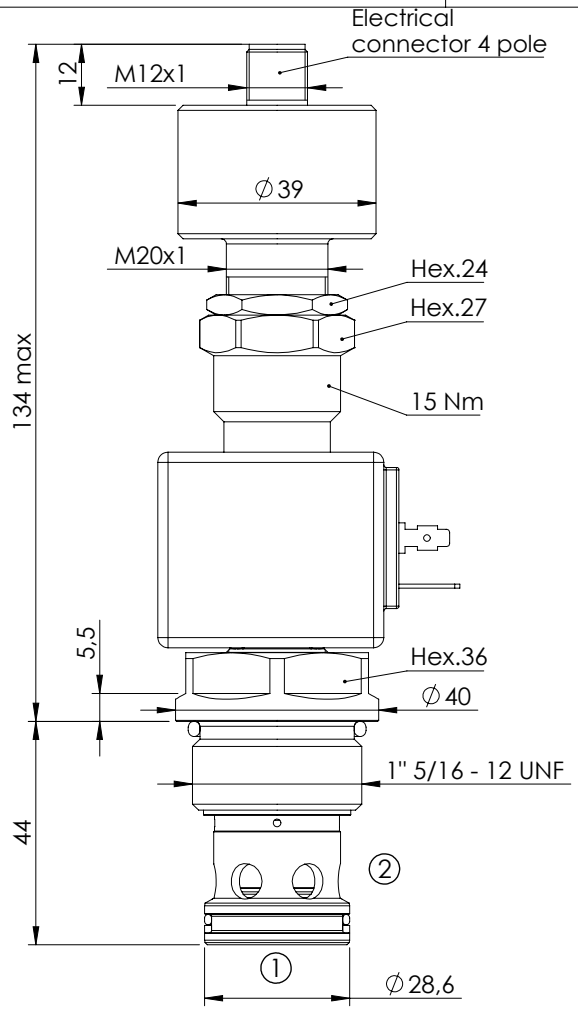

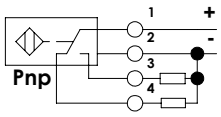

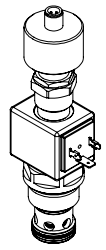

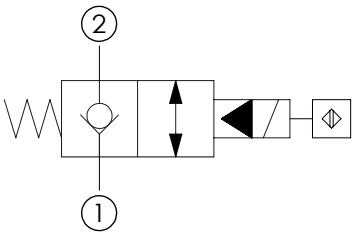

SPECIFICATIONS

Max. operating pressure:	350 bar
Rated flow:	300 l/min
Cavity:	SAE-16-2N
Weight:	0,7 kg
Coil type:	M7 type
Operating temperature:	-25/+80 °C

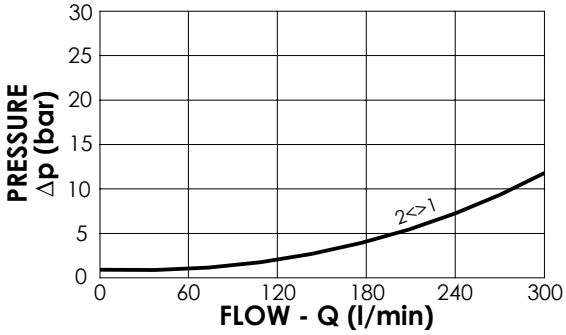

NOTES

Installation torque:	118 - 132 Nm
Seal kit:	RA100084

ORDERING CODES

Quick code	Description	Connector	Voltage	Options
CE000475	CEBN-300-NCDR-100-S16-V350-12HR	DIN 43650	12V DC	Proximity sensor
CE000939	CEBN-300-NCDR-100-S16-V350-24HR	DIN 43650	24V DC	Proximity sensor

SOLENOID OPERATED CARTRIDGE

CEBN-040-NADR

POPPET TYPE PROXIMITY SENSOR

ATLANTIC Fluid Tech

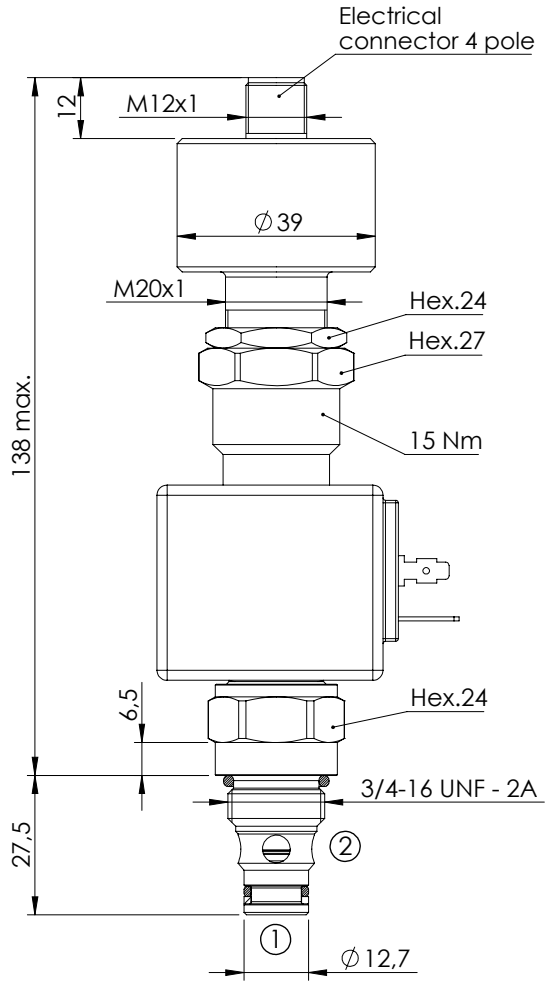

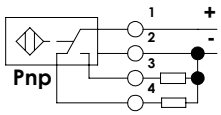

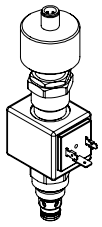

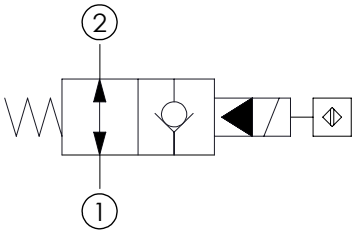

SPECIFICATIONS

Max. operating pressure:	350 bar
Rated flow:	40 l/min
Cavity:	SAE-08-2N
Weight:	0,5 kg
Coil type:	M7 type
Operating temperature:	-25/+80°C

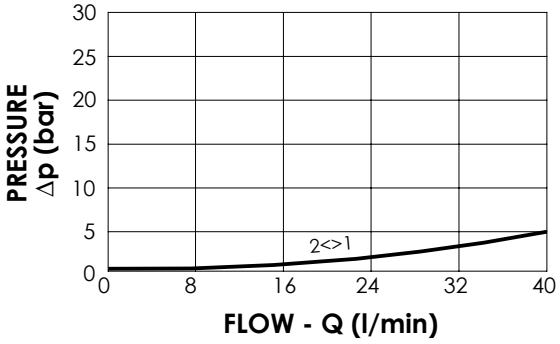

NOTES

Installation torque:	45 - 50 Nm
Seal kit:	RA100081

ORDERING CODES

Quick code	Description	Connector	Voltage	Options
CE001053	CEBN-040-NADR-101-S08-V350-12HR	DIN 43650	12V DC	Proximity sensor
CE000476	CEBN-040-NADR-101-S08-V350-24HR	DIN 43650	24V DC	Proximity sensor

SOLENOID OPERATED CARTRIDGE

CEBN-070-NADR

POPPET TYPE PROXIMITY SENSOR

ATLANTIC Fluid Tech

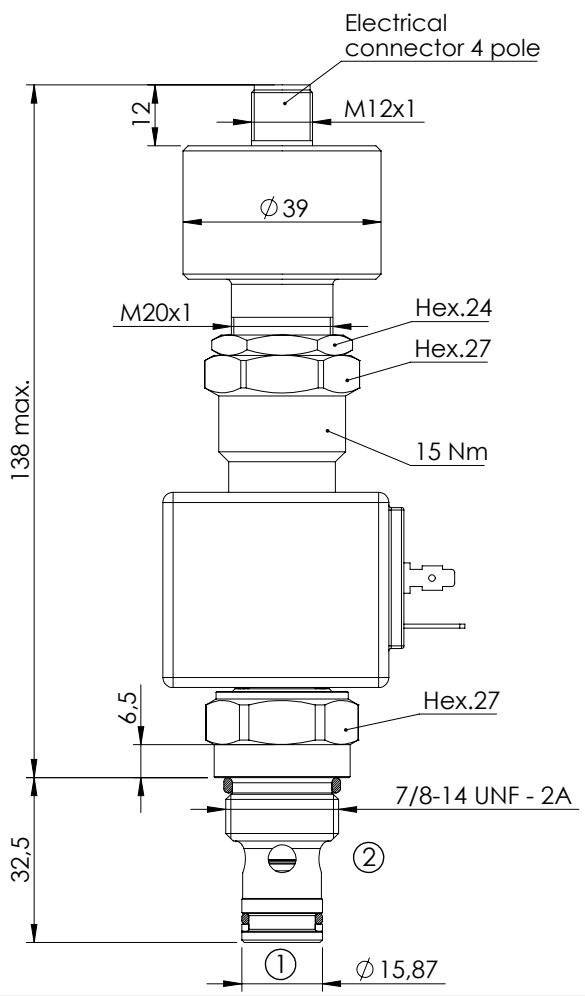

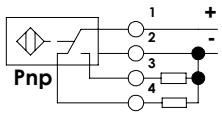

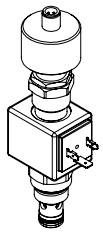

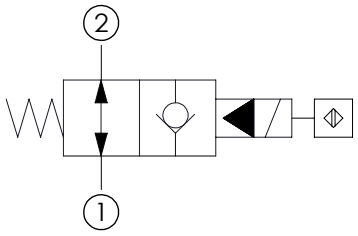

SPECIFICATIONS

Max. operating pressure:	350 bar
Rated flow:	70 l/min
Cavity:	SAE-10-2N
Weight:	0,5 kg
Coil type:	M7 type
Operating temperature:	-25/+80°C

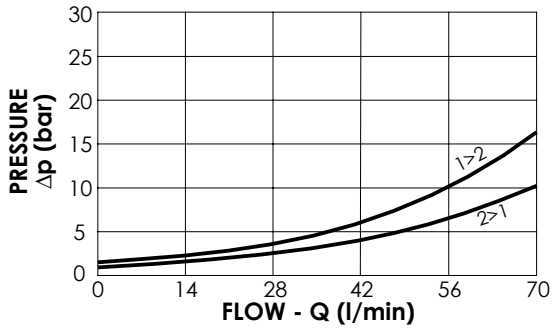

NOTES

Installation torque:	55 - 62 Nm
Seal kit:	RA100082

ORDERING CODES

Quick code	Description	Connector	Voltage	Options
CE001043	CEBN-070-NADR-101-S10-V350-12HR	DIN 43650	12V DC	Proximity sensor
CE001065	CEBN-070-NADR-101-S10-V350-24HR	DIN 43650	24V DC	Proximity sensor

SOLENOID OPERATED CARTRIDGE

CEBN-100-NAFN

POPPET TYPE PROXIMITY SENSOR

ATLANTIC Fluid Tech

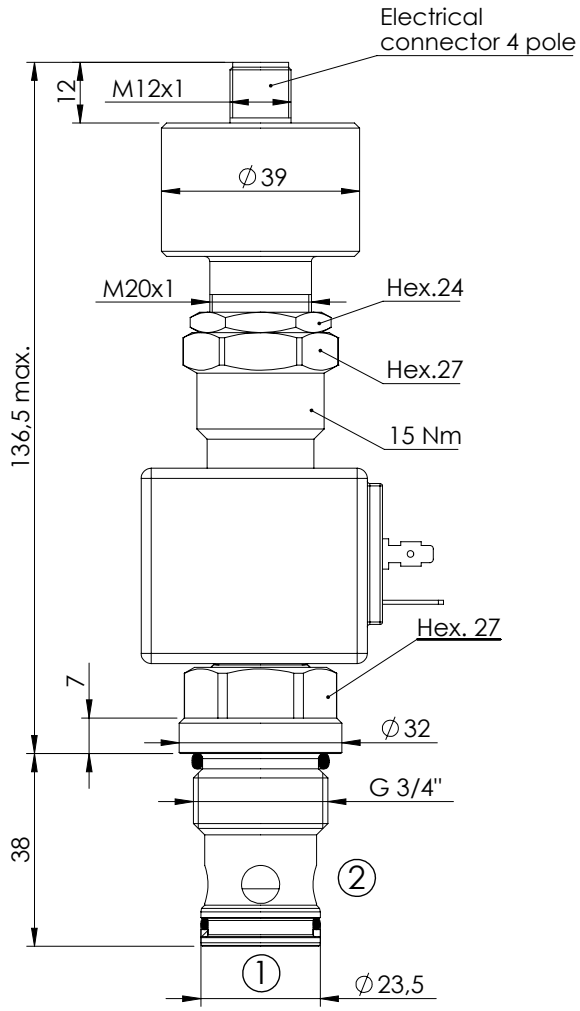

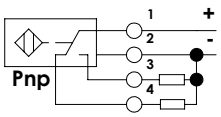

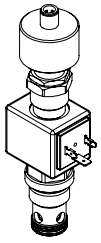

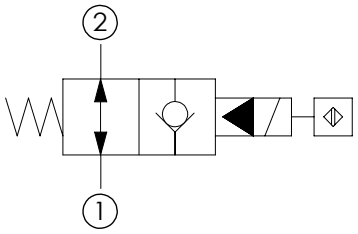

SPECIFICATIONS

Max. operating pressure:	350 bar
Rated flow:	100 l/min
Cavity:	VP000057
Weight:	0,6 kg
Coil type:	M7 type
Operating temperature:	-25/+80°C

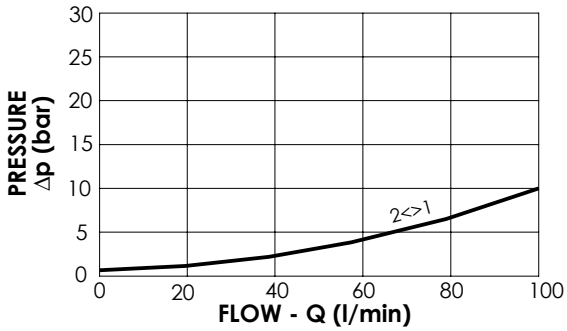

NOTES

Installation torque:	110 - 130 Nm
Seal kit:	RC100057

ORDERING CODES

Quick code	Description	Connector	Voltage	Options
CE001094	CEBN-100-NAFN-101-057-V350-12HR	DIN 43650	12V DC	Proximity sensor
CE001095	CEBN-100-NAFN-101-057-V350-24HR	DIN 43650	24V DC	Proximity sensor

SOLENOID OPERATED CARTRIDGE

CEBN-180-NAFN

POPPET TYPE PROXIMITY SENSOR

ATLANTIC Fluid Tech

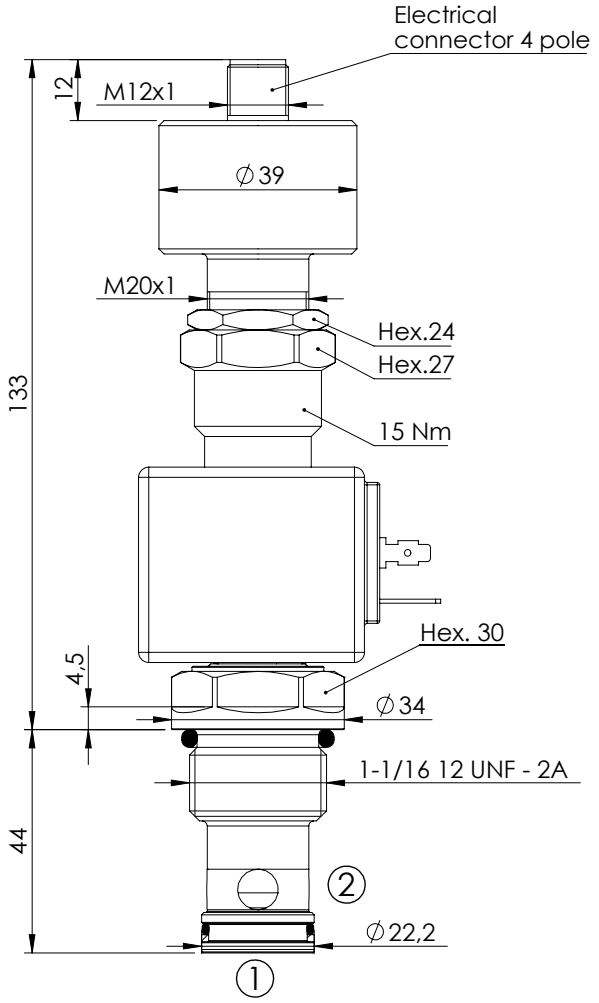

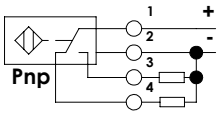

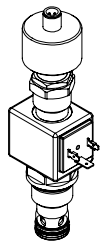

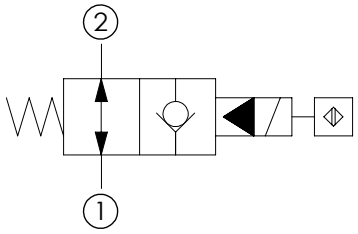

SPECIFICATIONS

Max. operating pressure:	350 bar
Rated flow:	180 l/min
Cavity:	SAE-12-2N
Weight:	0,6 kg
Coil type:	M7 type
Operating temperature:	-25/+80°C

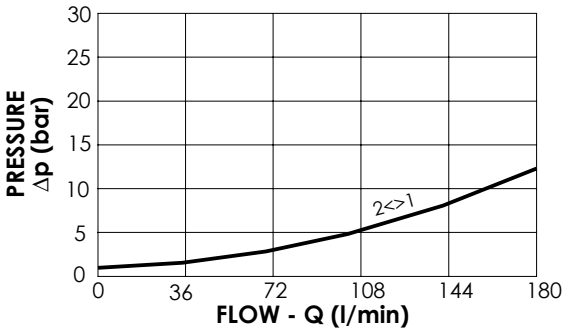

NOTES

Installation torque:	135 - 150 Nm
Seal kit:	RA100083

ORDERING CODES

Quick code	Description	Connector	Voltage	Options
CE001096	CEBN-180-NAFN-101-S12-V350-12HR	DIN 43650	12V DC	Proximity sensor
CE001097	CEBN-180-NAFN-101-S12-V350-24HR	DIN 43650	24V DC	Proximity sensor

SOLENOID OPERATED CARTRIDGE

CEBN-200-NAFN

POPPET TYPE PROXIMITY SENSOR

ATLANTIC Fluid Tech

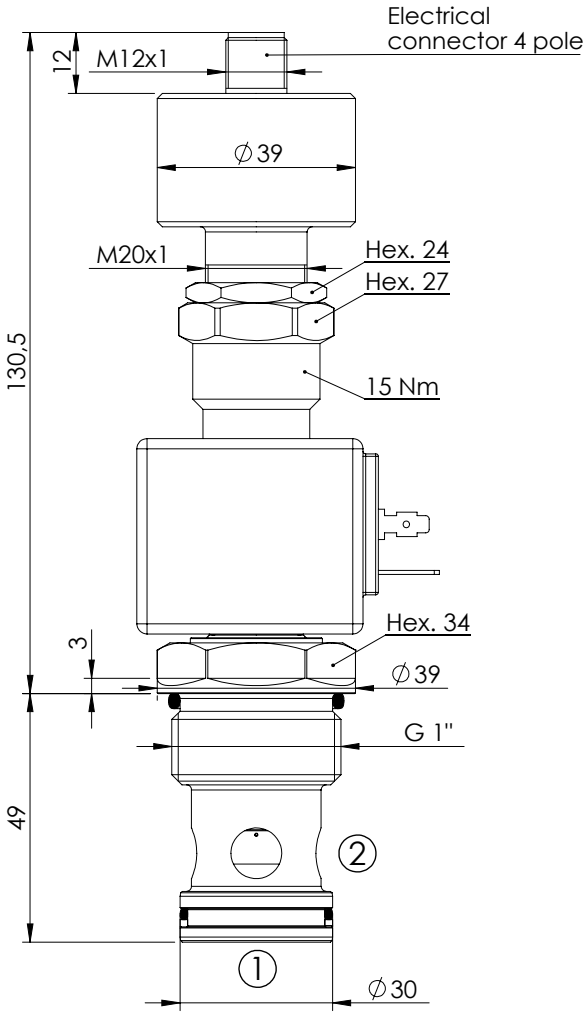

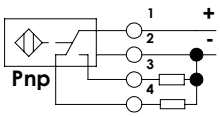

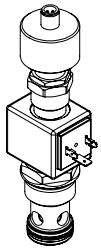

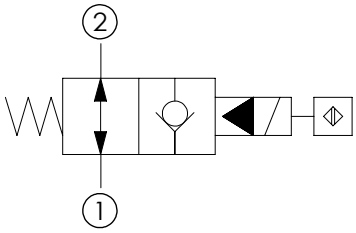

SPECIFICATIONS

Max. operating pressure:	350 bar
Rated flow:	200 l/min
Cavity:	VP000013
Weight:	0,71 kg
Coil type:	M7 type
Operating temperature:	-25/+80°C

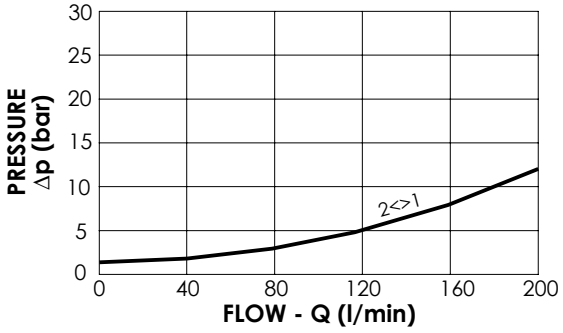

NOTES

Installation torque:	135 - 150 Nm
Seal kit:	RC100013

ORDERING CODES

Quick code	Description	Connector	Voltage	Options
CE001098	CEBN-200-NAFN-101-013-V350-12HR	DIN 43650	12V DC	Proximity sensor
CE001099	CEBN-200-NAFN-101-013-V350-24HR	DIN 43650	24V DC	Proximity sensor

SOLENOID OPERATED CARTRIDGE

CEBN-300-NADR

POPPET TYPE PROXIMITY SENSOR

ATLANTIC Fluid Tech

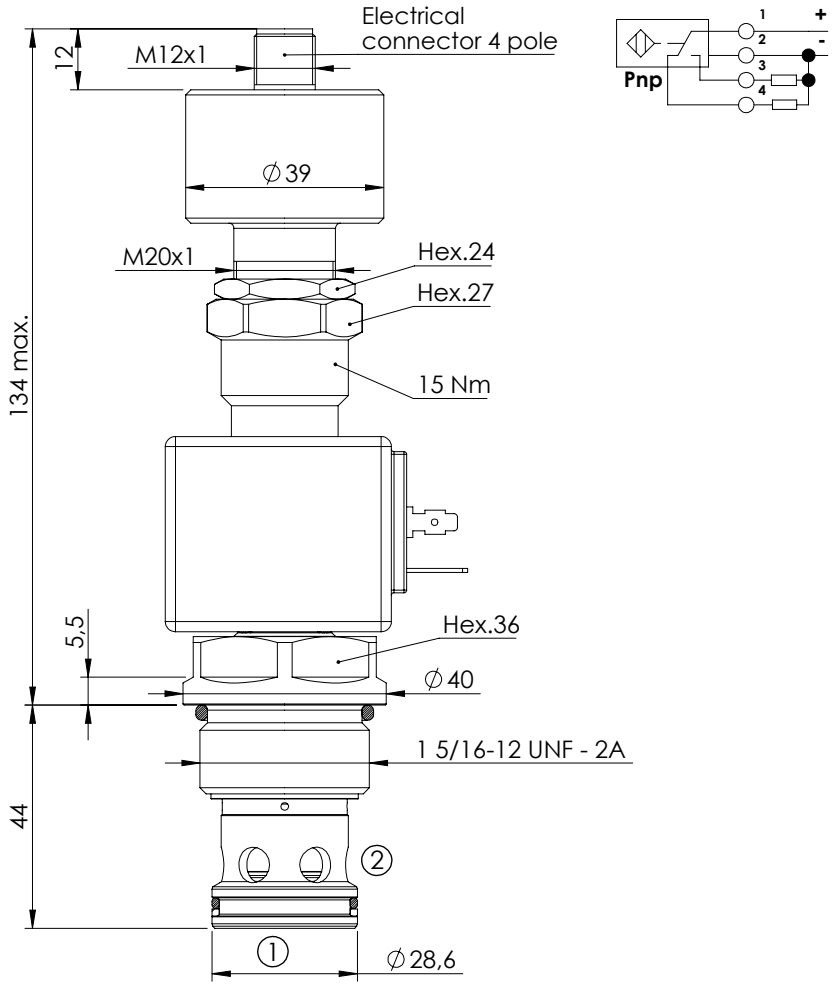

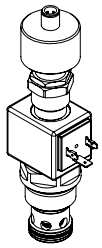

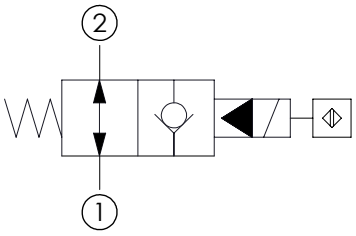

SPECIFICATIONS

Max. operating pressure:	350 bar
Rated flow:	300 l/min
Cavity:	SAE-16-2N
Weight:	0,7 kg
Coil type:	M7 type
Operating temperature:	-25/+80°C

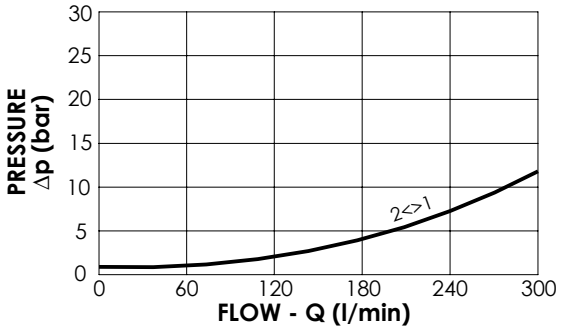

NOTES

Installation torque:	118 - 132 Nm
Seal kit:	RA100084

ORDERING CODES

Quick code	Description	Connector	Voltage	Options
CE001044	CEBN-300-NADR-101-S16-V350-12HR	DIN 43650	12V DC	Proximity sensor
CE001066	CEBN-300-NADR-101-S16-V350-24HR	DIN 43650	24V DC	Proximity sensor

SOLENOID OPERATED CARTRIDGE

CEBN-040-NCDR

POPPET TYPE PROXIMITY SENSOR

ATLANTIC Fluid Tech

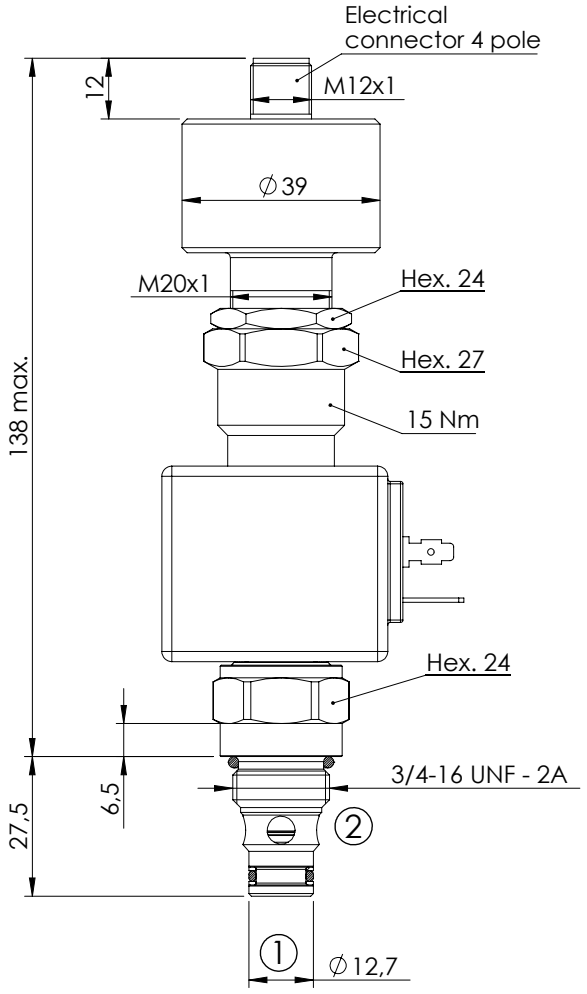

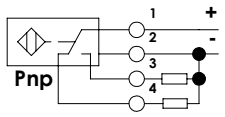

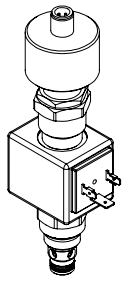

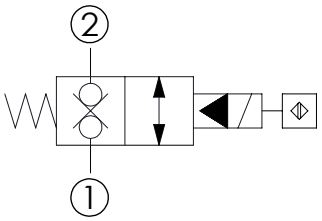

SPECIFICATIONS

Max. operating pressure:	350 bar
Rated flow:	40 l/min
Cavity:	SAE-08-2N
Weight:	0,5 kg
Coil type:	M7 type
Operating temperature:	-25/+80°C

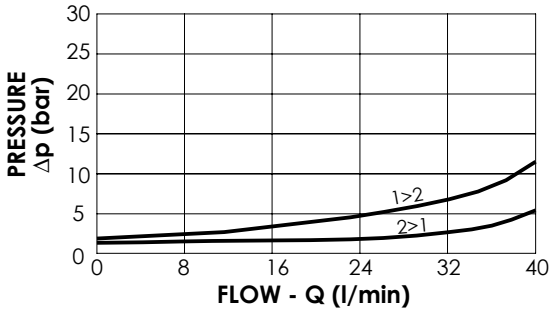

NOTES

Installation torque:	45 - 50 Nm
Seal kit:	RB100081

ORDERING CODES

Quick code	Description	Connector	Voltage	Options
CE001035	CEBN-040-NCDR-120-S08-V350-12HR	DIN 43650	12V DC	Proximity sensor
CE001064	CEBN-040-NCDR-120-S08-V350-24HR	DIN 43650	24V DC	Proximity sensor

SOLENOID OPERATED CARTRIDGE

CEBN-070-NCDR

POPPET TYPE PROXIMITY SENSOR

ATLANTIC Fluid Tech

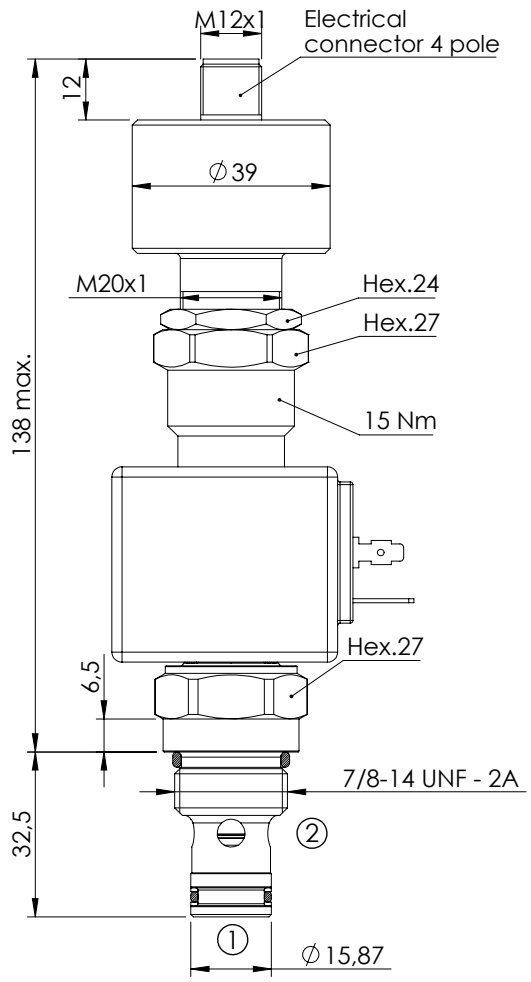

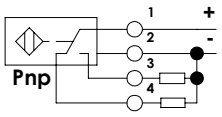

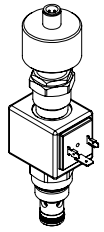

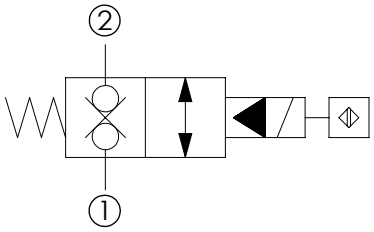

SPECIFICATIONS

Max. operating pressure:	350 bar
Rated flow:	70 l/min
Cavity:	SAE-10-2N
Weight:	0,53 kg
Coil type:	M7 type
Operating temperature:	-25/+80°C

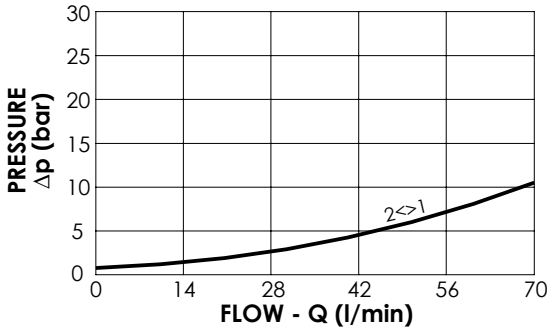

NOTES

Installation torque:	55 - 62 Nm
Seal kit:	RB100082

ORDERING CODES

Quick code	Description	Connector	Voltage	Options
CE001045	CEBN-070-NCDR-120-S10-V350-12HR	DIN 43650	12V DC	Proximity sensor
CE001067	CEBN-070-NCDR-120-S10-V350-24HR	DIN 43650	24V DC	Proximity sensor

SOLENOID OPERATED CARTRIDGE

CEBN-100-NCFN

POPPET TYPE PROXIMITY SENSOR

ATLANTIC Fluid Tech

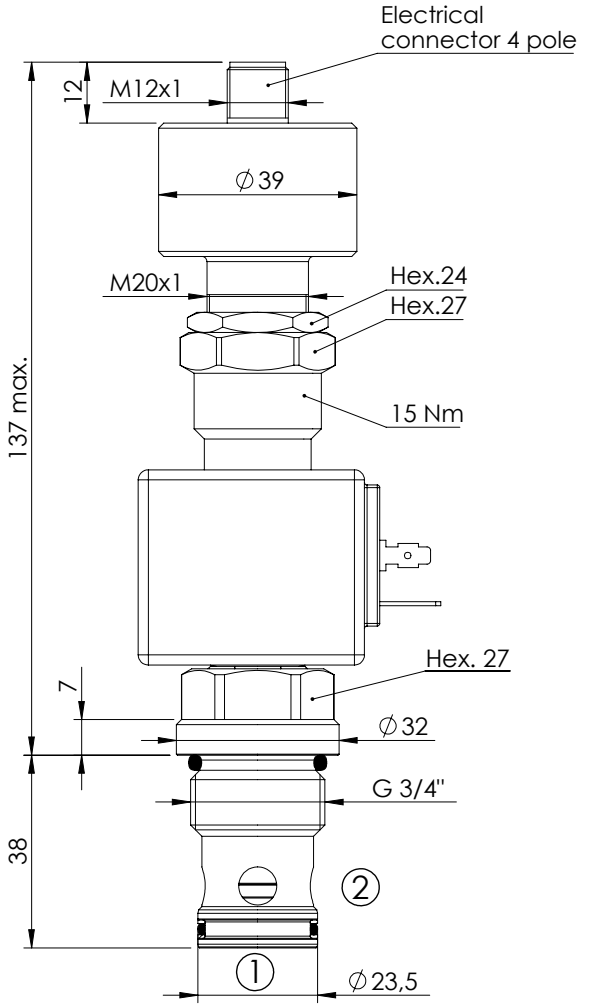

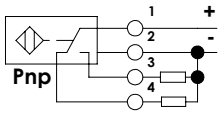

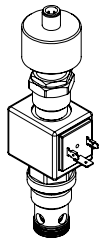

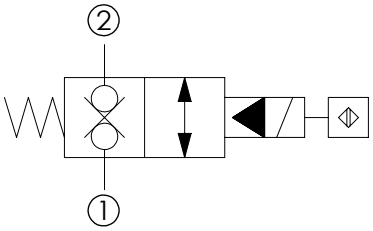

SPECIFICATIONS

Max. operating pressure:	350 bar
Rated flow:	100 l/min
Cavity:	VP000057
Weight:	0,6 kg
Coil type:	M7 type
Operating temperature:	-25/+80°C

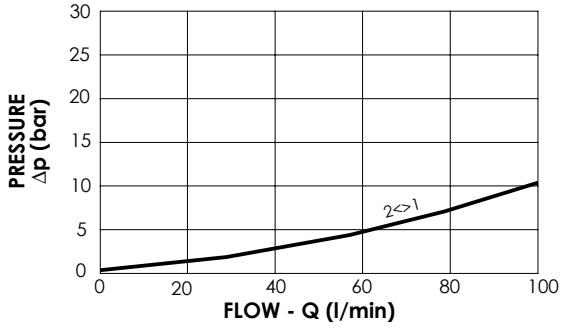

NOTES

Installation torque:	110 - 130 Nm
Seal kit:	RD100057

ORDERING CODES

Quick code	Description	Connector	Voltage	Options
CE001100	CEBN-100-NCFN-120-057-V350-12HR	DIN 43650	12V DC	Proximity sensor
CE001101	CEBN-100-NCFN-120-057-V350-24HR	DIN 43650	24V DC	Proximity sensor

SOLENOID OPERATED CARTRIDGE

CEBN-180-NCFN

POPPET TYPE PROXIMITY SENSOR

ATLANTIC Fluid Tech

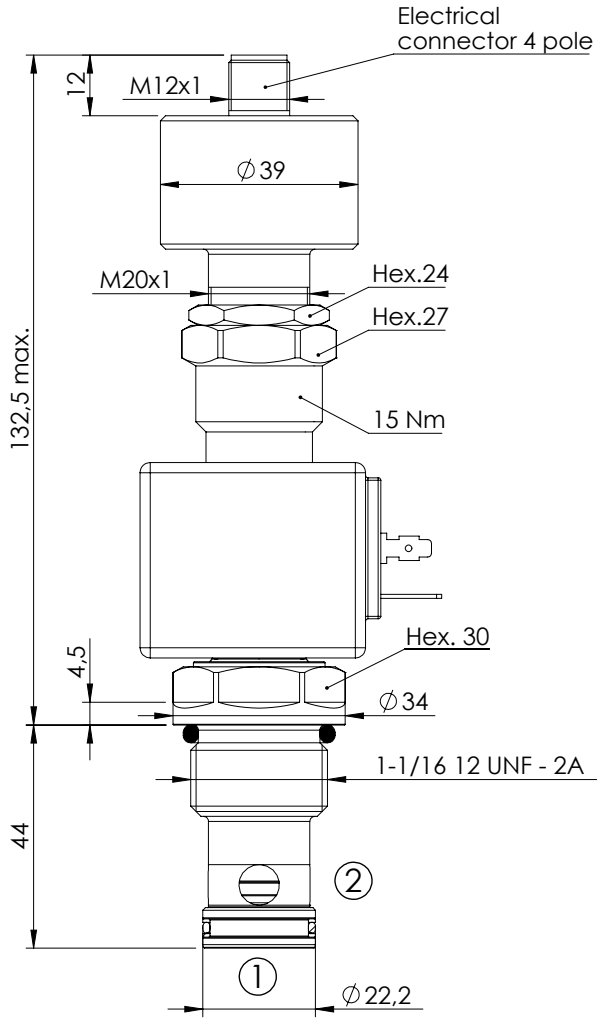

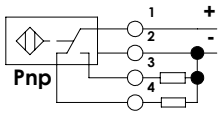

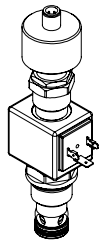

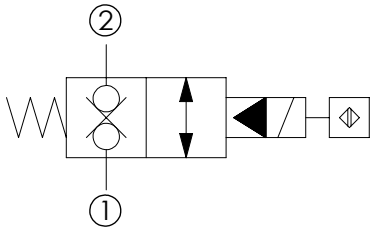

SPECIFICATIONS

Max. operating pressure:	350 bar
Rated flow:	180 l/min
Cavity:	SAE-12-2N
Weight:	0,6 kg
Coil type:	M7 type
Operating temperature:	-25/+80°C

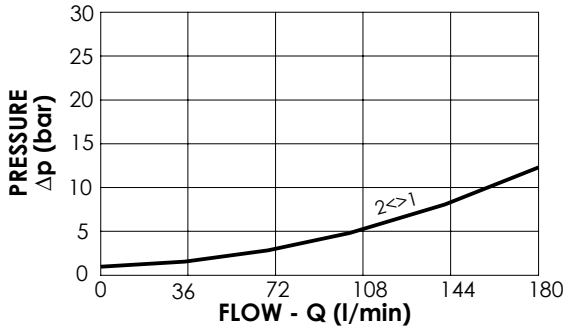

NOTES

Installation torque:	135 - 150 Nm
Seal kit:	RB100083

ORDERING CODES

Quick code	Description	Connector	Voltage	Options
CE001102	CEBN-180-NCFN-120-S12-V350-12HR	DIN 43650	12V DC	Proximity sensor
CE001103	CEBN-180-NCFN-120-S12-V350-24HR	DIN 43650	24V DC	Proximity sensor

SOLENOID OPERATED CARTRIDGE

CEBN-200-NCFN

POPPET TYPE PROXIMITY SENSOR

ATLANTIC Fluid Tech

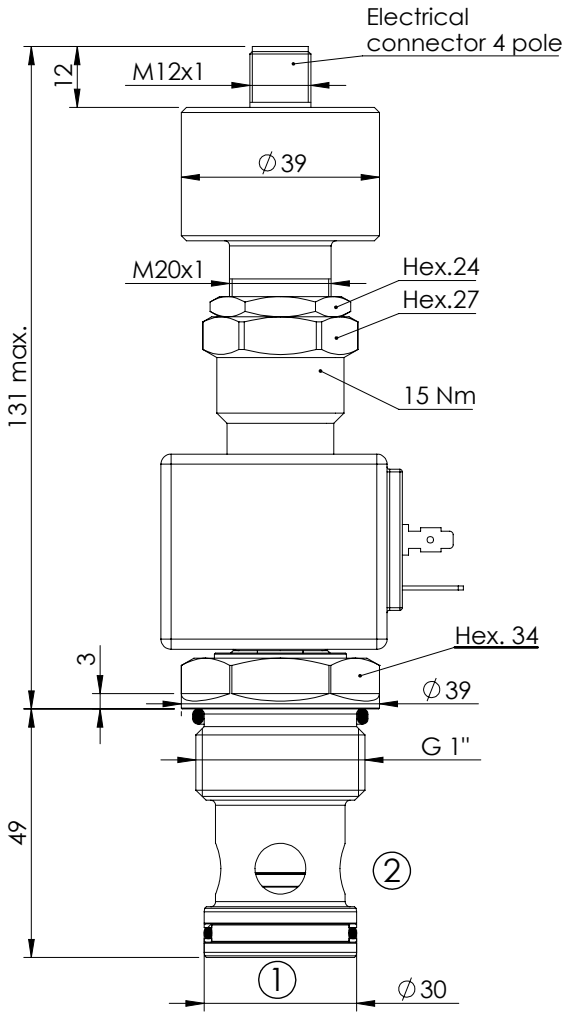

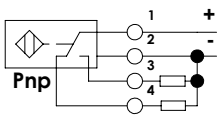

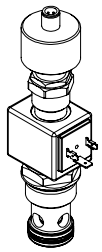

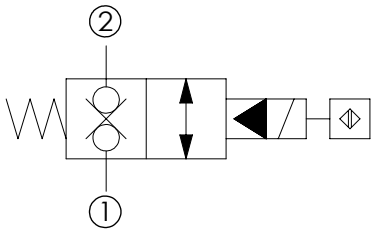

SPECIFICATIONS

Max. operating pressure:	350 bar
Rated flow:	200 l/min
Cavity:	VP000013
Weight:	0,7 kg
Coil type:	M7 type
Operating temperature:	-25/+80°C

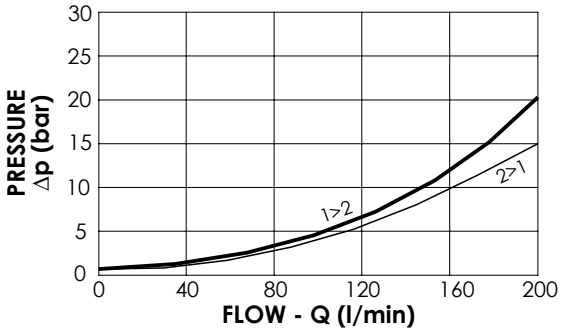

NOTES

Installation torque:	135 - 150 Nm
Seal kit:	RD100013

ORDERING CODES

Quick code	Description	Connector	Voltage	Options
CE001104	CEBN-200-NCFN-120-013-V350-12HR	DIN 43650	12V DC	Proximity sensor
CE001105	CEBN-200-NCFN-120-013-V350-24HR	DIN 43650	24V DC	Proximity sensor

SOLENOID OPERATED CARTRIDGE

CEBN-300-NCDR

POPPET TYPE PROXIMITY SENSOR

ATLANTIC Fluid Tech

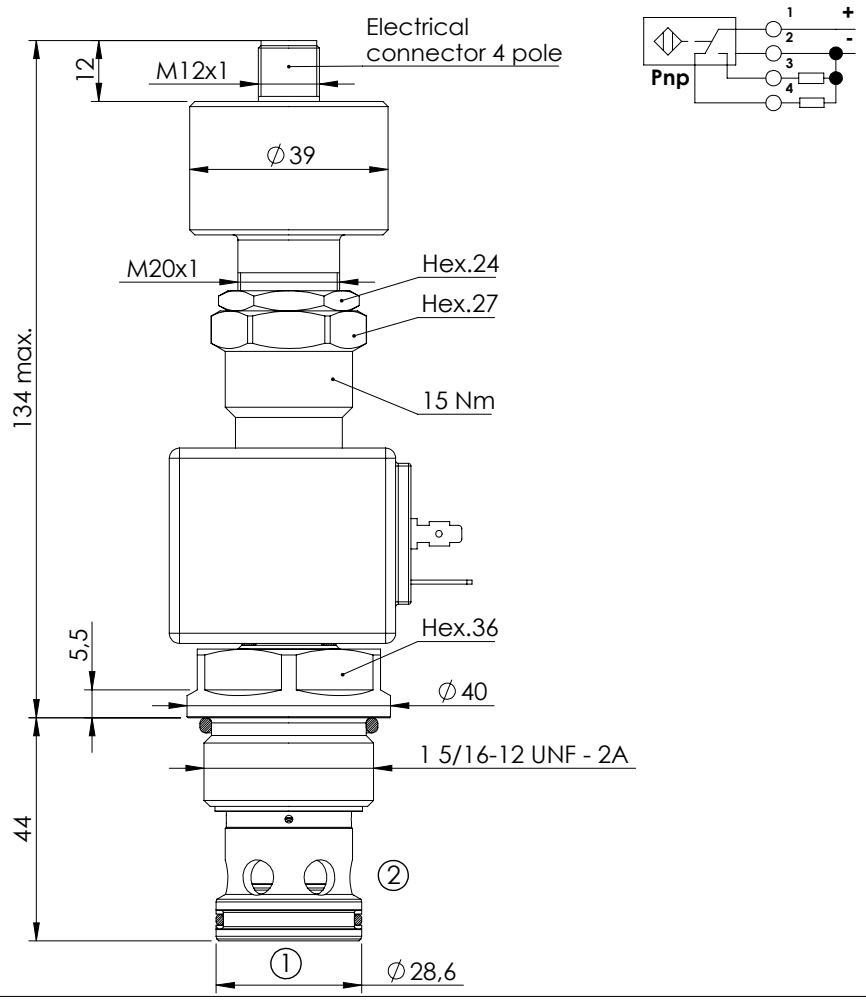

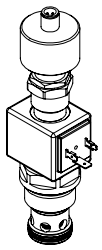

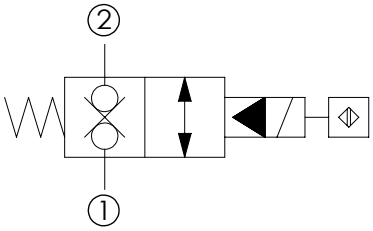

SPECIFICATIONS

Max. operating pressure:	350 bar
Rated flow:	300 l/min
Cavity:	SAE-16-2N
Weight:	0,7 kg
Coil type:	M7 type
Operating temperature:	-25/+80°C

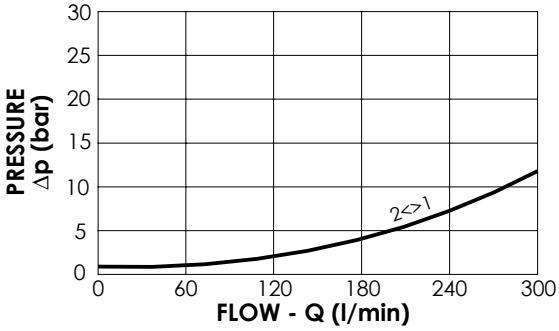

NOTES

Installation torque:	118 - 132 Nm
Seal kit:	RB100084

ORDERING CODES

Quick code	Description	Connector	Voltage	Options
CE001046	CEBN-300-NCDR-120-S16-V350-12HR	DIN 43650	12V DC	Proximity sensor
CE001068	CEBN-300-NCDR-120-S16-V350-24HR	DIN 43650	24V DC	Proximity sensor

SOLENOID OPERATED CARTRIDGE

CEBN-040-NADR

POPPET TYPE PROXIMITY SENSOR

ATLANTIC Fluid Tech

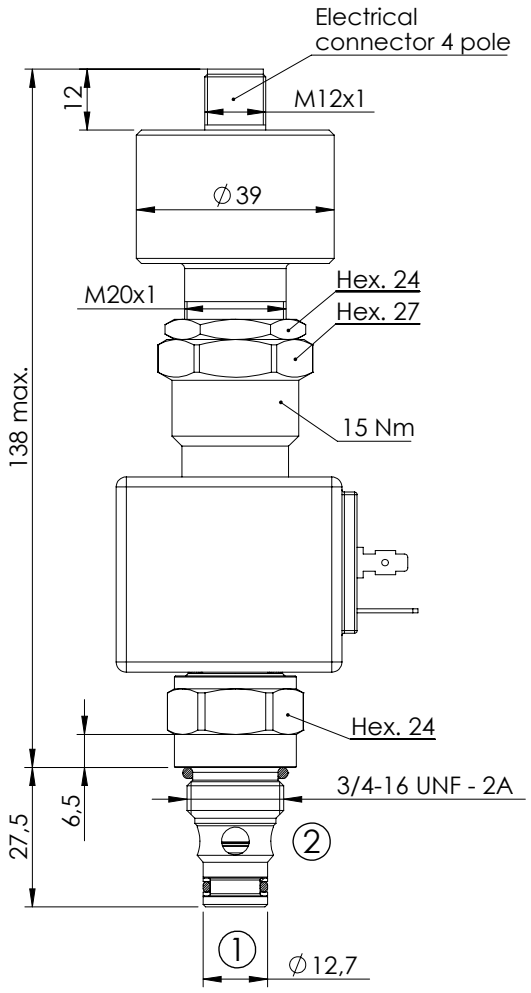

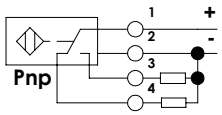

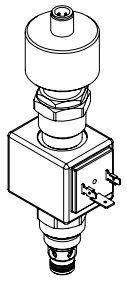

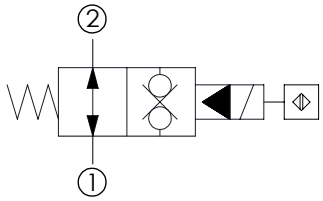

SPECIFICATIONS

Max. operating pressure:	350 bar
Rated flow:	40 l/min
Cavity:	SAE-08-2N
Weight:	0,5 kg
Coil type:	M7 type
Operating temperature:	-25/+80°C

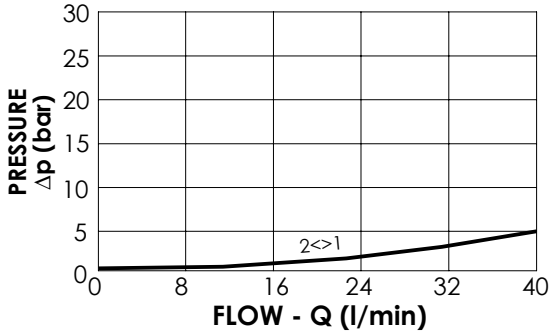

NOTES

Installation torque:	45 - 50 Nm
Seal kit:	RB100081

ORDERING CODES

Quick code	Description	Connector	Voltage	Options
CE001047	CEBN-040-NADR-121-S08-V350-12HR	DIN 43650	12V DC	Proximity sensor
CE001069	CEBN-040-NADR-121-S08-V350-24HR	DIN 43650	24V DC	Proximity sensor

SOLENOID OPERATED CARTRIDGE

CEBN-070-NADR

POPPET TYPE PROXIMITY SENSOR

ATLANTIC Fluid Tech

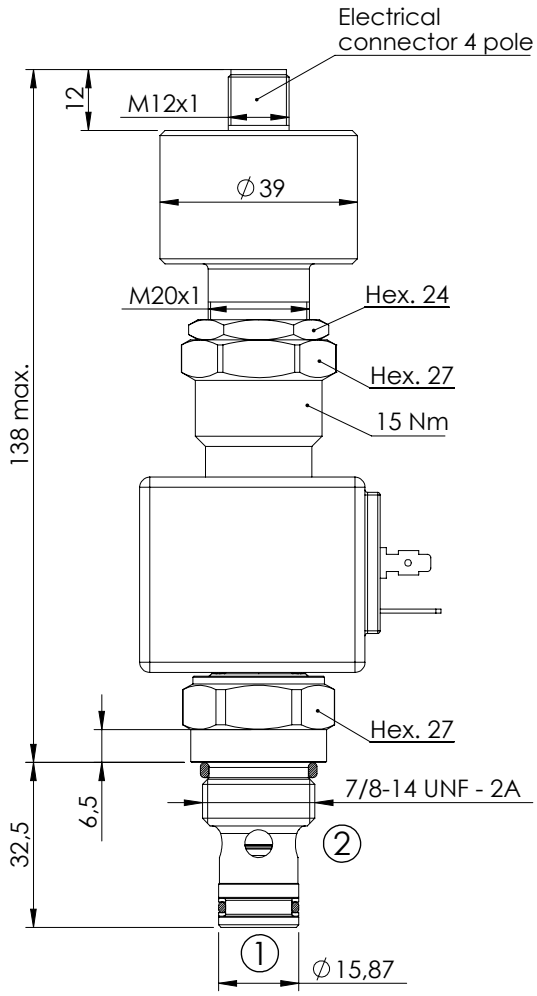

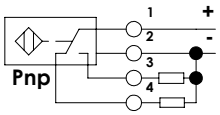

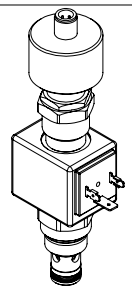

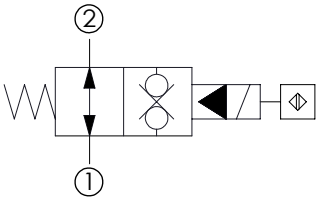

SPECIFICATIONS

Max. operating pressure:	350 bar
Rated flow:	70 l/min
Cavity:	SAE-10-2N
Weight:	0,53 kg
Coil type:	M7 type
Operating temperature:	-25/+80°C

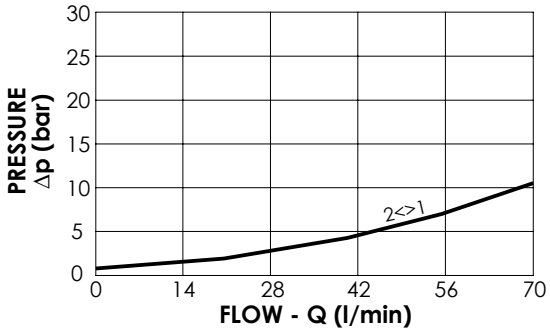

NOTES

Installation torque:	55 - 62 Nm
Seal kit:	RB100082

ORDERING CODES

Quick code	Description	Connector	Voltage	Options
CE001048	CEBN-070-NADR-121-S10-V350-12HR	DIN 43650	12V DC	Proximity sensor
CE001070	CEBN-070-NADR-121-S10-V350-24HR	DIN 43650	24V DC	Proximity sensor

SOLENOID OPERATED CARTRIDGE

CEBN-100-NAFN

POPPET TYPE PROXIMITY SENSOR

ATLANTIC Fluid Tech

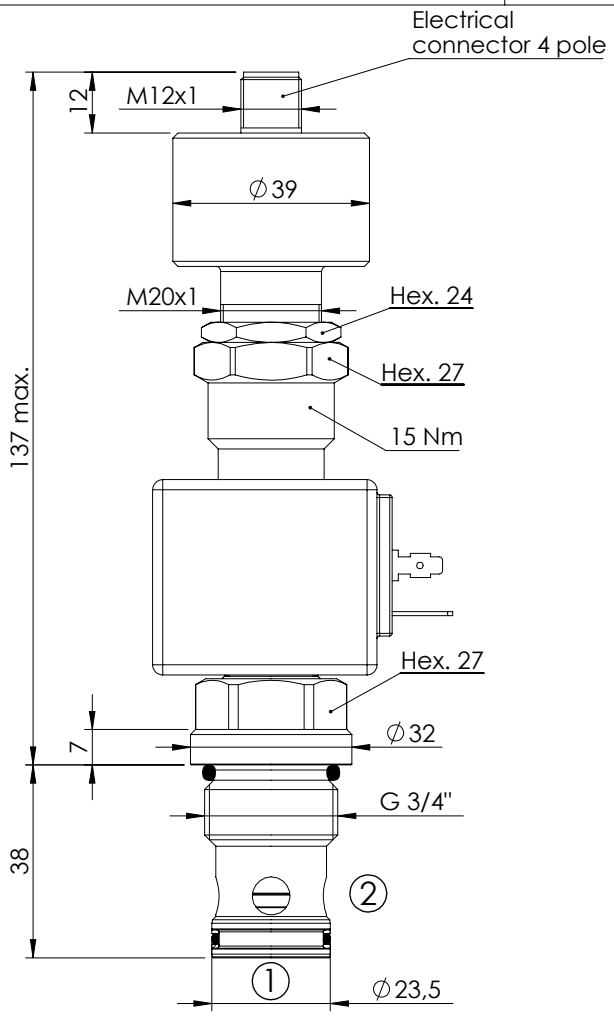

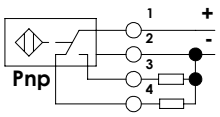

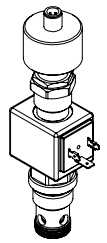

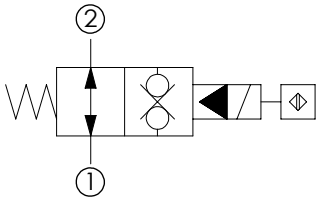

SPECIFICATIONS

Max. operating pressure:	350 bar
Rated flow:	100 l/min
Cavity:	VP000057
Weight:	0,6 kg
Coil type:	M7 type
Operating temperature:	-25/+80°C

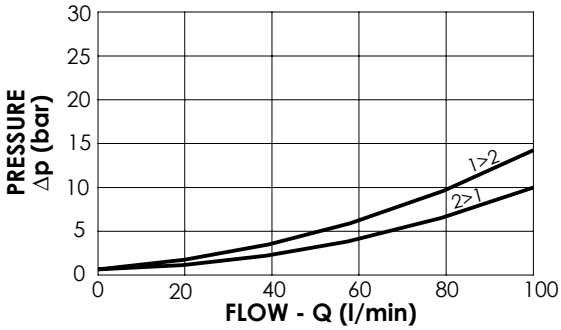

NOTES

Installation torque:	110 - 130 Nm
Seal kit:	RD100057

ORDERING CODES

Quick code	Description	Connector	Voltage	Options
CE001106	CEBN-100-NAFN-121-057-V350-12HR	DIN 43650	12V DC	Proximity sensor
CE001107	CEBN-100-NAFN-121-057-V350-24HR	DIN 43650	24V DC	Proximity sensor

SOLENOID OPERATED CARTRIDGE

CEBN-180-NAFN

POPPET TYPE PROXIMITY SENSOR

ATLANTIC Fluid Tech

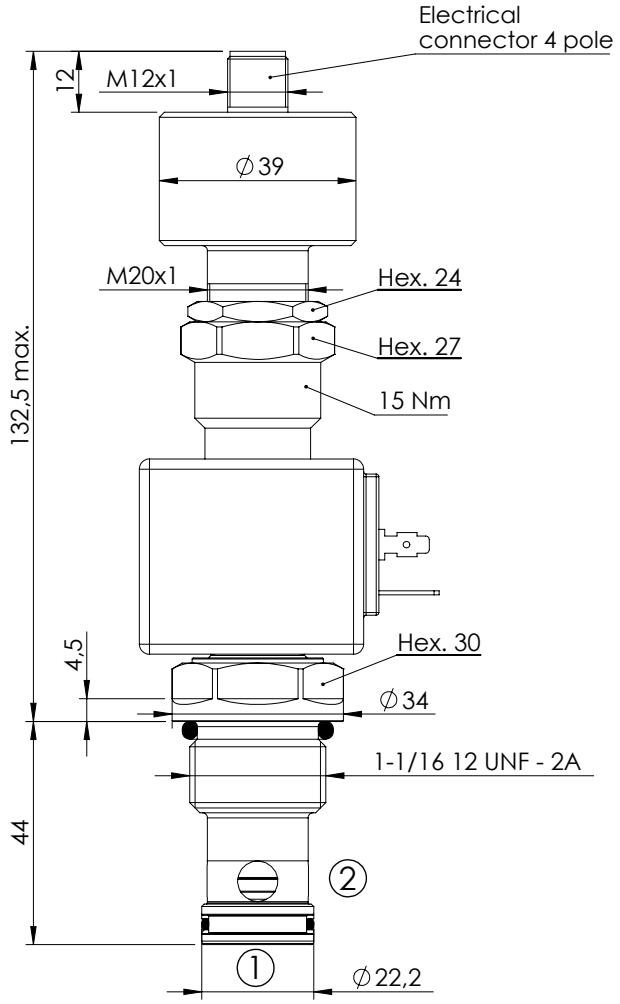

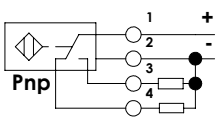

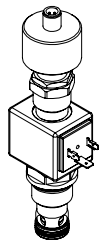

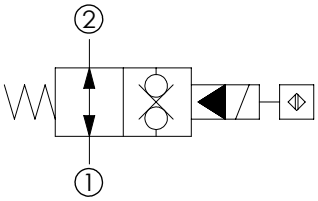

SPECIFICATIONS

Max. operating pressure:	350 bar
Rated flow:	180 l/min
Cavity:	SAE-12-2N
Weight:	0,6 kg
Coil type:	M7 type
Operating temperature:	-25/+80°C

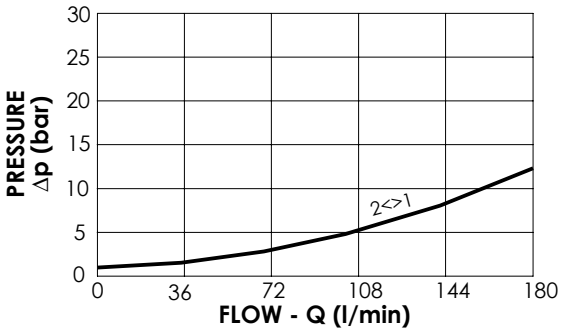

NOTES

Installation torque:	135 - 150 Nm
Seal kit:	RB100083

ORDERING CODES

Quick code	Description	Connector	Voltage	Options
CE001108	CEBN-180-NAFN-121-S12-V350-12HR	DIN 43650	12V DC	Proximity sensor
CE001109	CEBN-180-NAFN-121-S12-V350-24HR	DIN 43650	24V DC	Proximity sensor

SOLENOID OPERATED CARTRIDGE

CEBN-200-NAFN

POPPET TYPE PROXIMITY SENSOR

ATLANTIC Fluid Tech

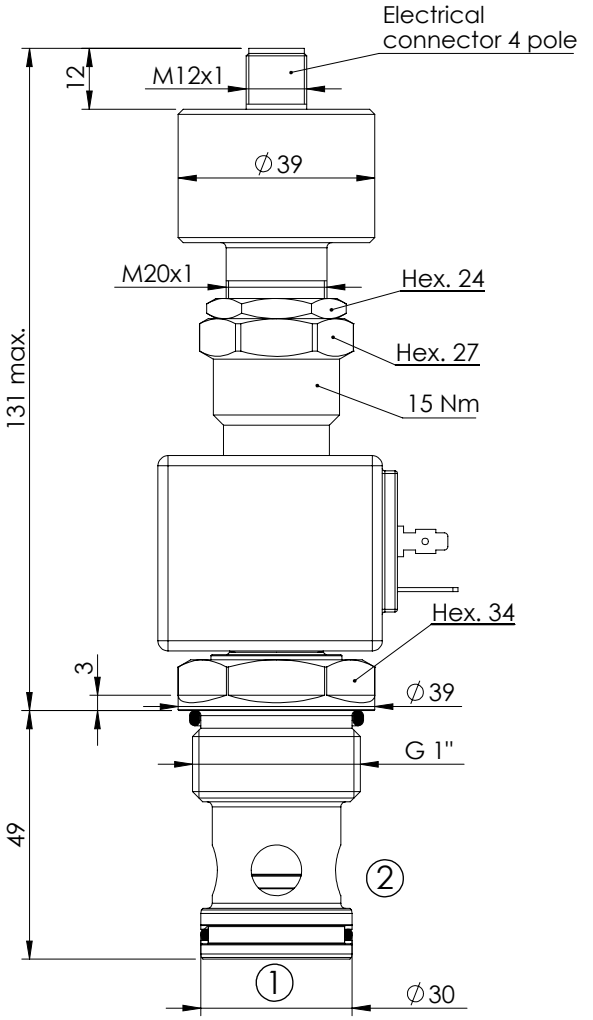

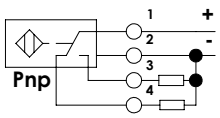

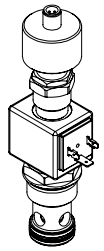

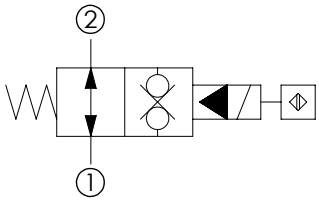

SPECIFICATIONS

Max. operating pressure:	350 bar
Rated flow:	200 l/min
Cavity:	VP000013
Weight:	0,71 kg
Coil type:	M7 type
Operating temperature:	-25/+80°C

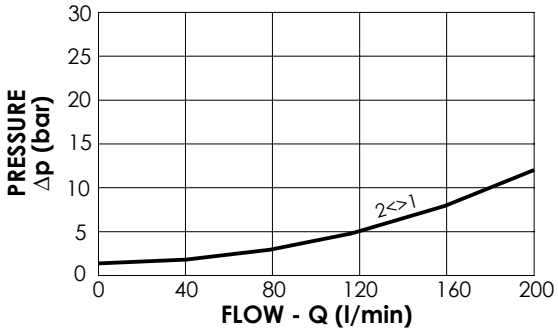

NOTES

Installation torque:	135 - 150 Nm
Seal kit:	RD100013

ORDERING CODES

Quick code	Description	Connector	Voltage	Options
CE001110	CEBN-200-NAFN-121-013-V350-12HR	DIN 43650	12V DC	Proximity sensor
CE001111	CEBN-200-NAFN-121-013-V350-24HR	DIN 43650	24V DC	Proximity sensor

SOLENOID OPERATED CARTRIDGE

CEBN-300-NADR

POPPET TYPE PROXIMITY SENSOR

ATLANTIC Fluid Tech

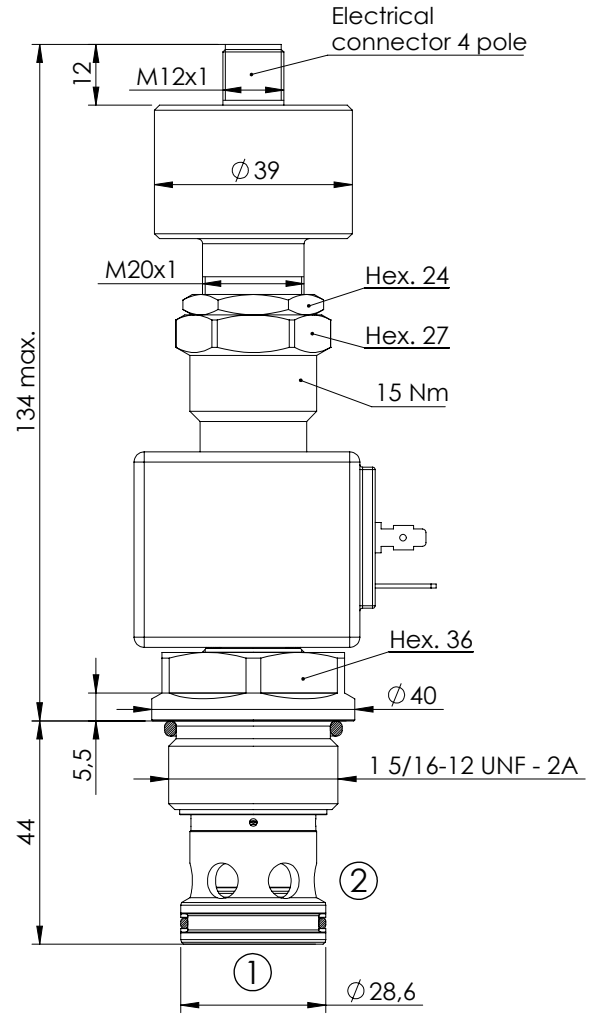

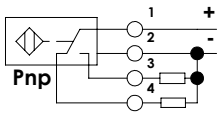

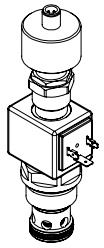

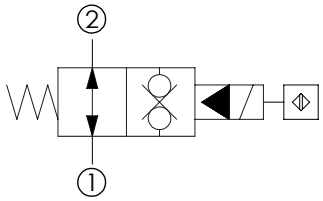

SPECIFICATIONS

Max. operating pressure:	350 bar
Rated flow:	300 l/min
Cavity:	SAE-16-2N
Weight:	0,72 kg
Coil type:	M7 type
Operating temperature:	-25/+80°C

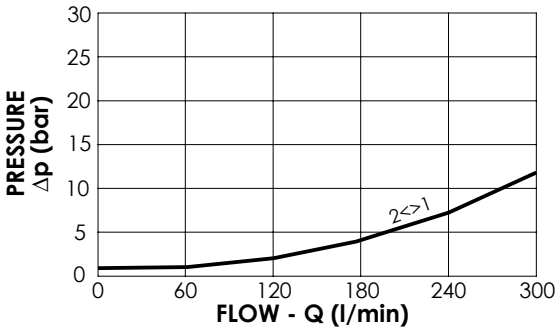

NOTES

Installation torque:	118 - 132 Nm
Seal kit:	RB100084

ORDERING CODES

Quick code	Description	Connector	Voltage	Options
CE001049	CEBN-300-NADR-121-S16-V350-12HR	DIN 43650	12V DC	Proximity sensor
CE001071	CEBN-300-NADR-121-S16-V350-24HR	DIN 43650	24V DC	Proximity sensor

SOLENOID OPERATED CARTRIDGE

CEBD-040-NAMV

DIRECT OPERATED POPPET TYPE POSITION SENSOR

ATLANTIC Fluid Tech

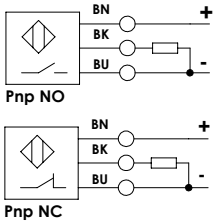

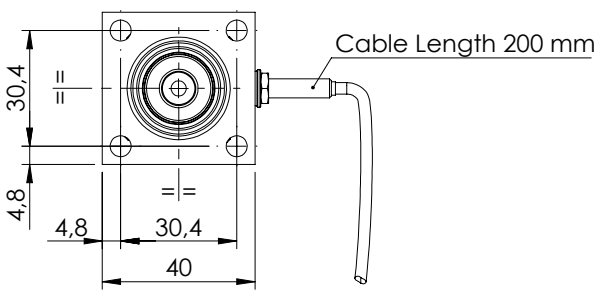

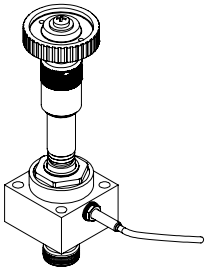

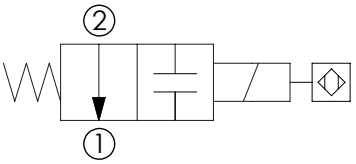

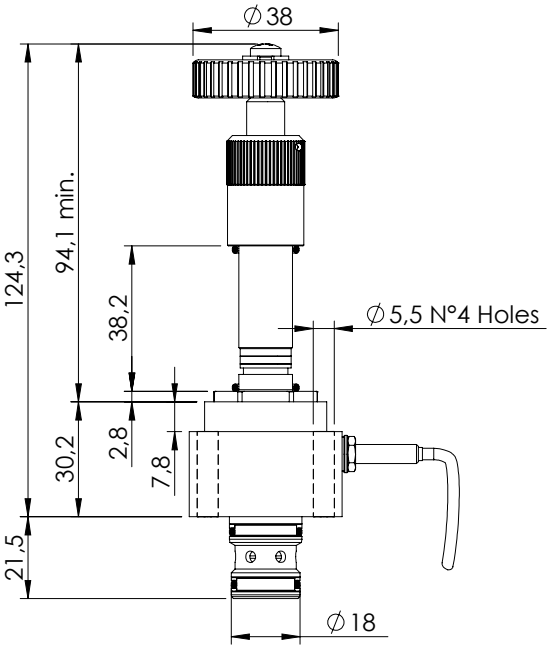

SPECIFICATIONS

Max. operating pressure:	350 bar
Rated flow:	40 l/min
Cavity:	VP000338
Weight:	0,4 kg
Coil type:	M14 type
Min. voltage required:	90% of nominal
Max. int. leakage:	200 cc/min (@46 cSt)
Installation torque:	5 Nm
Seal kit:	RD700338

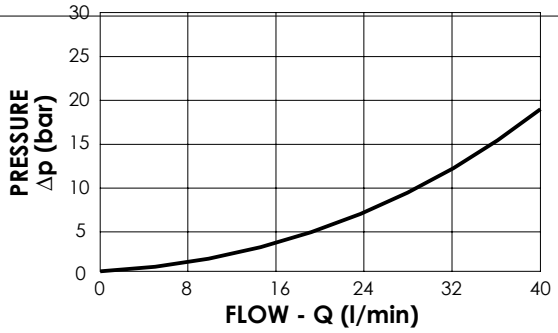

NOTES

To be mounted with M5x30 screws

Maximum pressure in ②: 100 bar

ORDERING CODES

Quick code	Description	Sensor type	
CE000818	CEBD-040-NAMV-97-338-N350	Valve not energized Sensor open (PNP-NO)	
CE000819	CEBD-040-NACV-97-338-N350	Valve not energized Sensor closed (PNP-NC)	

SOLENOID OPERATED CARTRIDGE

CEBT-300-NCFN

PILOTED RELIEF SPOOL TYPE

ATLANTIC Fluid Tech

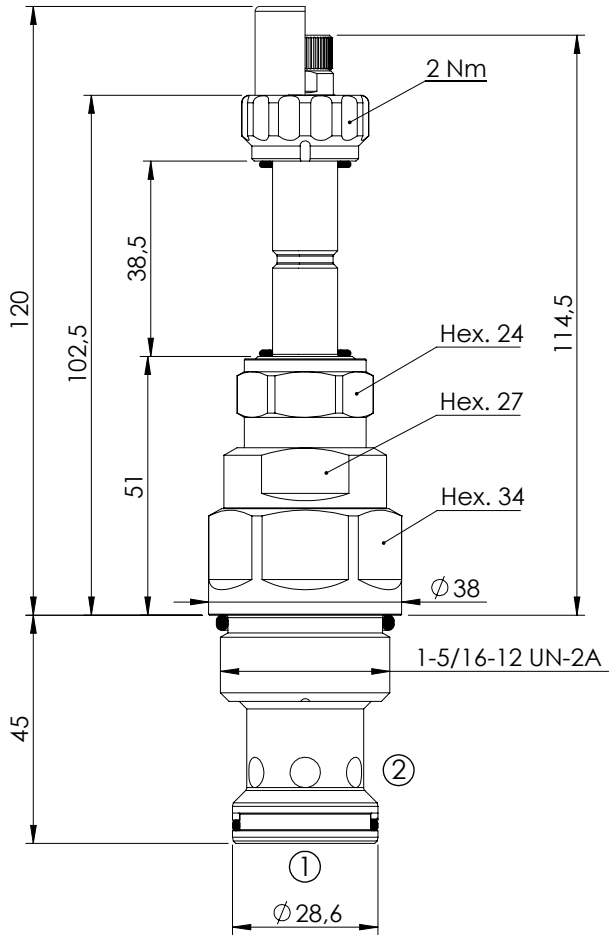

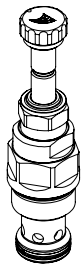

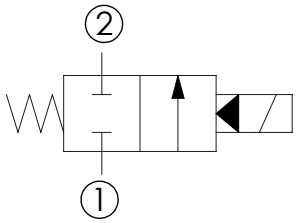

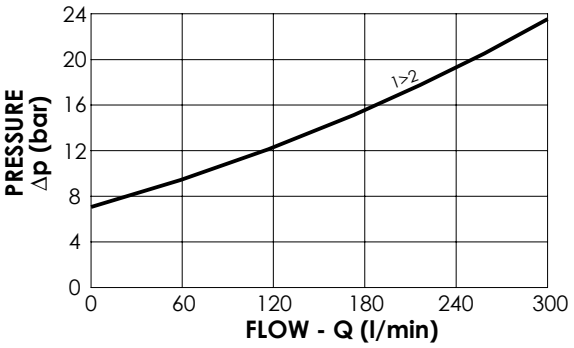

SPECIFICATIONS

Max. operating pressure:	350 bar
Rated flow:	300 l/min
Cavity:	SAE-16-2N
Weight:	0,5 kg
Coil type:	M7 type
Max. int. leakage:	350 cm^3/min (@46 cSt)
Seal kit:	RA900084

NOTES

Installation torque:	118 - 132 Nm

OPTIONS

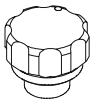

Standard

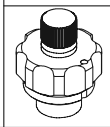

Knob style override

SEALING CAP

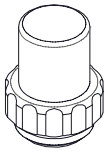

Ordering code: AT000113

ORDERING CODES

Quick code	Description	Options	
CE000913	CEBT-300-NCFN-98-S16-N350	Standard	
CE000914	CEBT-300-NCFE-98-S16-N350	Knob style override	

SOLENOID OPERATED CARTRIDGE

CEBT-500-NCFN

PILOTED OPERATED SPOOL TYPE

ATLANTIC Fluid Tech

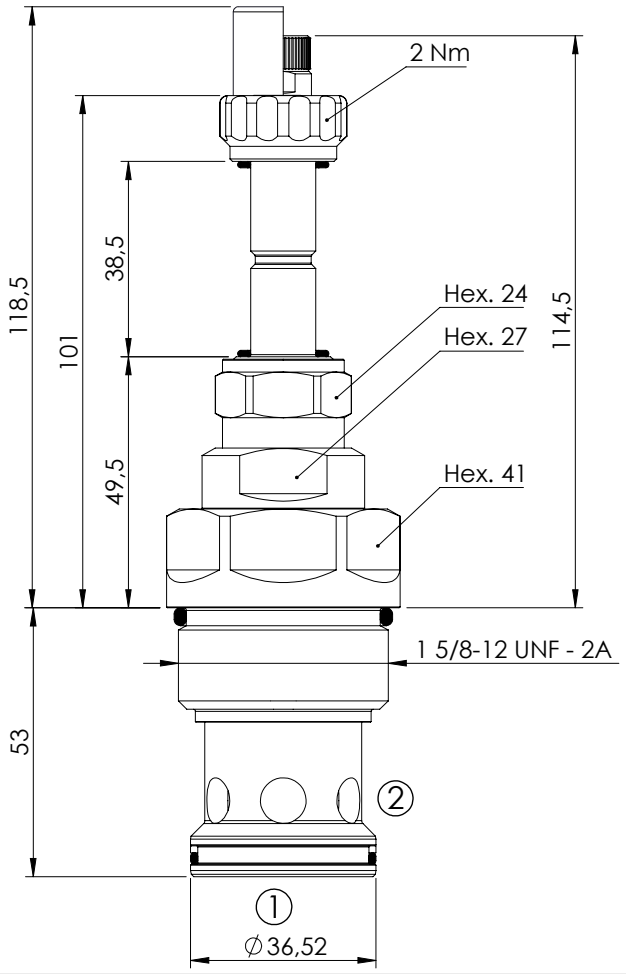

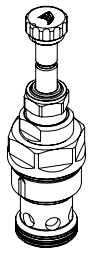

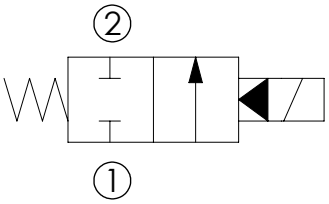

SPECIFICATIONS

Max. operating pressure:	350 bar
Rated flow:	500 l/min
Cavity:	SAE-20-2N
Weight:	0,7 kg
Coil type:	M7 type
Max. int. leakage:	400 cm^3/min (@46 cSt)
Seal kit:	RA900085

NOTES

Installation torque:	230 - 250 Nm

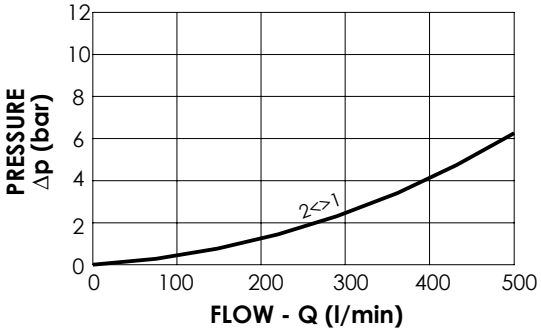

OPTIONS

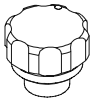

Standard

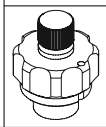

Knob style override

SEALING CAP

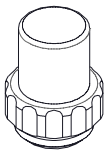

Ordering code: AT000113

ORDERING CODES

Quick code	Description	Options	
CE000763	CEBT-500-NCFN-98-S20-N350	Standard	
CE000764	CEBT-500-NCFK-98-S20-N350	Knob style override	

SOLENOID OPERATED CARTRIDGE

CEBT-300-NAFN

PILOTED RELIEF SPOOL TYPE

ATLANTIC Fluid Tech

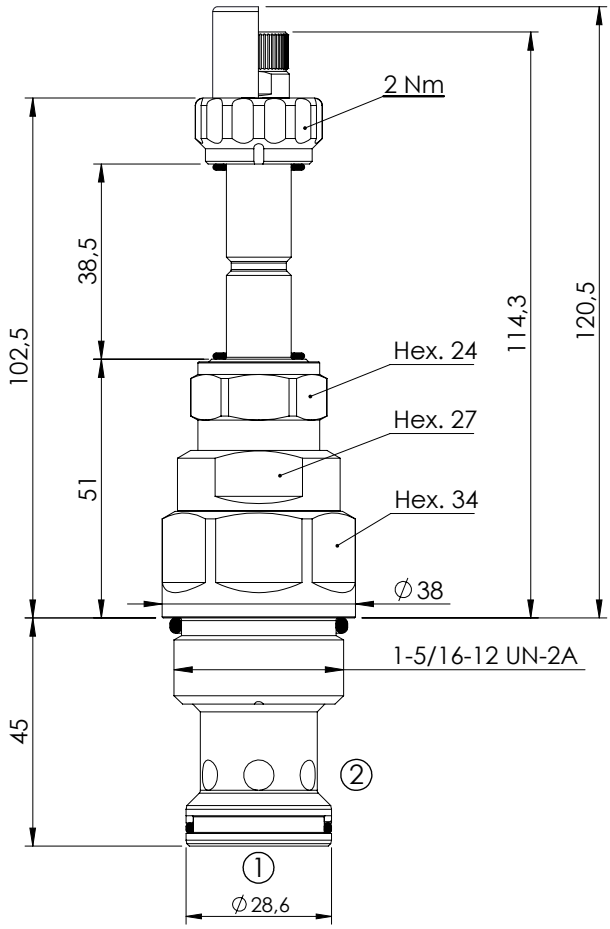

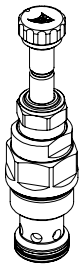

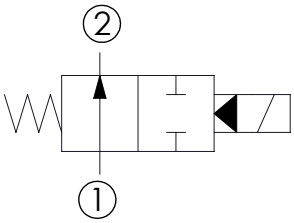

SPECIFICATIONS

Max. operating pressure:	350 bar
Rated flow:	300 l/min
Cavity:	SAE-16-2N
Weight:	0,5 kg
Coil type:	M7 type
Max. int. leakage:	350 cm^3/min (@46 cSt)
Seal kit:	RA900084

NOTES

Installation torque:	118 - 132 Nm

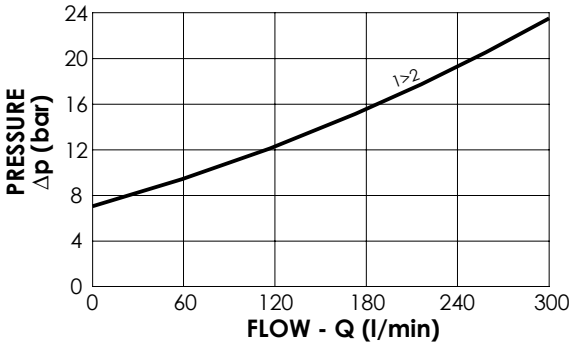

OPTIONS

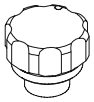

Standard

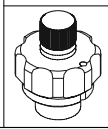

Knob style override

SEALING CAP

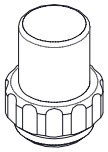

Ordering code: AT000113

ORDERING CODES

Quick code	Description	Options	
CE000861	CEBT-300-NAFN-99-S16-N350	Standard	
CE000888	CEBT-300-NAFE-99-S16-N350	Knob style override	

SOLENOID OPERATED CARTRIDGE

CEBT-500-NAFN

PILOTED OPERATED SPOOL TYPE

ATLANTIC Fluid Tech

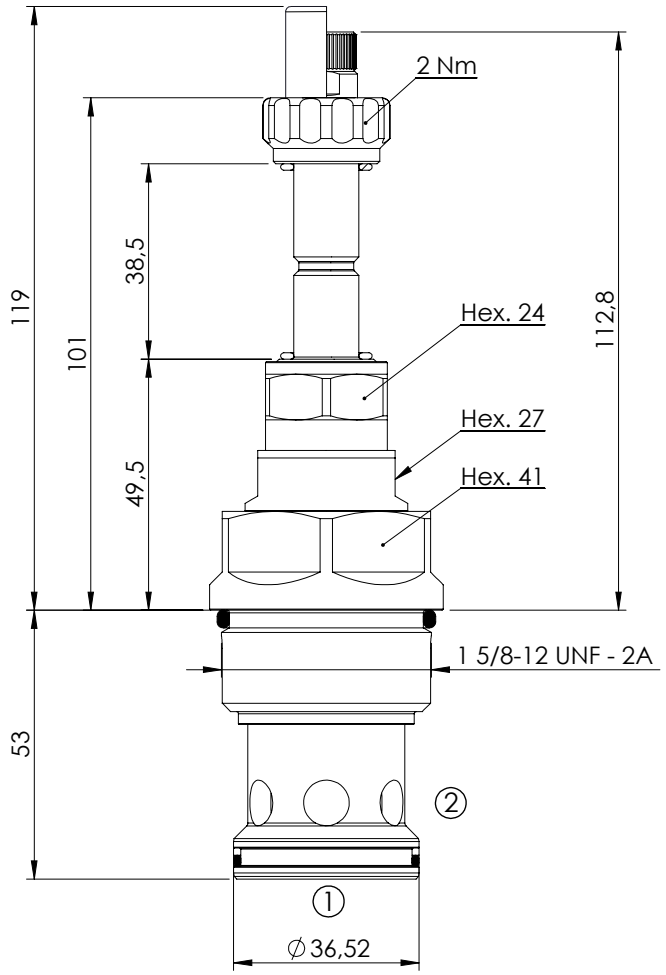

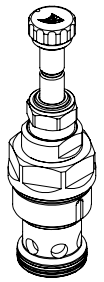

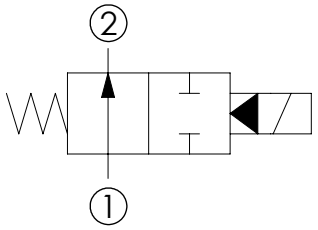

SPECIFICATIONS

Max. operating pressure:	350 bar
Rated flow:	500 l/min
Cavity:	SAE-20-2N
Weight:	0,7 kg
Coil type:	M7 type
Max. int. leakage:	400 cm^3/min (@46 cSt)
Seal kit:	RA900085

NOTES

Installation torque:	230 - 250 Nm

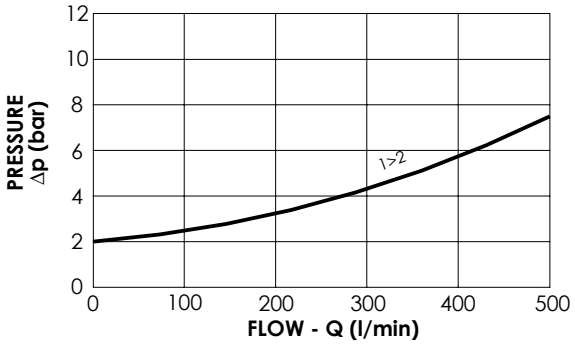

OPTIONS

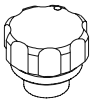

Standard

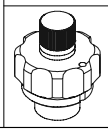

Knob style override

SEALING CAP

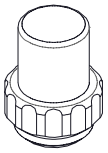

Ordering code: AT000113

ORDERING CODES

Quick code	Description	Options	
CE000765	CEBT-500-NAFN-99-S20-N350	Standard	
CE000766	CEBT-500-NAFK-99-S20-N350	Knob style override	

SOLENOID OPERATED CARTRIDGE

CEBN-040-NCAN

PNEUMATIC OPERATED POPPET TYPE

ATLANTIC Fluid Tech

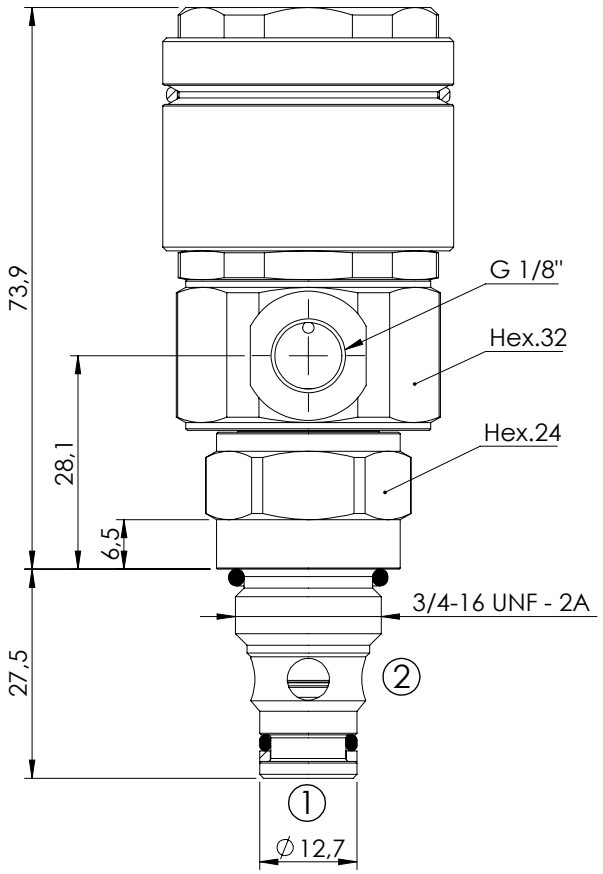

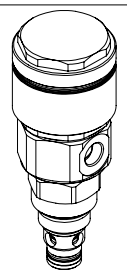

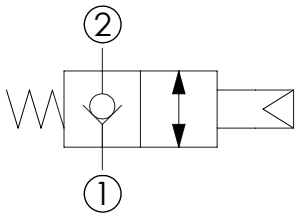

SPECIFICATIONS

Max. operating pressure:	**350 bar**
Rated flow:	**40 l/min**
Cavity:	**SAE-08-2N**
Weight:	**0,31 kg**
Seal kit:	**RA900081**

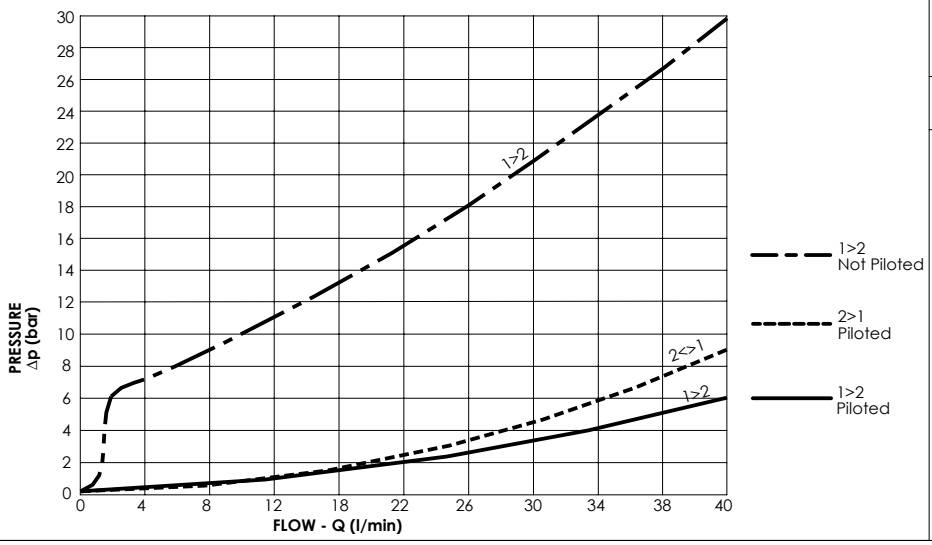

NOTES

Installation torque:	**45 - 50 Nm**

ORDERING CODES

Quick code	Description	Pneumatic pilot pressure (bar)		
CE000961	**CEBN-040-NCAN-123-S08-N350**	**Min. 4**	**Max. 10**	

SOLENOID OPERATED CARTRIDGE

CEBN-200-NCAN

PNEUMATIC OPERATED POPPET TYPE

ATLANTIC Fluid Tech

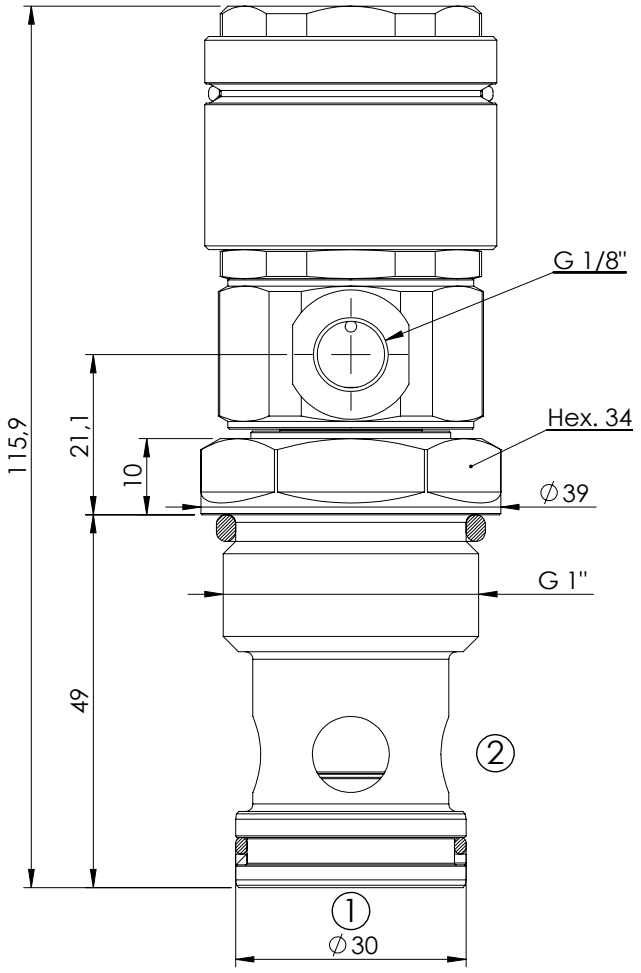

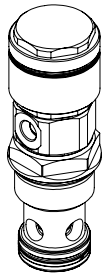

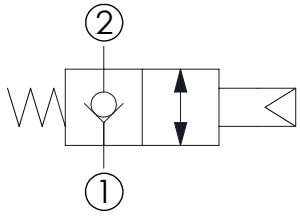

SPECIFICATIONS

Max. operating pressure:	350 bar
Rated flow:	200 l/min
Cavity:	VP000013
Weight:	0,52 kg
Seal kit:	RA900013

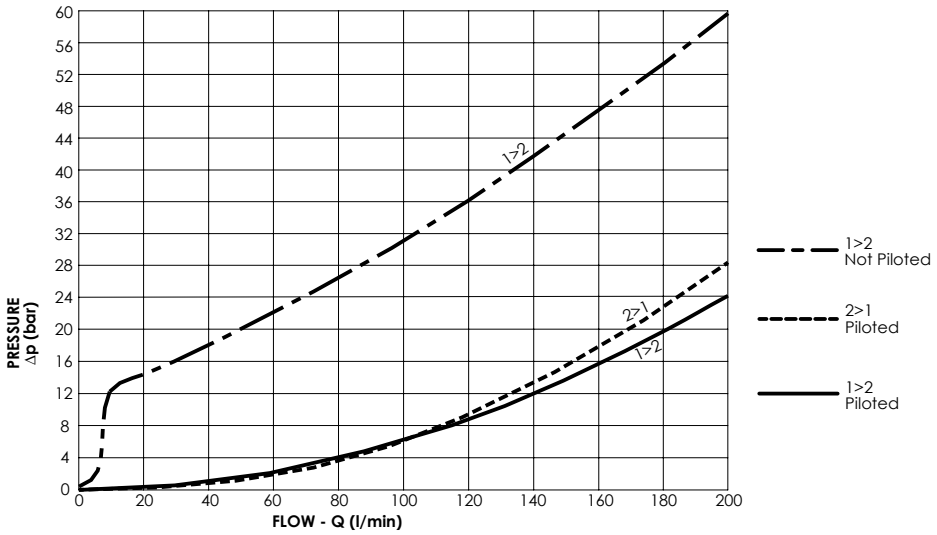

NOTES

Installation torque:	135 - 150 Nm

ORDERING CODES

Quick code	Description	Pneumatic pilot pressure (bar)		
CE000883	CEBN-200-NCAN-123-013-N350	Min. 4	Max. 10	

SOLENOID OPERATED CARTRIDGE

CECS-010-SEFN

DIRECT OPERATED SPOOL TYPE

ATLANTIC Fluid Tech

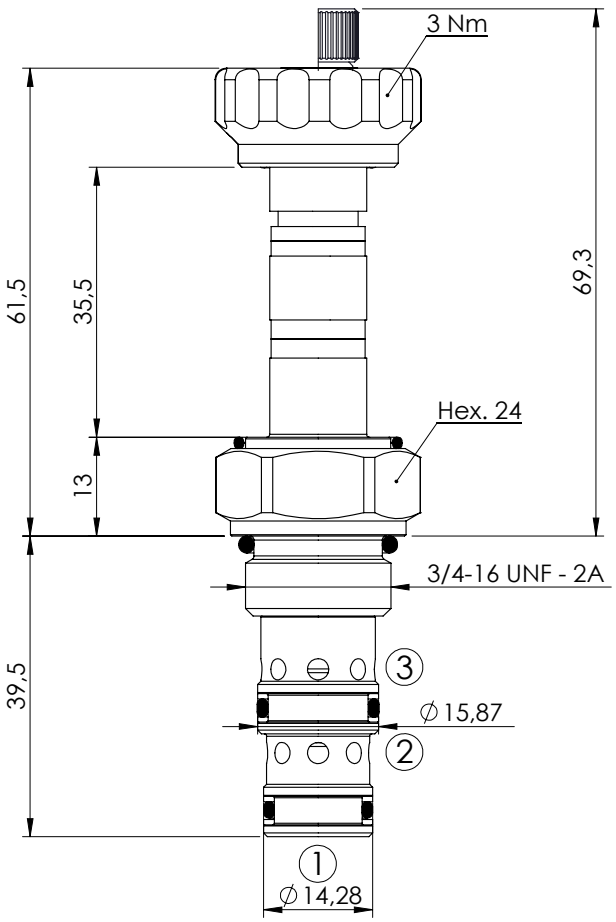

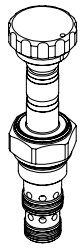

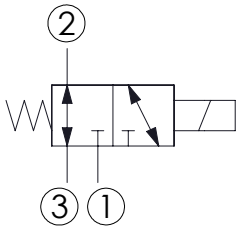

SPECIFICATIONS

Max. operating pressure:	210 bar
Rated flow:	10 l/min
Cavity:	SAE-08-3N
Weight:	0,14 kg
Min. voltage required:	90% of nominal
Coil type:	M7 type
Leakage:	120cm^3/min
Seal kit:	RB700091

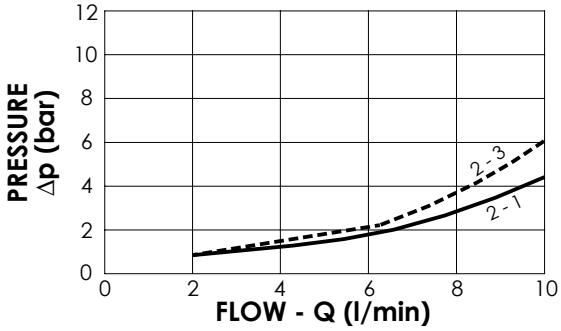

NOTES

Installation torque:	45 - 50 Nm

OPTIONS

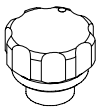

Standard

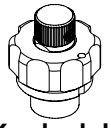

Knob style override

ORDERING CODES

Quick code	Description	Options	
CE000009	CECS-010-SEFN-61-S08-N210	Standard	
CE000066	CECS-010-SEFE-61-S08-N210	Knob style override	

SOLENOID OPERATED CARTRIDGE

CECS-010-SEFN

DIRECT OPERATED SPOOL TYPE

ATLANTIC Fluid Tech

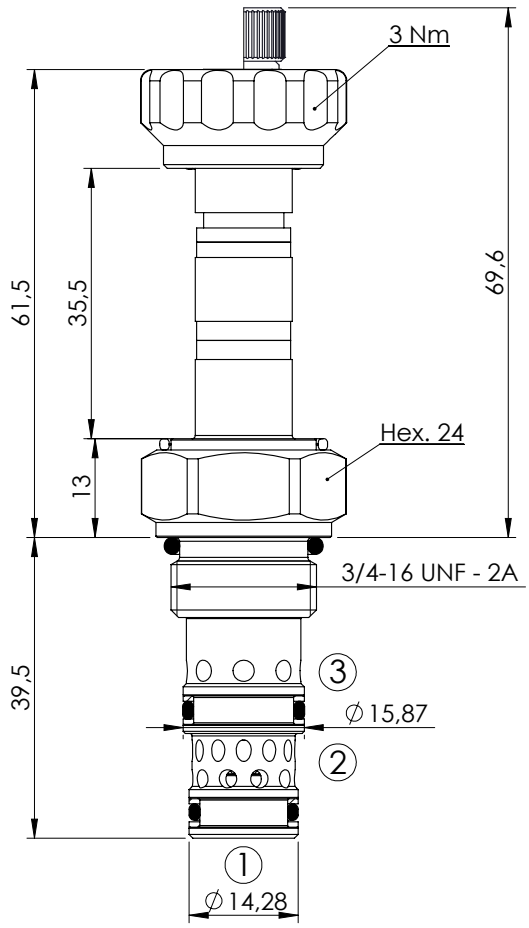

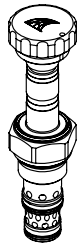

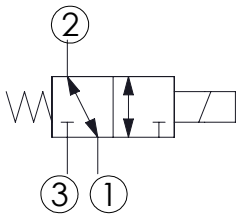

SPECIFICATIONS

Max. operating pressure:	210 bar
Rated flow:	10 l/min
Cavity:	SAE-08-3N
Weight:	0,14 kg
Min. voltage required:	90% of nominal
Coil type:	M7 type
Leakage:	120cm^3/min
Seal kit:	RB700091

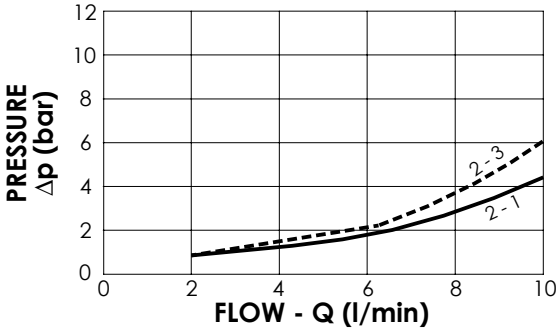

NOTES

Installation torque:	45 - 50 Nm

OPTIONS

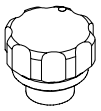

Standard

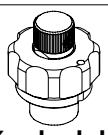

Knob style override

ORDERING CODES

Quick code	Description	Options	
CE000010	CECS-010-SEFN-62-S08-N210	Standard	
CE000067	CECS-010-SEFE-62-S08-N210	Knob style override	

SOLENOID OPERATED CARTRIDGE

CECS-010-SEFN

DIRECT OPERATED SPOOL TYPE

ATLANTIC Fluid Tech

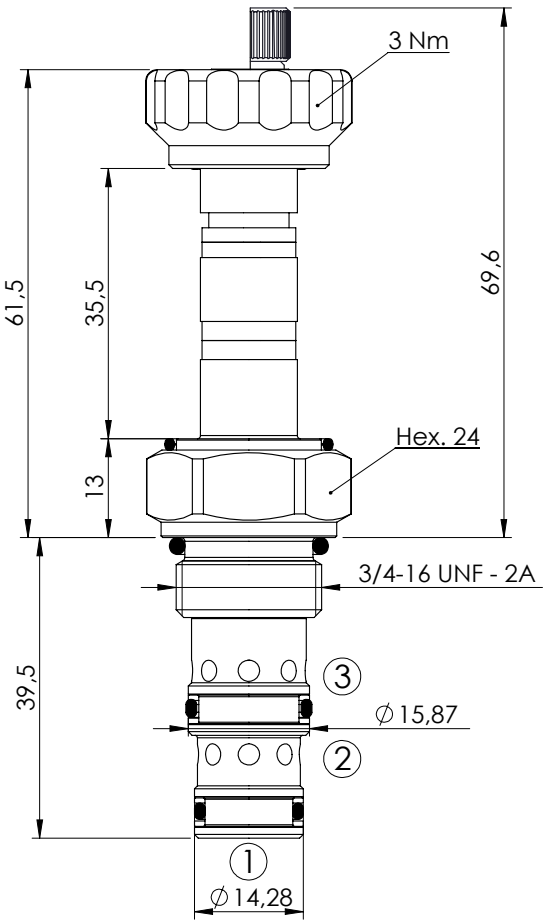

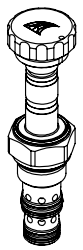

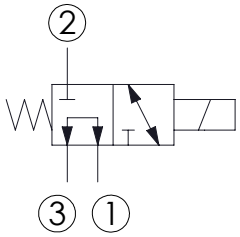

SPECIFICATIONS

Max. operating pressure:	210 bar
Rated flow:	10 l/min
Cavity:	SAE-08-3N
Weight:	0,14 kg
Min. voltage required:	90% of nominal
Coil type:	M7 type
Leakage:	120cm^3/min
Seal kit:	RB700091

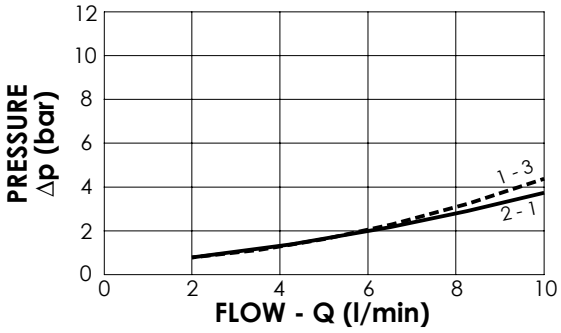

NOTES

Installation torque:	45 - 50 Nm

OPTIONS

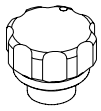

Standard

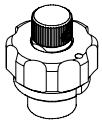

Knob style override

ORDERING CODES

Quick code	Description	Options	
CE000011	CECS-010-SEFN-63-S08-N210	Standard	
CE000068	CECS-010-SEFE-63-S08-N210	Knob style override	

SOLENOID OPERATED CARTRIDGE

CECS-010-SEFN

DIRECT OPERATED SPOOL TYPE

ATLANTIC Fluid Tech

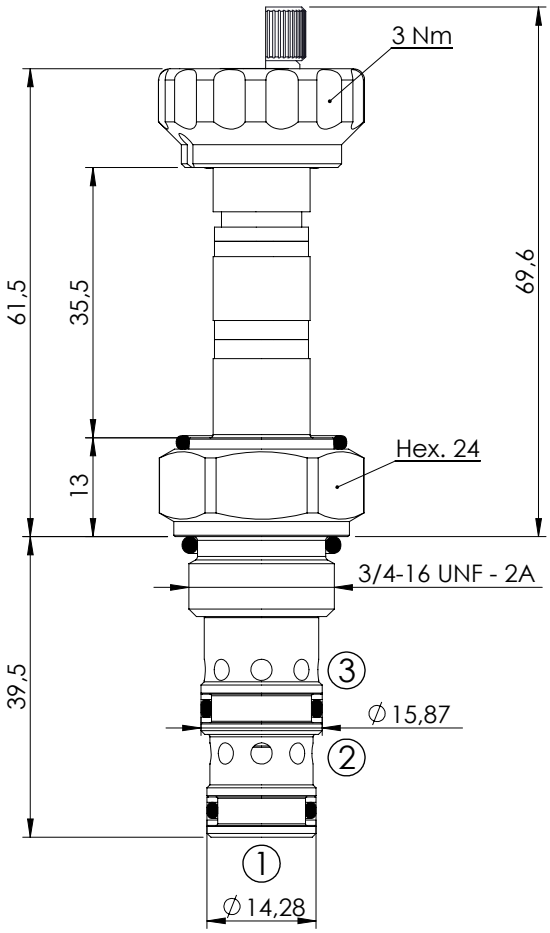

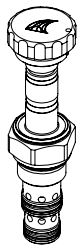

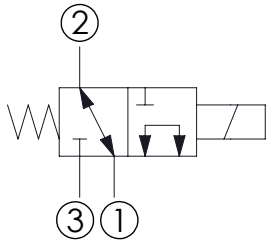

SPECIFICATIONS

Max. operating pressure:	210 bar
Rated flow:	10 l/min
Cavity:	SAE-08-3N
Weight:	0,14 kg
Min. voltage required:	90% of nominal
Coil type:	M7 type
Leakage:	120cm^3/min
Seal kit:	RB700091

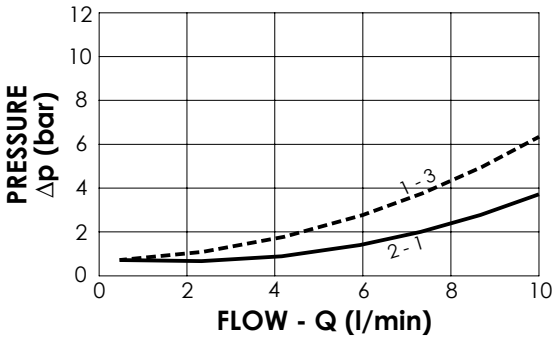

NOTES

Installation torque:	45 - 50 Nm

OPTIONS

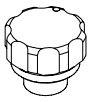

Standard

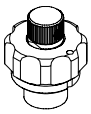

Knob style override

ORDERING CODES

Quick code	Description	Options	
CE000008	CECS-010-SEFN-64-S08-N210	Standard	
CE000070	CECS-010-SEFE-64-S08-N210	Knob style override	

SOLENOID OPERATED CARTRIDGE

CEDS-010-SEFN

DIRECT OPERATED SPOOL TYPE

ATLANTIC Fluid Tech

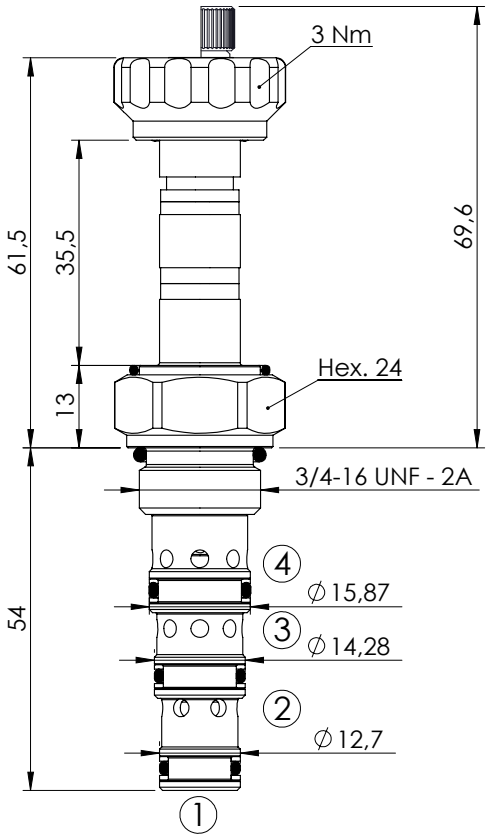

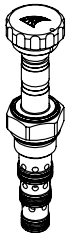

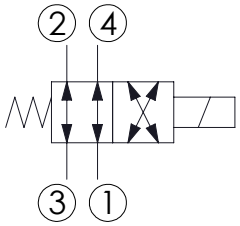

SPECIFICATIONS

Max. operating pressure:	210 bar
Rated flow:	10 l/min
Cavity:	SAE-08-4N
Weight:	0,14 kg
Min. voltage required:	90% of nominal
Coil type:	M7 type
Leakage:	120cm^3/min
Seal kit:	RB700101

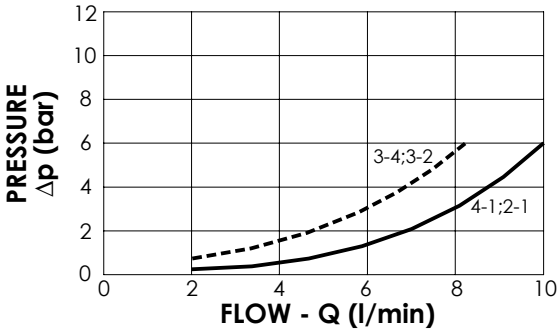

NOTES

Installation torque:	45 - 50 Nm

OPTIONS

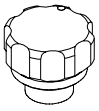

Standard

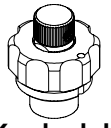

Knob style override

ORDERING CODES

Quick code	Description	Options	
CE000014	CEDS-010-SEFN-40-S08-N210	Standard	
CE000071	CEDS-010-SEFE-40-S08-N210	Knob style override	

SOLENOID OPERATED CARTRIDGE

CEDS-010-SEFN

DIRECT OPERATED SPOOL TYPE

ATLANTIC Fluid Tech

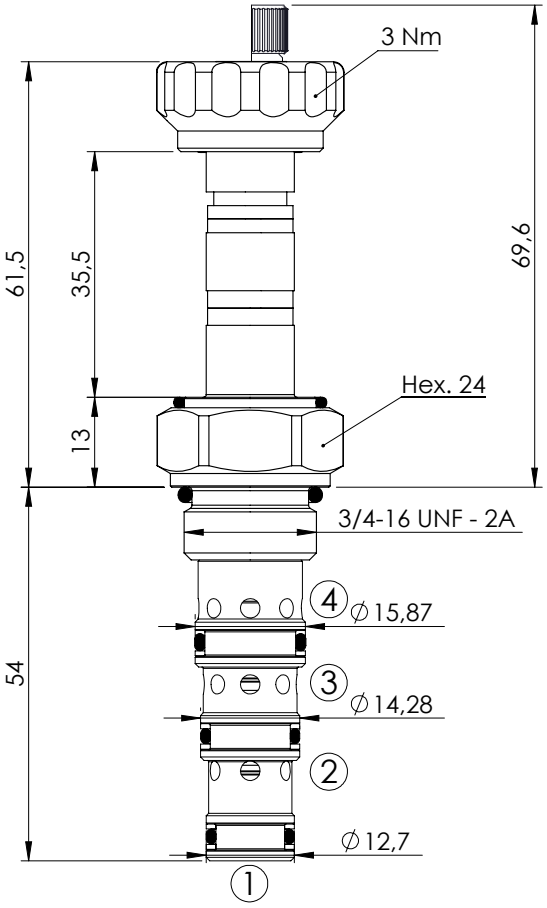

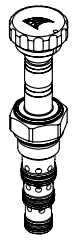

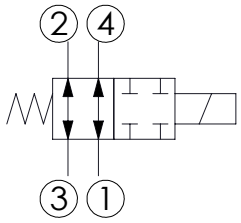

SPECIFICATIONS

Max. operating pressure:	210 bar
Rated flow:	10 l/min
Cavity:	SAE-08-4N
Weight:	0,14 kg
Min. voltage required:	90% of nominal
Coil type:	M7 type
Leakage:	120cm^3/min
Seal kit:	RB700101

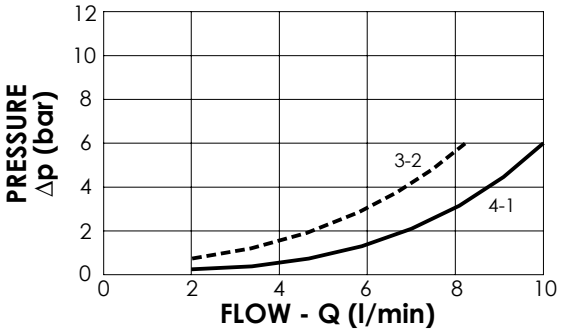

NOTES

Installation torque:	45 - 50 Nm

OPTIONS

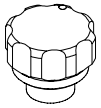

Standard

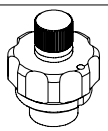

Knob style override

ORDERING CODES

Quick code	Description	Options	
CE000867	CEDS-010-SEFN-49-S08-N210	Standard	
CE000787	CEDS-010-SEFE-49-S08-N210	Knob style override	

SOLENOID OPERATED CARTRIDGE

CEDS-010-SEFN

DIRECT OPERATED SPOOL TYPE

ATLANTIC Fluid Tech

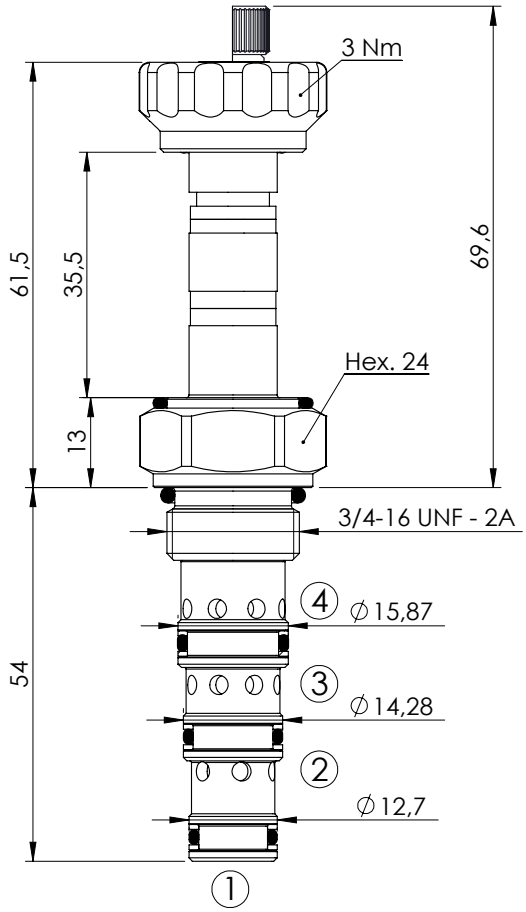

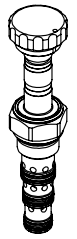

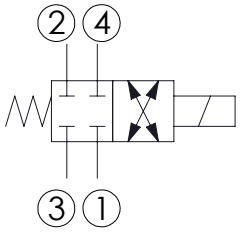

SPECIFICATIONS

Max. operating pressure:	210 bar
Rated flow:	10 l/min
Cavity:	SAE-08-4N
Weight:	0,14 kg
Min. voltage required:	90% of nominal
Coil type:	M7 type
Leakage:	120cm^3/min
Seal kit:	RB700101

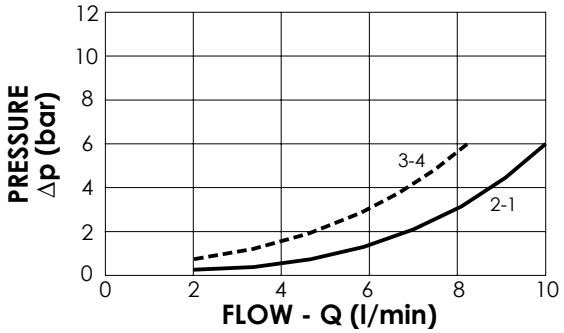

NOTES

Installation torque:	45 - 50 Nm

OPTIONS

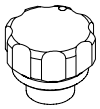

Standard

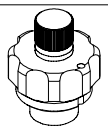

Knob style override

ORDERING CODES

Quick code	Description	Options	
CE000012	CEDS-010-SEFN-41-S08-N210	Standard	
CE000073	CEDS-010-SEFE-41-S08-N210	Knob style override	

SOLENOID OPERATED CARTRIDGE

CEDS-010-SEFN

DIRECT OPERATED SPOOL TYPE

ATLANTIC Fluid Tech

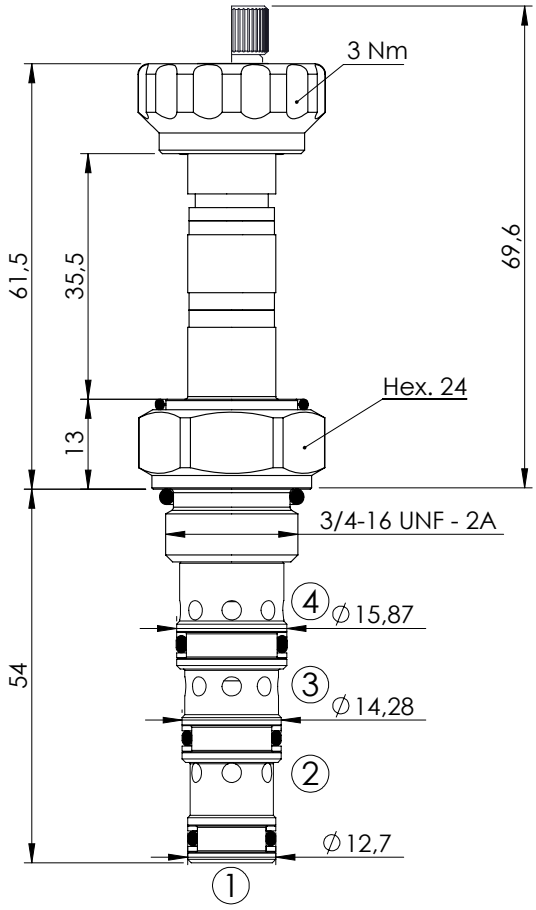

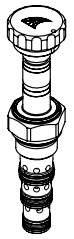

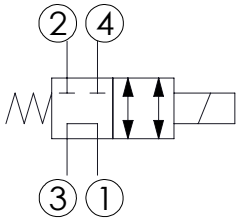

SPECIFICATIONS

Max. operating pressure:	210 bar
Rated flow:	10 l/min
Cavity:	SAE-08-4N
Weight:	0,14 kg
Min. voltage required:	90% of nominal
Coil type:	M7 type
Leakage:	120cm^3/min
Seal kit:	RB700101

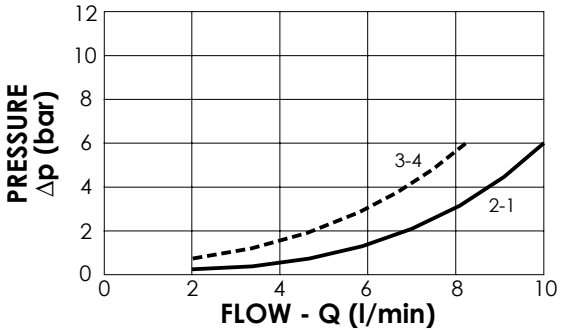

NOTES

Installation torque:	45 - 50 Nm

OPTIONS

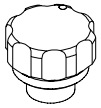

Standard

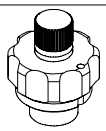

Knob style override

ORDERING CODES

Quick code	Description	Options	
CE000006	CEDS-010-SEFN-43-S08-N210	Standard	
CE000074	CEDS-010-SEFE-43-S08-N210	Knob style override	

SOLENOID OPERATED CARTRIDGE

CEES-010-SEFN

DIRECT OPERATED SPOOL TYPE

ATLANTIC Fluid Tech

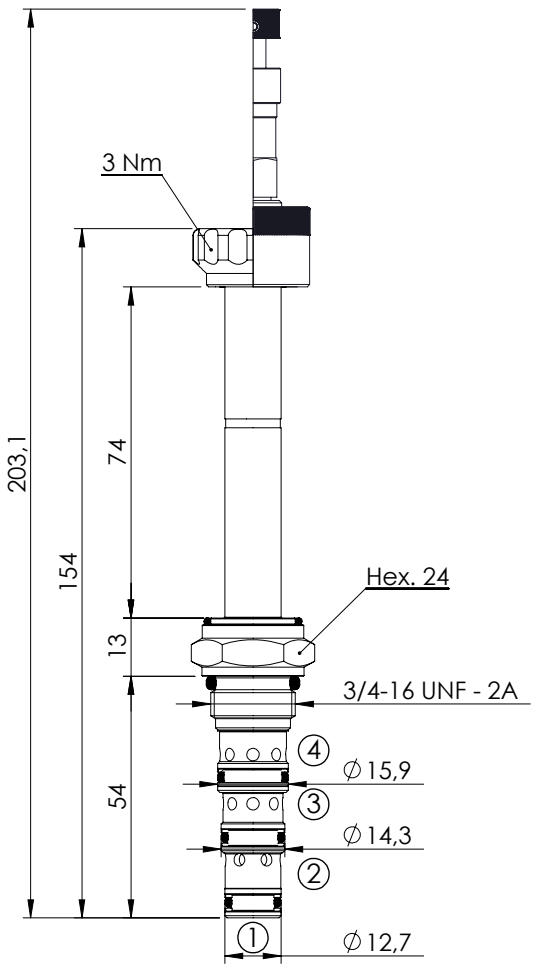

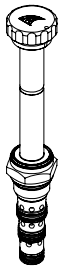

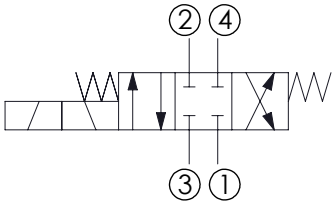

SPECIFICATIONS

Max. operating pressure:	210 bar
Rated flow:	10 l/min
Cavity:	SAE-08-4N
Weight:	0,18 kg
Min. voltage required:	90% of nominal
Coil type:	M7 type
Leakage:	120cm^3/min
Seal kit:	RB700101

NOTES

Installation torque:	45 - 50 Nm

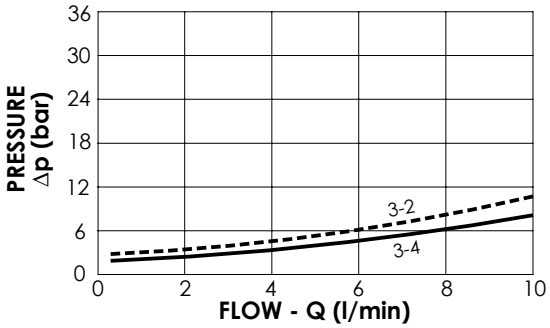

OPTIONS

Standard

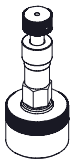

Push and pull manual override

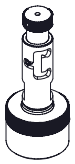

Push pull and twist manual override

ORDERING CODES

Quick code	Description	Options	
CE000028	CEES-010-SEFN-51-S08-N210	Standard	
CE000098	CEES-010-SEFL-51-S08-N210	Push and pull manual override	
CE000189	CEES-010-SEFG-51-S08-N210	Push pull and twist manual override	

SOLENOID OPERATED CARTRIDGE

CEES-010-SEFN

DIRECT OPERATED SPOOL TYPE

ATLANTIC Fluid Tech

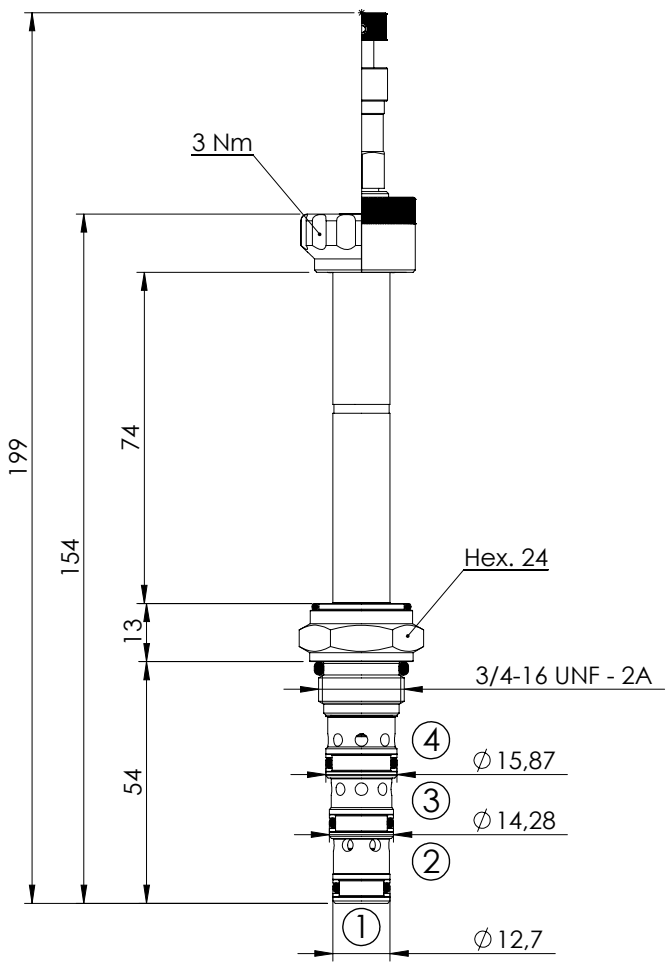

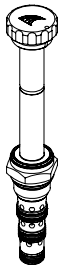

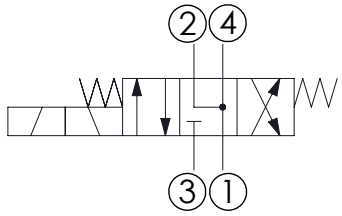

SPECIFICATIONS

Max. operating pressure:	210 bar
Rated flow:	10 l/min
Cavity:	SAE-08-4N
Weight:	0,18 kg
Min. voltage required:	90% of nominal
Coil type:	M7 type
Leakage:	120cm^3/min
Seal kit:	RB700101

NOTES

Installation torque:	45 - 50 Nm

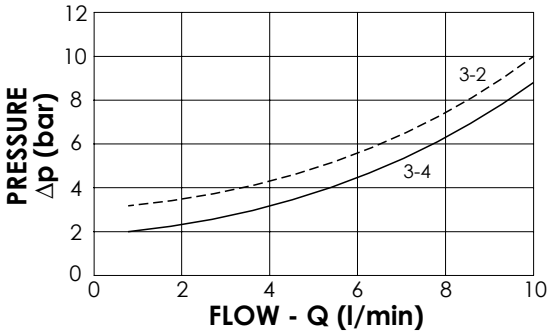

OPTIONS

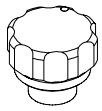

Standard

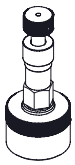

Push and pull manual override

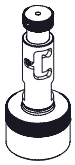

Push pull and twist manual override

ORDERING CODES

Quick code	Description	Options	
CE000029	CEES-010-SEFN-52-S08-N210	Standard	
CE000095	CEES-010-SEFL-52-S08-N210	Push and pull manual override	
CE000145	CEES-010-SEFG-52-S08-N210	Push pull and twist manual override	

SOLENOID OPERATED CARTRIDGE

CEES-010-SEFN

DIRECT OPERATED SPOOL TYPE

ATLANTIC Fluid Tech

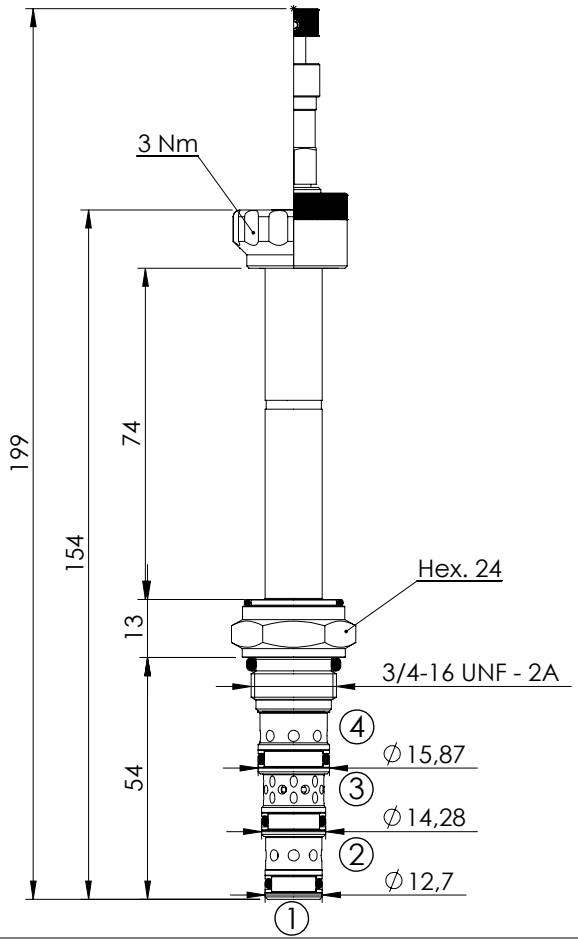

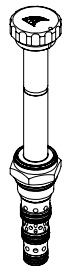

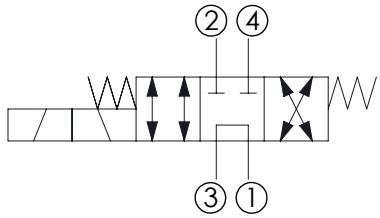

SPECIFICATIONS

Max. operating pressure:	210 bar
Rated flow:	10 l/min
Cavity:	SAE-08-4N
Weight:	0,18 kg
Min. voltage required:	90% of nominal
Coil type:	M7 type
Leakage:	120cm^3/min
Seal kit:	RB700101

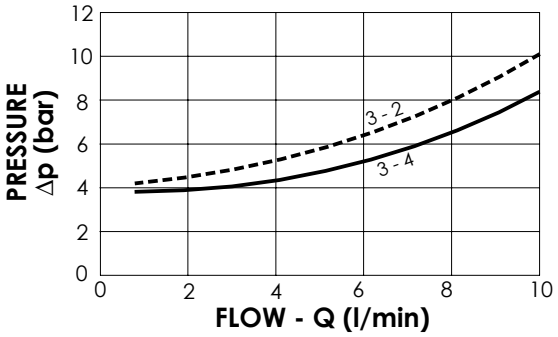

NOTES

Installation torque:	45 - 50 Nm

OPTIONS

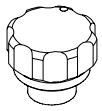

Standard

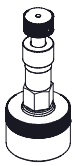

Push and pull manual ovveride

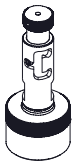

Push pull and twist manual override

ORDERING CODES

Quick code	Description	Options	
CE000083	CEES-010-SEFN-53-S08-N210	Standard	
CE000097	CEES-010-SEFL-53-S08-N210	Push and pull manual override	
CE000185	CEES-010-SEFG-53-S08-N210	Push pull and twist manual override	

SOLENOID OPERATED CARTRIDGE

CEES-010-SEFN

DIRECT OPERATED SPOOL TYPE

ATLANTIC Fluid Tech

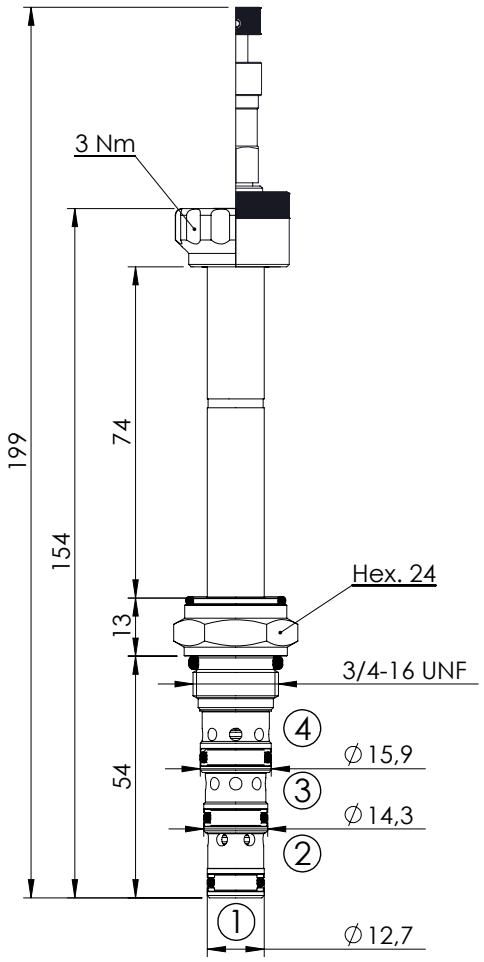

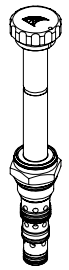

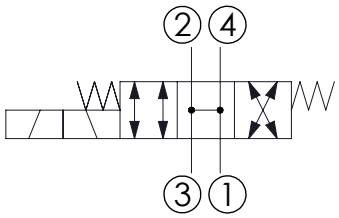

SPECIFICATIONS

Max. operating pressure:	210 bar
Rated flow:	10 l/min
Cavity:	SAE-08-4N
Weight:	0,18 kg
Min. voltage required:	90% of nominal
Coil type:	M7 type
Leakage:	120cm^3/min
Seal kit:	RB700101

NOTES

Installation torque:	45 - 50 Nm

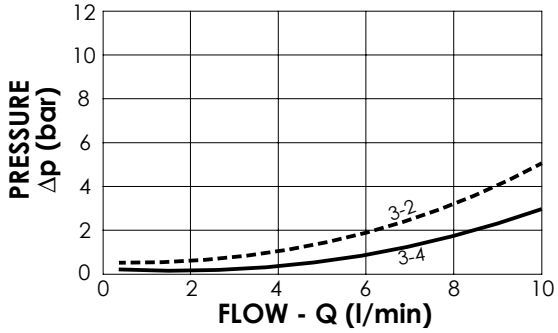

OPTIONS

Standard

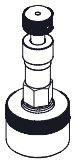

Push and pull manual override

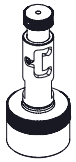

Push pull and twist manual override

ORDERING CODES

Quick code	Description	Options	
CE000018	CEES-010-SEFN-54-S08-N210	Standard	
CE000099	CEES-010-SEFL-54-S08-N210	Push and pull manual override	
CE000188	CEES-010-SEFG-54-S08-N210	Push pull and twist manual override	

ATLANTIC
Fluid Tech

SECTION 16

Proportional Cartridges

MANAGEMENT SYSTEM CERTIFICATION
DNV·GL
ISO 9001 = ISO 14001
OHSAS 18001

PROPORTIONAL CARTRIDGES

ATLANTIC Fluid Tech

Hydraulic scheme	Valve description	Valve type	Rated flow (l/min)	Max. pressure (bar)	Installation	Main port size or cavity type	Page
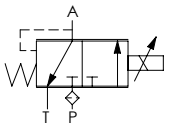	CECS-005-PRPN	Proportional, direct operated, pressure reducing	5	50	DT04-2P	VP000371	16.01.**010**
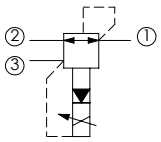	CECT-080-PRPS	Proportional, pilot operated, reducing and relieving	80	250	Cartridge	SAE-10-3N	16.02.**020**
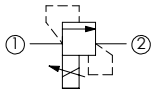	CEBD-005-PLPS	Proportional, poppet type relief	5	350	Cartridge	SAE-08-2N	16.03.**030**
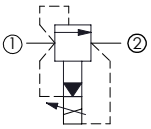	CEBT-120-PLPS	Proportional, pilot operated, relieving	120	350	Cartridge	SAE-10-2N	16.04.**040**
	CEBT-120-PMPS	Proportional, pilot operated, relieving, for fan drive	120	350	Cartridge	SAE-10-2N	16.04.**050**
	CEBT-300-PLPS	Proportional, pilot operated, relieving	300	350	Cartridge	SAE-16-2N	16.04.**060**
	CEBT-500-PLPS	Proportional, pilot operated, relieving	500	350	Cartridge	SAE-20-2N	16.04.**070**
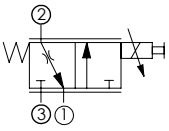	CECS-020-FSPS	Proportional, non compensated, flow regulator	20	210	Cartridge	SAE-10-3N	16.05.**080**
	CECS-030-FSPS	Proportional, non compensated, flow regulator	30	210	Cartridge	SAE-10-3N	16.05.**080**
	CECS-040-FSPS	Proportional, non compensated, flow regulator	40	210	Cartridge	SAE-10-3N	16.05.**080**
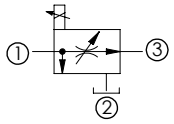	CECS-140-FRPV	Proportional, direct operated, flow regulator	140	320	Cartridge	SAE-16-3N	16.06.**090**
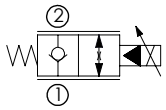	CEBP-070-NCPN	Proportional, non compensated, normally closed	30	350	Cartridge	VP000057	10.07.**100**
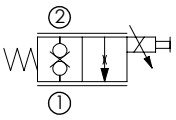	CEBS-020-PEPS	Proportional, normally closed	20	210	Cartridge	SAE-08-2N	10.08.**110**
PROPORTIONAL CONTROLLER	ELPC-030-SCCB	Proportional electronic controller	-	-	DIN 43650	-	10.09.**120**

SOLENOID OPERATED CARTRIDGE

CECS-005-PRPN

PROPORTIONAL VALVES DIRECT OPERATED PRESSURE REDUCING

ATLANTIC Fluid Tech

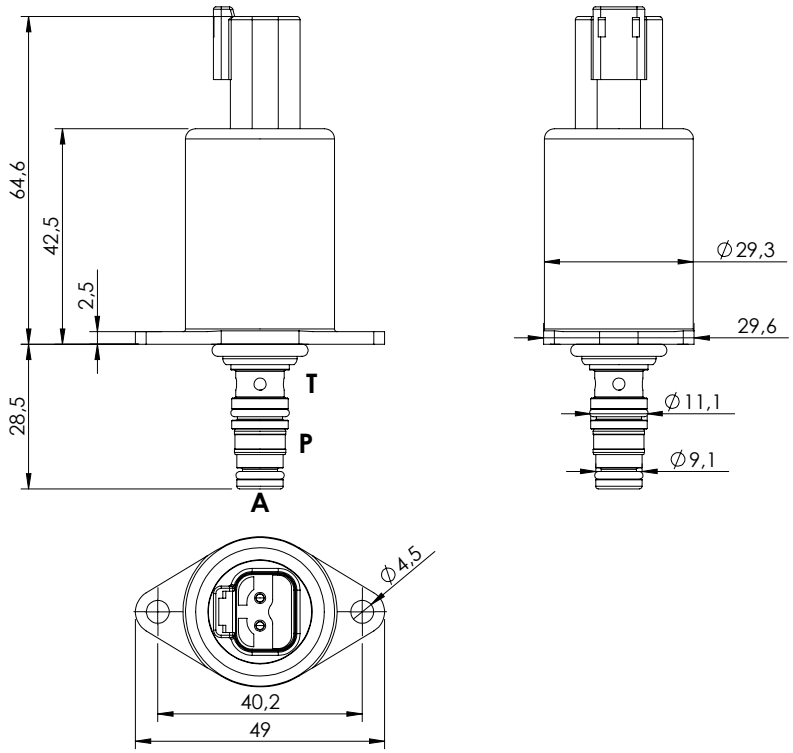

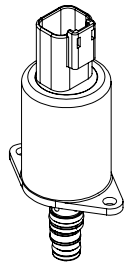

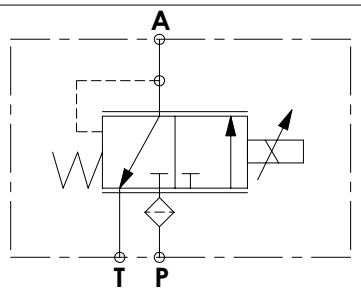

SPECIFICATIONS

Max. P pressure:	50 bar
Max. T pressure:	30 bar
Rated flow:	5 l/min
Cavity:	VP000371
Weight:	0,200 kg
Connector type:	Deutsch DT04-2P
Internal leakage:	15 cc/min (@ 25 bar,46 cSt)
Protection class:	Up to IP6K6 / IPX9K
PWM range recommended:	100 Hz
Filter on P port:	125 µm
Mounting screw:	2 x M4x10 class 8.8
Mounting screw torque:	3.5 Nm
Mounting screw not included	
Seal kit:	RC700371

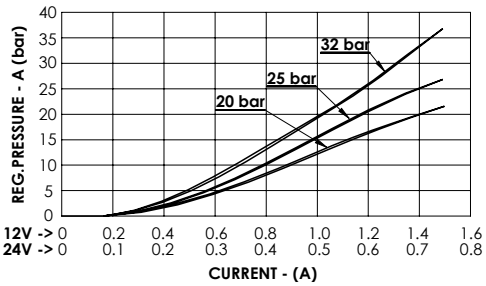

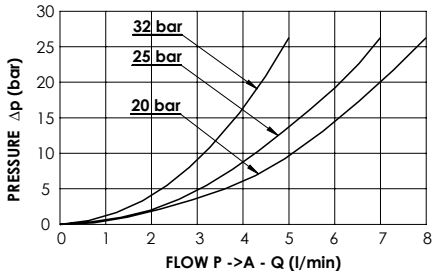

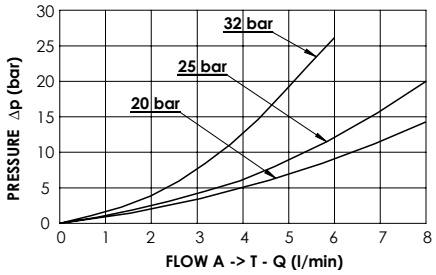

ORDERING CODES

Quick code	Description	Regulated pressure range (bar)	Voltage (V)	Current (mA)	Resistance (Ω) ± 5%	Hysteresis (bar) pA
CE000850	CECS-005-PRPN-95-371-N020-12DT	0-20	12	1500	4.72	< 0.4
CE000851	CECS-005-PRPN-95-371-N020-24DT	0-20	24	750	20.8	< 0.4
CE000852	CECS-005-PRPN-95-371-N025-12DT	0-25	12	1500	4.72	< 0.5
CE000853	CECS-005-PRPN-95-371-N025-24DT	0-25	24	750	20.8	< 0.5
CE000893	CECS-005-PRPN-95-371-N032-12DT	0-32	12	1500	4.72	< 0.7
CE000862	CECS-005-PRPN-95-371-N032-24DT	0-32	24	750	20.8	< 0.7

SOLENOID OPERATED CARTRIDGE

CECT-080-PRPS

PROPORTIONAL VALVES PILOTED OPERATED PRESSURE REDUCING AND RELIEVING

ATLANTIC Fluid Tech

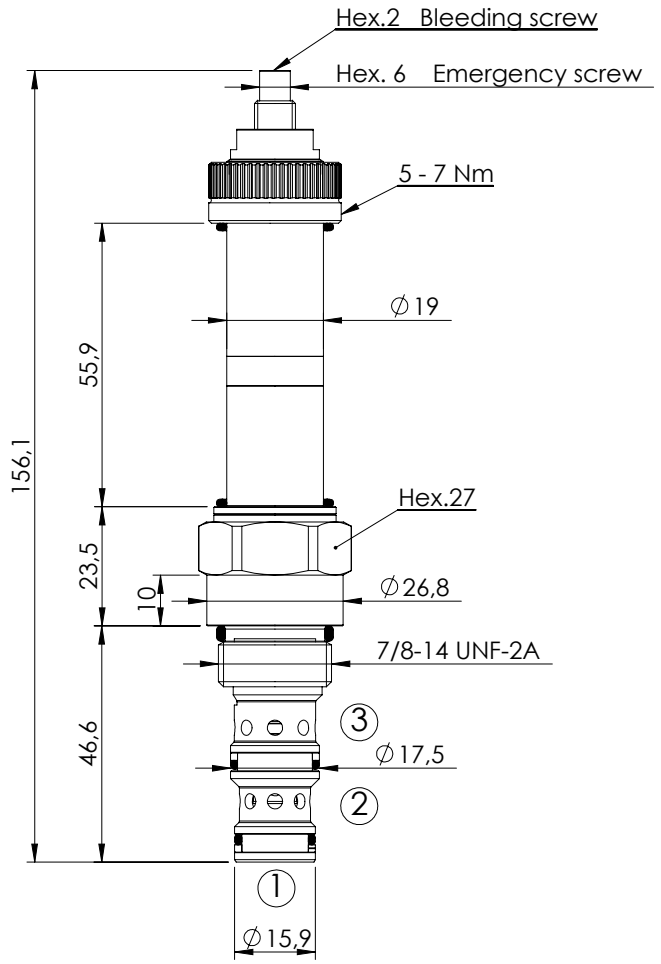

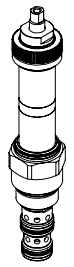

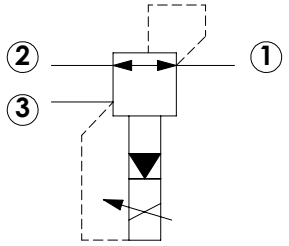

SPECIFICATIONS

Max. operating pressure:	250 bar
Rated flow:	80 l/min
Cavity:	SAE-10-3N
Weight:	0,22 kg
Coil type:	M15 type
Installation torque:	55 - 62 Nm
PWM range recommended:	120-150 Hz
Seal kit:	RA100092

NOTES

Bleed air before use

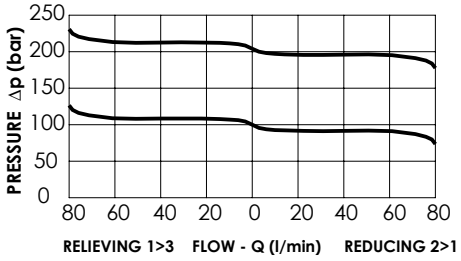

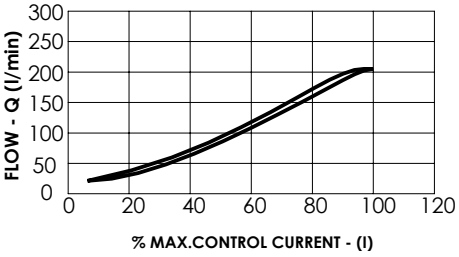

ORDERING CODES

Quick code	Description	Regulated pressure range (bar)	Threshold current (with12VDC coil)	Max control current (with 12V DC coil)	Override
CE000122	CECT-080-PRPS-96-S10-V210	20-220	200 mA (+/-7%)	1700 mA (+/-7%)	Screw style

SOLENOID OPERATED CARTRIDGE

CEBD-005-PLPS

PROPORTIONAL VALVES POPPET TYPE RELIEF

ATLANTIC Fluid Tech

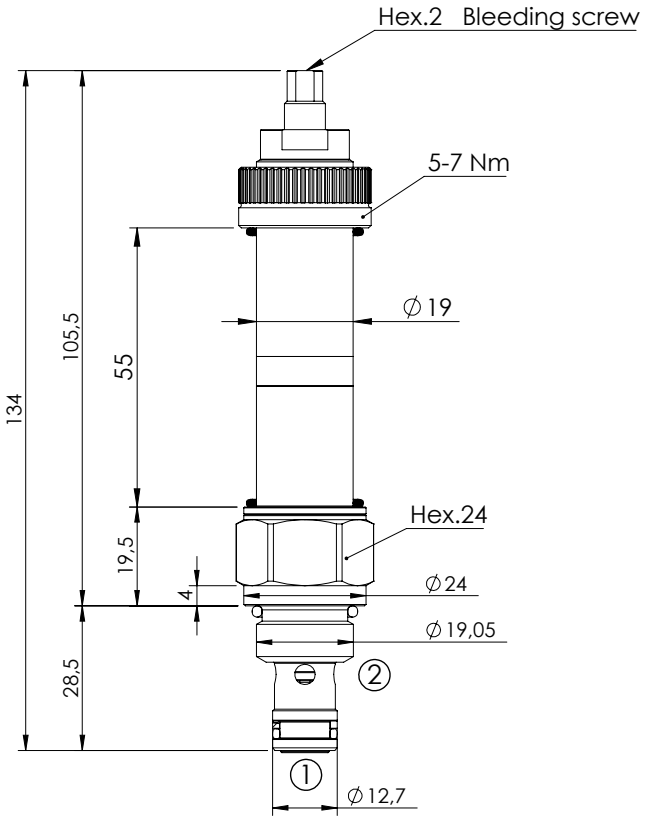

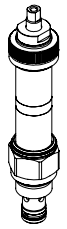

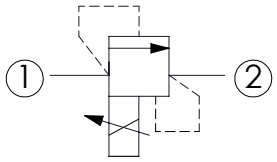

SPECIFICATIONS

Max. operating pressure:	350 bar
Rated flow:	5 l/min
Cavity:	SAE-08-2N
Weight:	0,16 kg
Coil type:	M15 type
PWM range recommended:	150-180 Hz
Installation torque:	45 - 50 Nm
Seal kit:	RA100081

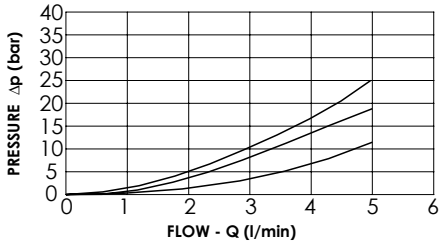

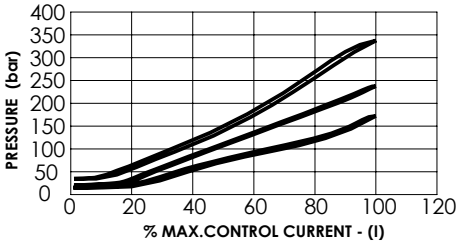

NOTES

Bleed air before use

ORDERING CODES

Quick code	Description	Setting range (bar)	Threshold current (with12VDC coil)	Max control current (with 12V DC coil)	Override
CE000910	CEBD-005-PLPS-92-S08-V350	25-340	250 mA (+/-7%)	1800 mA (+/-7%)	Screw style
CE000911	CEBD-005-PLPS-92-S08-V200	17-250	200 mA (+/-7%)	1800 mA (+/-7%)	Screw style
CE000912	CEBD-005-PLPS-92-S08-V100	9-160	200 mA (+/-7%)	1800 mA (+/-7%)	Screw style

SOLENOID OPERATED CARTRIDGE

CEBT-120-PLPS

PROPORTIONAL VALVES
PILOTED RELIEF
SPOOL TYPE

ATLANTIC Fluid Tech

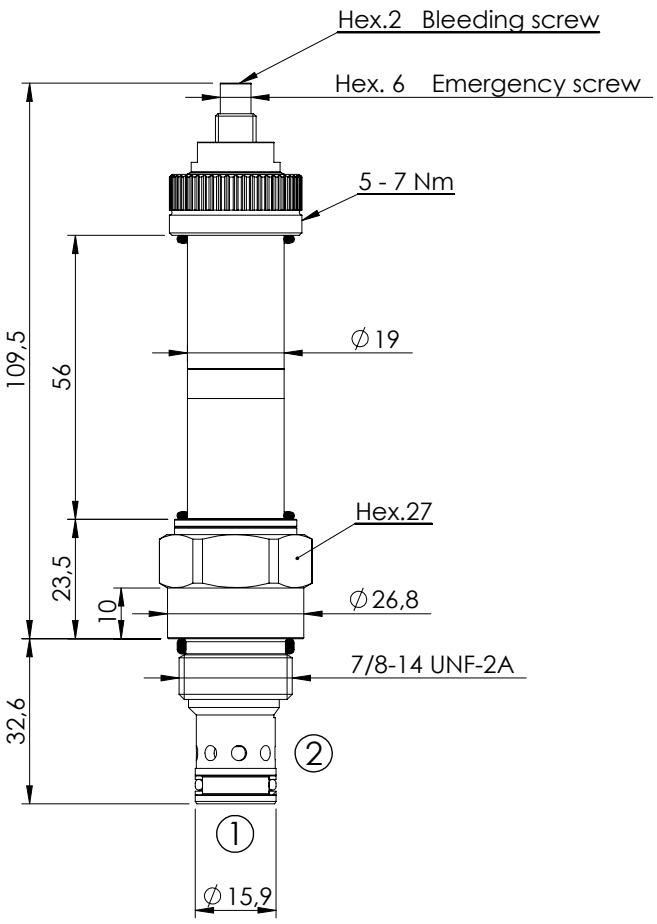

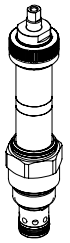

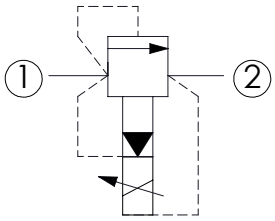

SPECIFICATIONS

Max. operating pressure:	350 bar
Rated flow:	120 l/min
Cavity:	SAE-10-2N
Weight:	0,2 kg
Coil type:	M15 type
Max. int. leakage:	200 cm^3/min (@46 cSt)
Installation torque:	55 - 62 Nm
PWM range recommended:	150-180 Hz
Seal kit:	RB100082

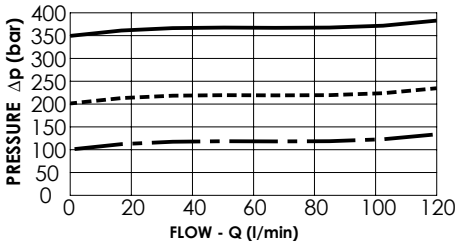

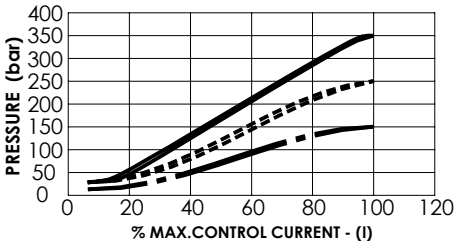

CE000119 1>2———— CE000120 1>2------ CE000121 1>2—— - ——

NOTES

Bleed air before use

ORDERING CODES

Quick code	Description	Setting range (bar)	Threshold current (with12VDC coil)	Max control current (with 12V DC coil)	Override
CE000119	CEBT-120-PLPS-91-S10-V350	30-350	200 mA (+/-7%)	1600 mA (+/-7%)	Screw style
CE000120	CEBT-120-PLPS-91-S10-V200	20-220	200 mA (+/-7%)	1700 mA (+/-7%)	Screw style
CE000121	CEBT-120-PLPS-91-S10-V100	15-90	200 mA (+/-7%)	1700 mA (+/-7%)	Screw style

SOLENOID OPERATED CARTRIDGE

CEBT-120-PMPS

PROPORTIONAL VALVES
PILOTED RELIEF
SPOOL TYPE FOR FAN DRIVE

ATLANTIC Fluid Tech

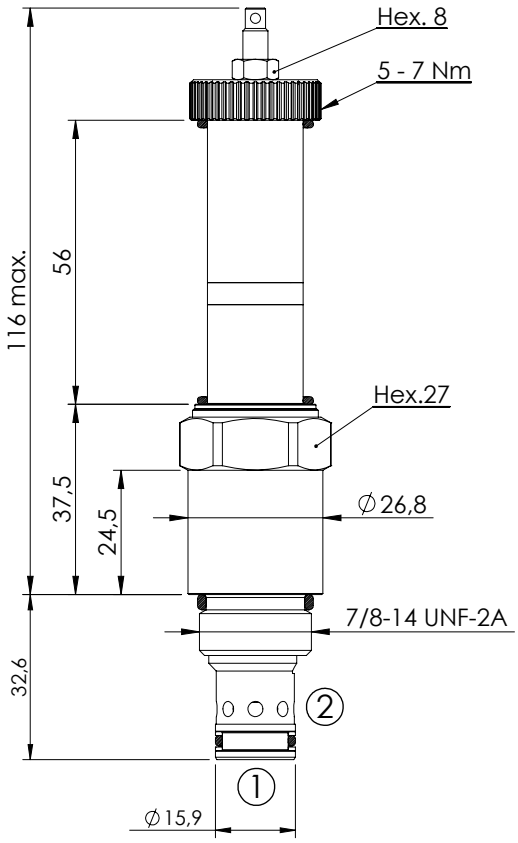

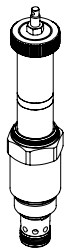

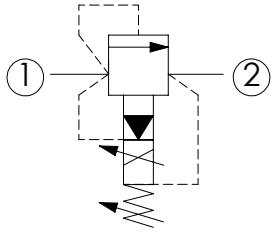

SPECIFICATIONS

Max. operating pressure:	350 bar
Rated flow:	120 l/min
Cavity:	SAE-10-2N
Weight:	0,21 kg
Coil type:	M15 type
Max. int. leakage:	200 cm^3/min (@46 cSt)
Installation torque:	55 - 62 Nm
PWM range recommended:	150-180 Hz
Seal kit:	RB100082

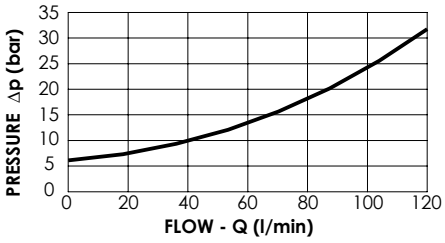

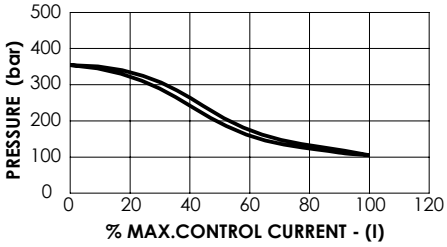

NOTES

Pressure decreasing with current increasing.
Maximum pressure value can be adjusted manually within a range.

ORDERING CODES

Quick code	Description	Minimum pressure (bar)	Max. pressure setting range (bar)	Standard setting (bar)	Threshold current (with12VDC coil)	Max control current (with 12V DC coil)
CE000890	CEBT-120-PMPS-91-S10-V350	7	100-350	210	200 mA (+/-7%)	1600 mA (+/-7%)

SOLENOID OPERATED CARTRIDGE

CEBT-300-PLPS

PROPORTIONAL VALVES
PILOTED RELIEF
SPOOL TYPE

ATLANTIC Fluid Tech

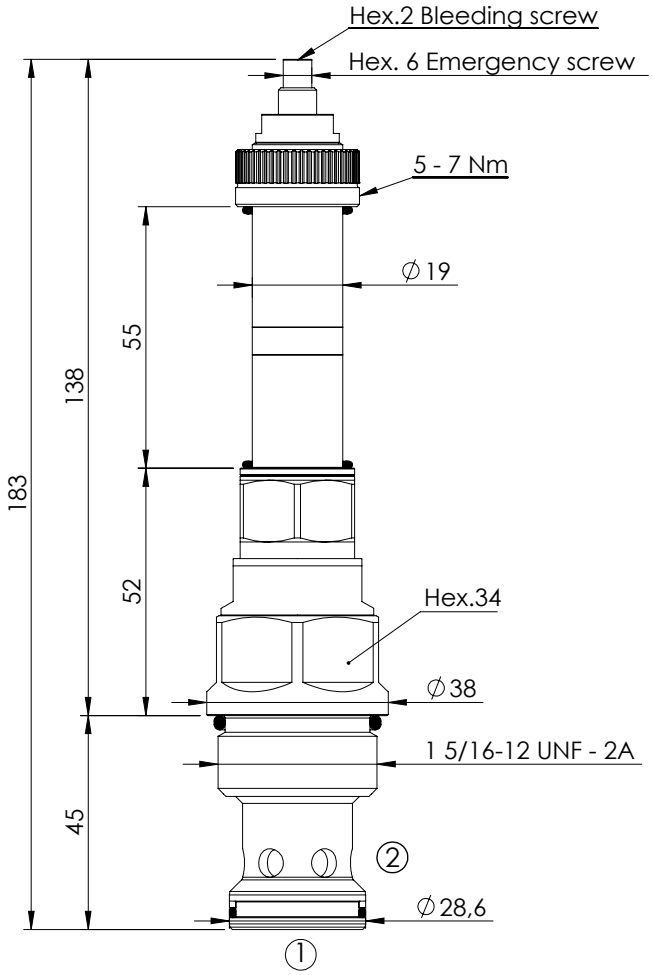

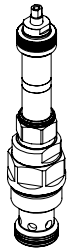

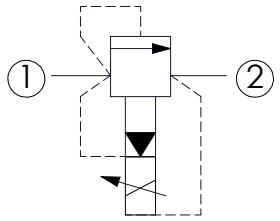

SPECIFICATIONS

Max. operating pressure:	350 bar
Rated flow:	300 l/min
Cavity:	SAE-16-2N
Weight:	0,5 kg
Coil type:	M15 type
Max. int. leakage:	200 cm^3/min (@46 cSt)
Installation torque:	118 - 132 Nm
PWM range recommended:	150-180 Hz
Seal kit:	RA100084

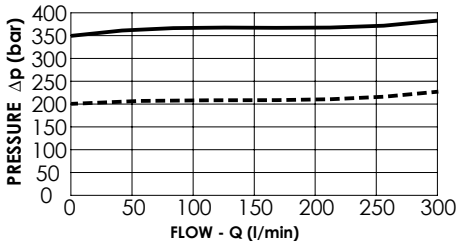

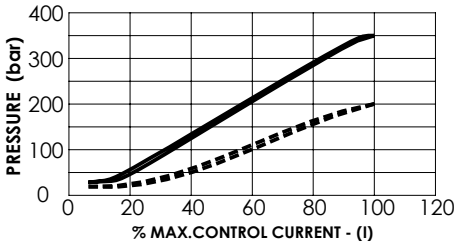

CE000880 1>2 ———— CE000895 1>2 ---------

NOTES

Bleed air before use

ORDERING CODES

Quick code	Description	Proportional setting range (bar)	Threshold current (with12VDC coil)	Max control current (with 12V DC coil)	Override
CE000880	CEBT-300-PLPS-91-S16-V350	30-350	200 mA (+/-7%)	1600 mA (+/-7%)	Screw style
CE000895	CEBT-300-PLPS-91-S16-V200	20-200	200 mA (+/-7%)	1700 mA (+/-7%)	Screw style

SOLENOID OPERATED CARTRIDGE

CEBT-500-PLPS

PROPORTIONAL VALVES
PILOTED RELIEF
SPOOL TYPE

ATLANTIC Fluid Tech

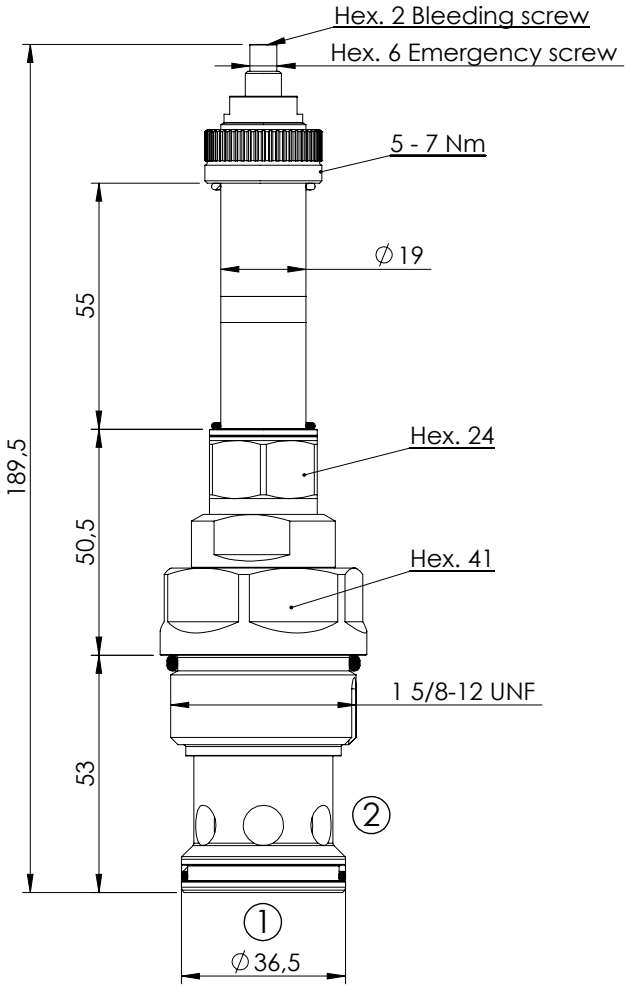

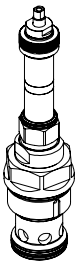

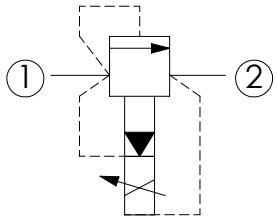

SPECIFICATIONS

Max. operating pressure:	350 bar
Rated flow:	500 l/min
Cavity:	SAE-20-2N
Weight:	0,7 kg
Coil type:	M5 type
Max. int. leakage:	200 cm^3/min (@46 cSt)
Installation torque:	230 - 250 Nm
PWM range recommended:	150-180 Hz
Seal kit:	RA100085

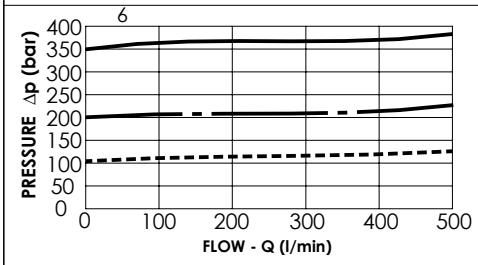

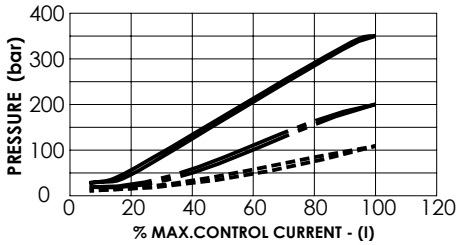

CE000770 1>2 ————
CE000771 1>2 — - —
CE000772 1>2 - - - - - -

NOTES

Bleed air before use

ORDERING CODES

Quick code	Description	Setting range (bar)	Threshold current (with12VDC coil)	Max control current (with 12V DC coil)	Override
CE000770	CEBT-500-PLPS-91-S20-V350	30-350	200 mA (+/-7%)	1600 mA (+/-7%)	Screw style
CE000771	CEBT-500-PLPS-91-S20-V200	20-220	200 mA (+/-7%)	1700 mA (+/-7%)	Screw style
CE000772	CEBT-500-PLPS-91-S20-V100	15-90	200 mA (+/-7%)	1700 mA (+/-7%)	Screw style

SOLENOID OPERATED CARTRIDGE

CECS-040-FSPS

PROPORTIONAL VALVES NON COMPENSATED FLOW REGULATOR

ATLANTIC Fluid Tech

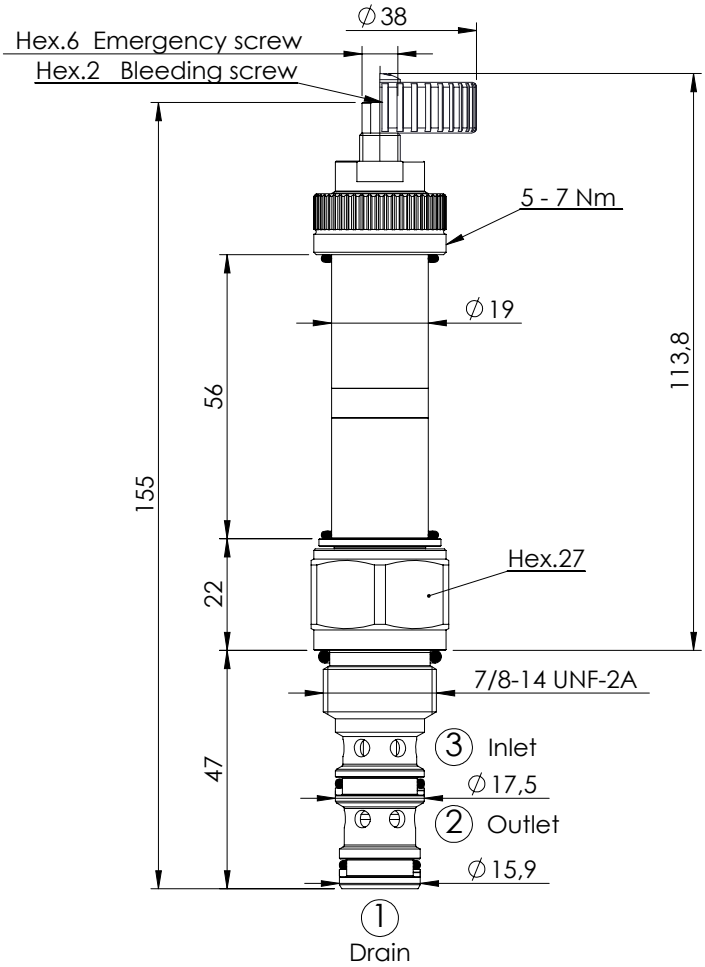

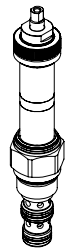

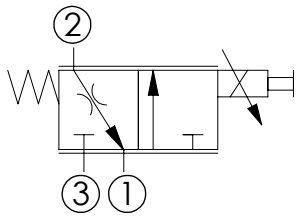

SPECIFICATIONS

Max. operating pressure:	210 bar
Rated flow:	40 l/min
Cavity:	SAE-10-3N
Weight:	0,22 kg
Coil type:	M15 type
Max. int. leakage: 150 cm^3/min (@46 cSt)	
Installation torque:	55 - 62 Nm
Recommended PWM range:	150-180 Hz
Seal kit:	RA100092

NOTES

Bleed air before use

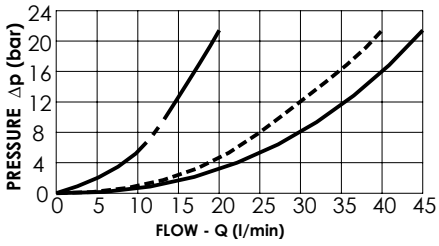

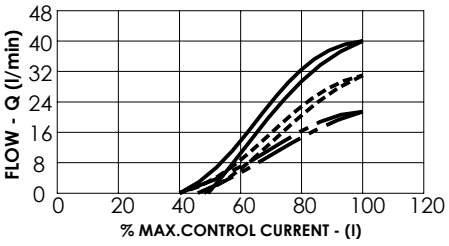

CE000111 3>2 ——— CE000112 3>2 - - - - - CE000113 3>2 —— - ——

ORDERING CODES

Quick code	Description	Rated flow (l/min)	Threshold current (with12VDC coil)	Max control current (with 12V DC coil)	Override
CE000111	CECS-040-FSPS-85-S10-V210	40	800 mA (+/-7%)	1600 mA (+/-7%)	Screw style
CE000112	CECS-030-FSPS-85-S10-V210	30	700 mA (+/-7%)	1500 mA (+/-7%)	Screw style
CE000113	CECS-020-FSPS-85-S10-V210	20	700 mA (+/-7%)	2400 mA (+/-7%)	Screw style
CE000960	CECS-040-FSPV-85-S10-V210	40	800 mA (+/-7%)	1600 mA (+/-7%)	Handknob style
CE000906	CECS-030-FSPV-85-S10-V210	30	700 mA (+/-7%)	1500 mA (+/-7%)	Handknob style
CE000489	CECS-020-FSPV-85-S10-V210	20	700 mA (+/-7%)	2400 mA (+/-7%)	Handknob style

PROPORTIONAL CARTRIDGE

CECS-140-FRPM

PROPORTIONAL VALVES FLOW REGULATOR 3 WAYS COMBINATION

ATLANTIC Fluid Tech

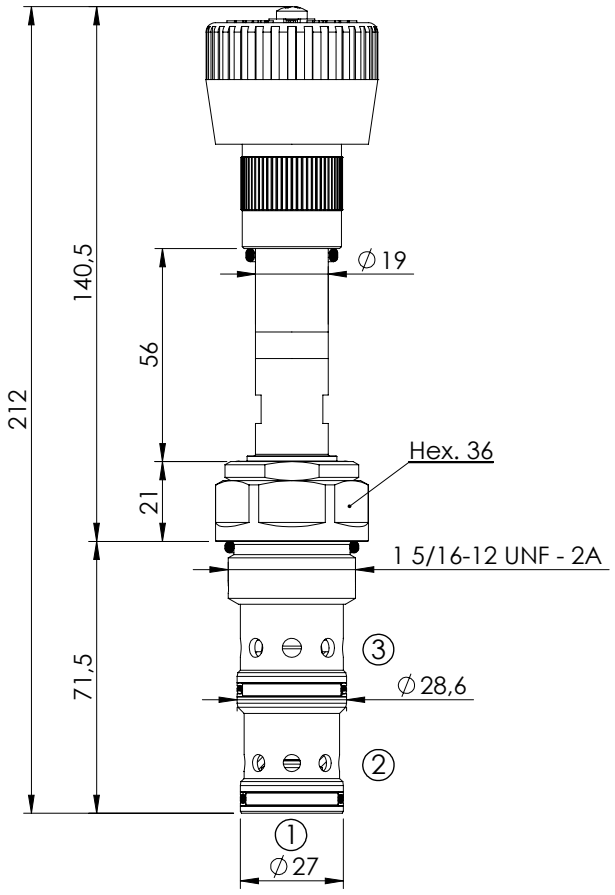

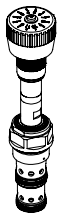

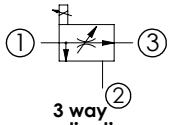

3 way application

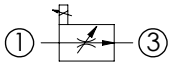

2 way application, port 2 not connected

SPECIFICATIONS

Max. operating pressure:	320 bar
Maximum flow (in inlet port ①):	140 l/min
Max. flow ① to ③:	100 l/min(regulated)
Pressure differential (① to ③):	7 - 11 bar
Hysteresis (ramp up and down):	1,5 - 3 %
Coil type:	M15
Voltage:	12- 24 V dc
Max current (12 V dc):	1800 mA
Max current (24 V dc):	1200 mA
Coil resistance (12 V dc):	3,3-5,8 Ω
Coil resistence (24 V dc):	7.2-13 Ω
Weight:	0,6 kg
Cavity:	SAE-16-3N
Installation torque:	130 -145 Nm
Surface protection proportional solenoid:	Coating DIN 50962 Fe8//ZiNi with passivation
Seal kit:	RB100094

Δp ① to ③ (② open to T)

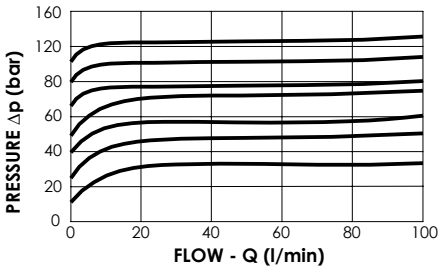

Δp ① to ② (valve not energized)

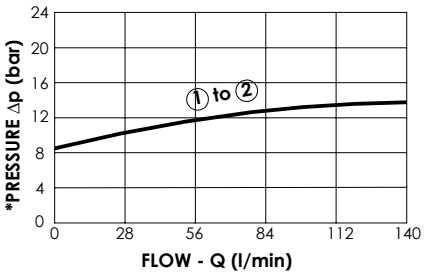

Q vs I curve

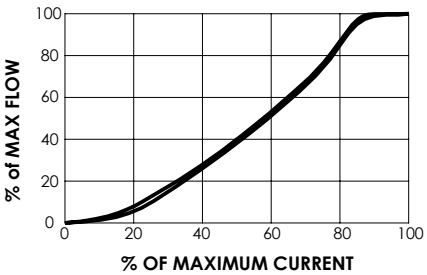

ORDERING CODES

Quick code	Description	Regulated flow range (l/min)	Adjustment type	
CE000831	CECS-140-FRPM-15-S16-V320	0 - 15	Handknob	
CE000832	CECS-140-FRPM-25-S16-V320	0 - 25	Handknob	
CE000833	CECS-140-FRPM-40-S16-V320	0 - 40	Handknob	
CE000834	CECS-140-FRPM-50-S16-V320	0 - 50	Handknob	
CE000835	CECS-140-FRPM-65-S16-V320	0 - 65	Handknob	
CE000836	CECS-140-FRPM-80-S16-V320	0 - 80	Handknob	
CE001034	CECS-140-FRPM-100-S16-V320	0 - 100	Handknob	

SOLENOID OPERATED CARTRIDGE

CEBS-020-PEPS

PROPORTIONAL VALVE NORMALLY CLOSED

ATLANTIC Fluid Tech

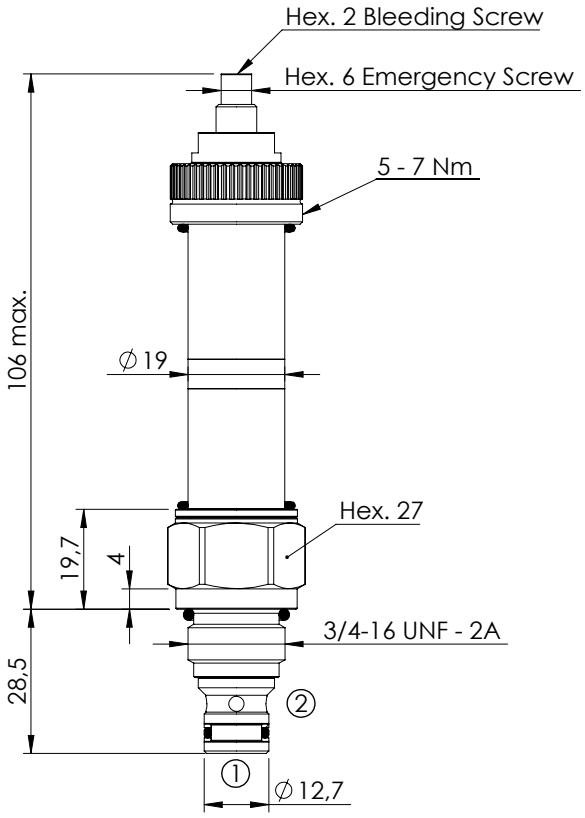

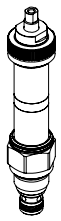

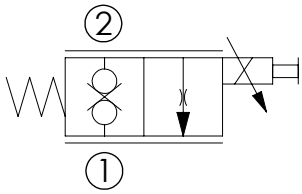

SPECIFICATIONS

Max. operating pressure:	210 bar
Rated flow:	20 l/min
Cavity:	SAE-08-2N
Weight:	0,15 kg
Coil type:	M15 type
Installation torque:	45 - 50 Nm
Recommended PWM range:	120-150 Hz
Seal kit:	RA100081

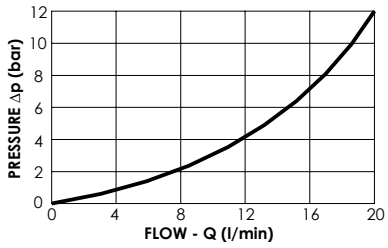

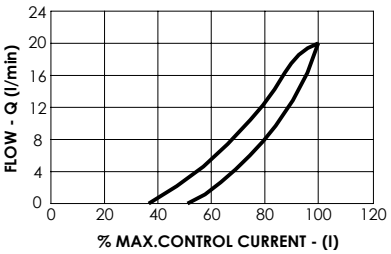

NOTES

Bleed air before use

ORDERING CODES

Quick code	Description	Rated flow (l/min)	Threshold current (with12VDC coil)	Max control current (with 12V DC coil)	Override
CE000943	CEBS-020-PEPS-103-S08-V210	20	1000 mA (+/-7%)	2000 mA (+/-7%)	Screw style

PROPORTIONAL CARTRIDGE

CEBP-070-NCPN

PROPORTIONAL VALVE NON COMPENSATED NORMALLY CLOSED

ATLANTIC Fluid Tech

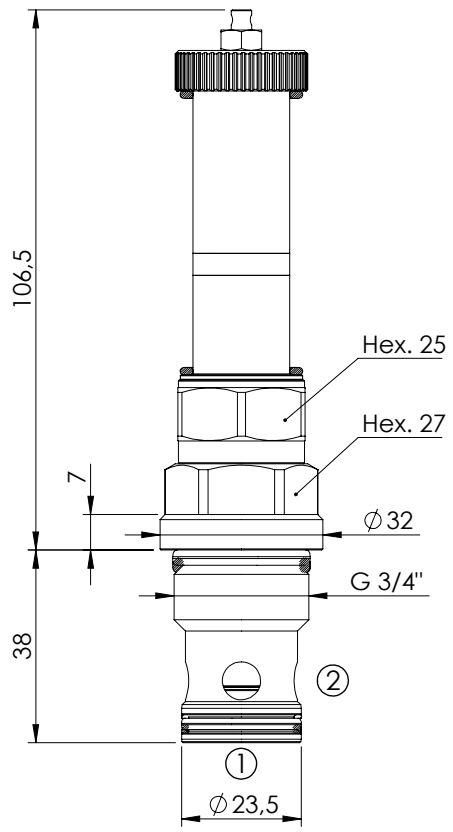

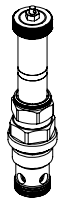

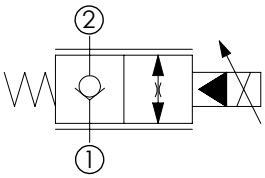

SPECIFICATIONS

Max. operating pressure:	350 bar
Rated flow:	70 l/min
Cavity:	VP000057
Weight:	0,26 kg
Coil type:	M15
Installation torque:	110 - 130 Nm
PWM range recommended:	150-180 Hz
Seal kit:	RD900057

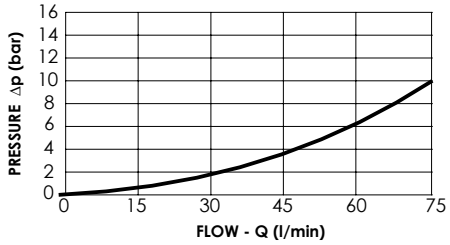

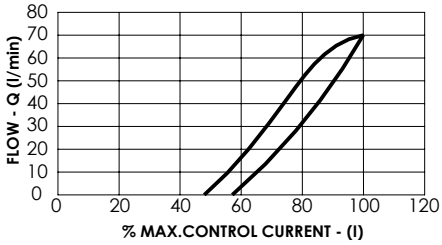

NOTES

ORDERING CODES

Quick code	Description	Setting range (bar)	Threshold current (with12VDC coil)	Max control current (with 12V DC coil)	Override
CE001026	CEBP-070-NCPN-112-057-N350	20	800 mA (+/-7%)	1800 mA (+/-7%)	Screw style

PROPORTIONAL VALVE CONTROLLER

ELPC-030-SCCB

ATLANTIC Fluid Tech

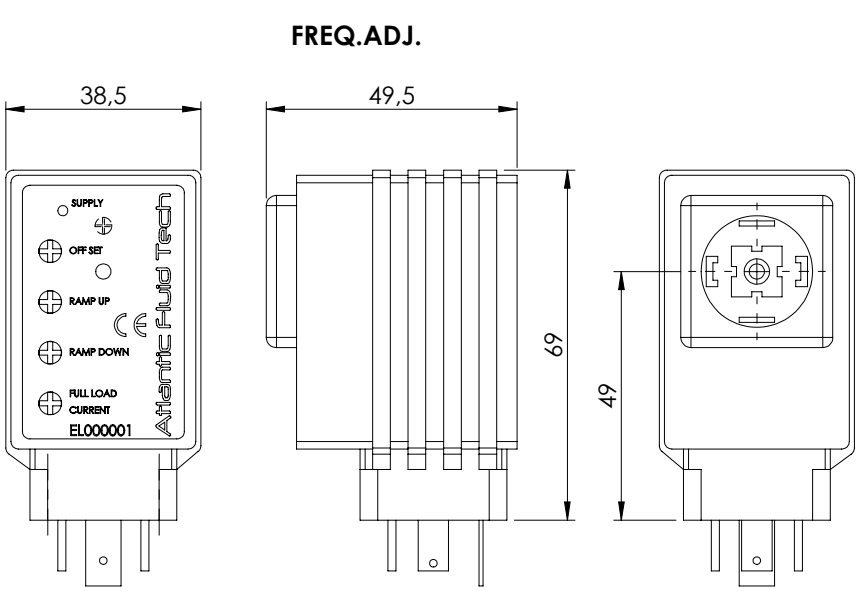

Max torque 0,5 Nm

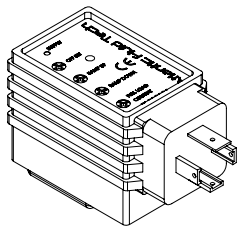

SPECIFICATIONS

Supply voltage: 12 - 30 VDC
Coil rating must be matched with supply voltage:
Rcoil<(Vsupply-1,5V) / Imax

Control input signal options:
5KΩ external potentiometer
(accepts 2KΩ to 10KΩ), or 0-10 VDC signal
(see connection diagram)

Output current: up to 2A

Minimum current: 0 - 0,6 A

Max current deviation in temperature range: 3%

Ramp up / ramp down: 0,1 to 10 sec
Ramp setting indipendent from current range

PWM frequency: 100 - 500 Hz

Operating conditions: -20 TO +70°C
0 to 85% relative humidity

Environmental protection: IP65
with cover and seals installed

Connector type: DIN 43650 - ISO 4400

CONNECTION EXAMPLE WITH JOYSTICK OR POTENTIOMETER

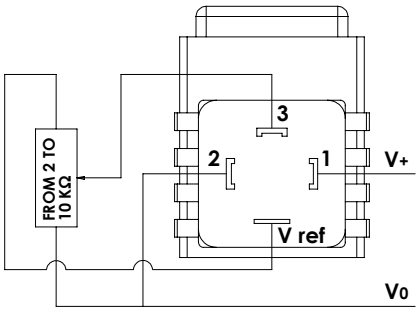

CONNECTION EXAMPLE WITH ANALOGIC SIGNAL

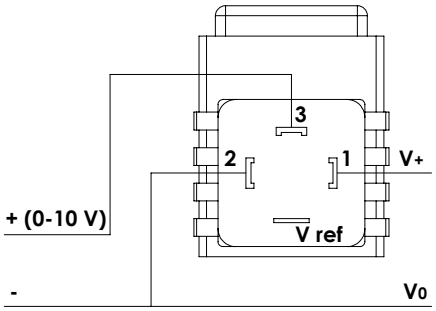

IMPORTANT

DO NOT REMOVE controller from solenoid when energized to avoid the risk of damaging it

SETTING INSTRUCTIONS

SUPPLY: led is on when current is supplied

OFFSET: to be used to set minimum current value (I min), turn clockwise to increase setting

RAMP UP: to be used to set the ramp time from minimum (I min) to maximum current value (I max)

RAMP DOWN: to be used to set the ramp time from maximum (I max) to minimum current value (I min)

FULL LOAD CURRENT:to be used to set maximum current value (I max), turn clockwise to increase setting

FREQ. ADJ.: this trimmer is inside the controller and is preset by factory, to be used to modify the PWM frequency

ORDERING CODES

Quick code	Description	
EL000001	Proportional controller ELPC-030-SCCB	

ATLANTIC
Fluid Tech

SECTION 17

Diverter Valves

MANAGEMENT SYSTEM CERTIFICATION
DNV·GL
ISO 9001 = ISO 14001
OHSAS 18001

DIVERTER VALVES

ATLANTIC Fluid Tech

Hydraulic scheme	Valve description	Valve type	Rated flow (l/min)	Max. pressure (bar)	Installation	Main port size or cavity type	Page
	ESCB-025	Three ports	25	250-310	In line	G 1/4"	17.01.**010**
	ESCB-050	Three ports	50	250-310	In line	G 3/8"	17.01.**020**
	ESCB-090	Three ports	90	250-310	In line	G 1/2"	17.01.**030**
	ELFB-025	Six ports single	25	250-310	In line	G 1/4"	17.02.**040**
	ESFB-025	Six ports single and bankable	25	250-310	In line/Flanged	G 1/4"	17.03.**050**
	ESFB-050	Six ports single and bankable	50	250-350	In line/Flanged	G 3/8"	17.03.**060**
	ESFB-100	Six ports single and bankable	90	250-350	In line/Flanged	G 1/2"	17.03.**070**
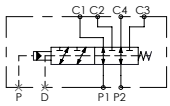	ELFB-400	Six ports single	400	210-420	In line	G 3/4" - 1" SAE 6000	17.04.**080**
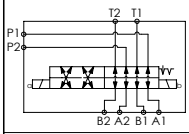	ELHB-010	Eight ports, with detent	10	210	In line	G 1/4"	17.05.**090**

FLOW DIVERTERS

ESCB-025

3 WAYS FLOW DIVERTERS

ATLANTIC Fluid Tech

**	Circuit	Transit position
40	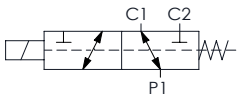	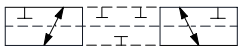
41	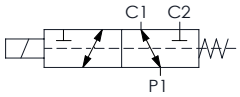	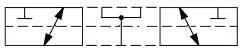
42	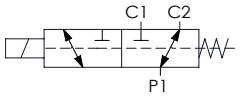	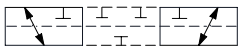
43	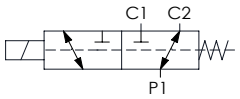	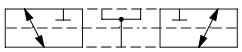

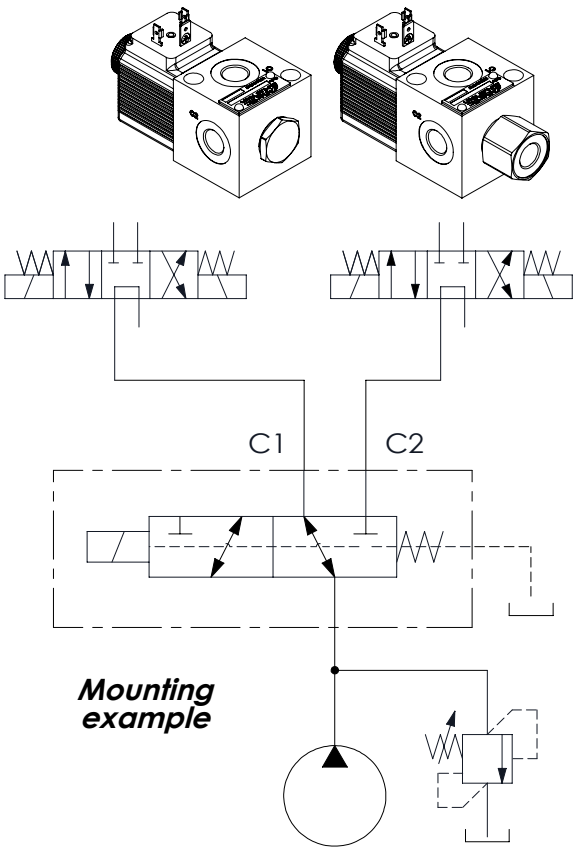

Mounting example

Technical data			
Rated flow		*l/min*	***25***
Operating pressure	*with internal drain "N"*	*bar*	***250***
	with external drain "E"	*bar*	***310***
Valve weight		*Kg*	***0,80***

OVERALL DIMENSIONS

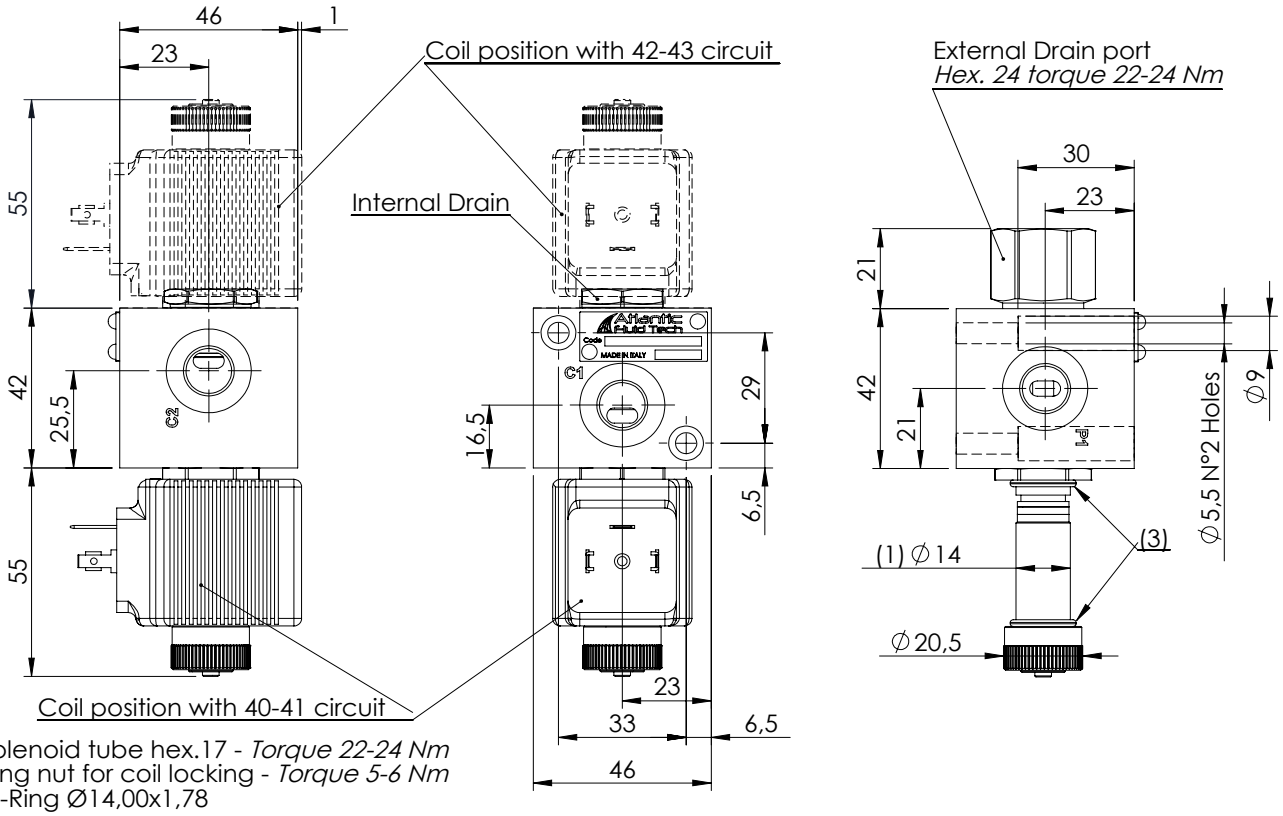

(1) Solenoid tube hex.17 - *Torque 22-24 Nm*
(2) Ring nut for coil locking - *Torque 5-6 Nm*
(3) O-Ring Ø14,00x1,78

Characteristic curves

Measured with hydraulic fluid ISO-VG46 at 40° ± 5°C

ATLANTIC Fluid Tech

Maximum perfomance

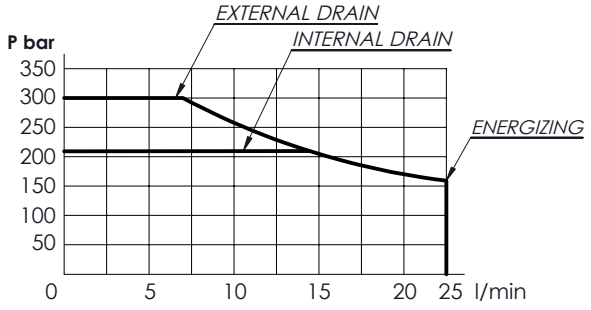

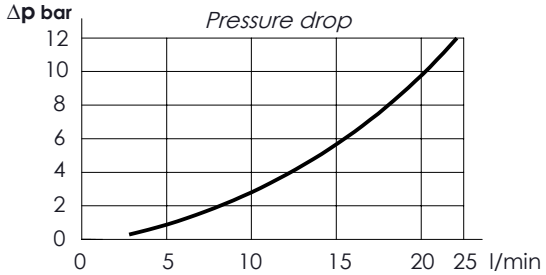

*Internal leakage on C ports : MAX **15** cm3/min - Mineral oil with 32 cStviscosity, at 40° C and 100 bar pressure*

*	OPERATED	Circuit
E	*Electric* 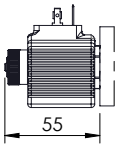	
N	*Hydraulic/pneumatic* 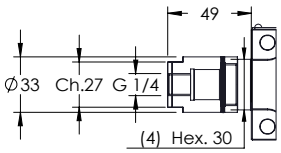	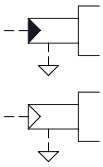

(4) Hydraulic or pneumatic pilot connector: hex 30 mm - Torque 20-22 Nm

*With external drain Pilot Pressure Min. **5** bar*

*With internal drain Pilot Pressure is **1/10** of the working pressure*

*	MANUAL OVERRIDE
S	*Standard* 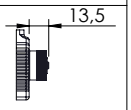
V	*Screw* 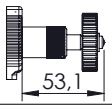
N	*Without manual override*

*	DRAIN	Circuit
N	*Internal*	
E	*External*	

PORTS		
* * *	Main (C)	Drain (D)
G14	1/4" Gas	1/4" Gas
Other port sizes available		

CIRCUIT

N - *Seals in NBR*
V - *Seals in VITON*

ESCB - 025 - * * A * - ** - * - * ** ***

*	Voltage (V)	Resistance (Ω) ± 7%	Power (W)	Current (A)
-	*Without coil*			
A	12 DC	5,53	26	2,17
B	24 DC	22,1	26	1,08
Other voltages available on request				

*	COIL	Type	Protection class
-	*Without coil*		
HR	DIN 43650 - ISO 4400 Class H	M14	IP65
AJ	AMP JUNIOR Class H	M14	IP65
DT	DEUTSCH DT04-2P-L Class H	M14	IP69

FLOW DIVERTERS

ESCB-050

3 WAYS FLOW DIVERTERS

ATLANTIC Fluid Tech

**	Circuit	Transit position
40	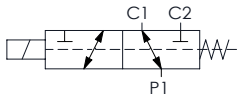	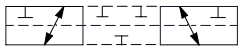
41	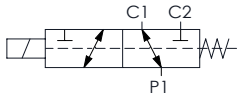	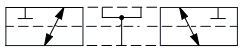
42	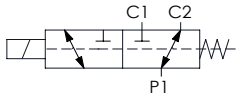	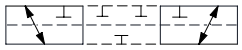
43	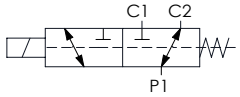	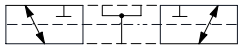

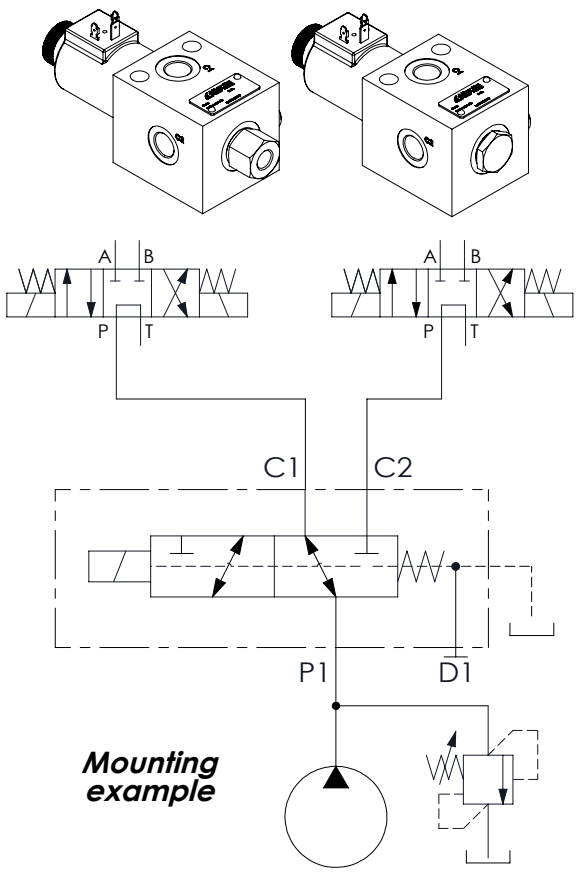

Mounting example

Technical data			
Rated flow		*l/min*	***50***
Operating pressure	*with internal drain "N"*	*bar*	***250***
	with external drain "E"	*bar*	***310***
Valve weight		*Kg*	***2,6***

OVERALL DIMENSIONS

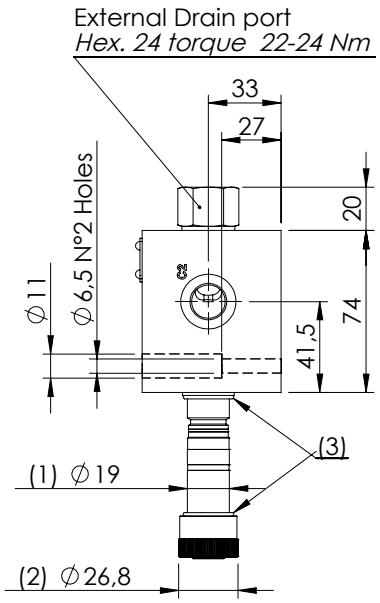

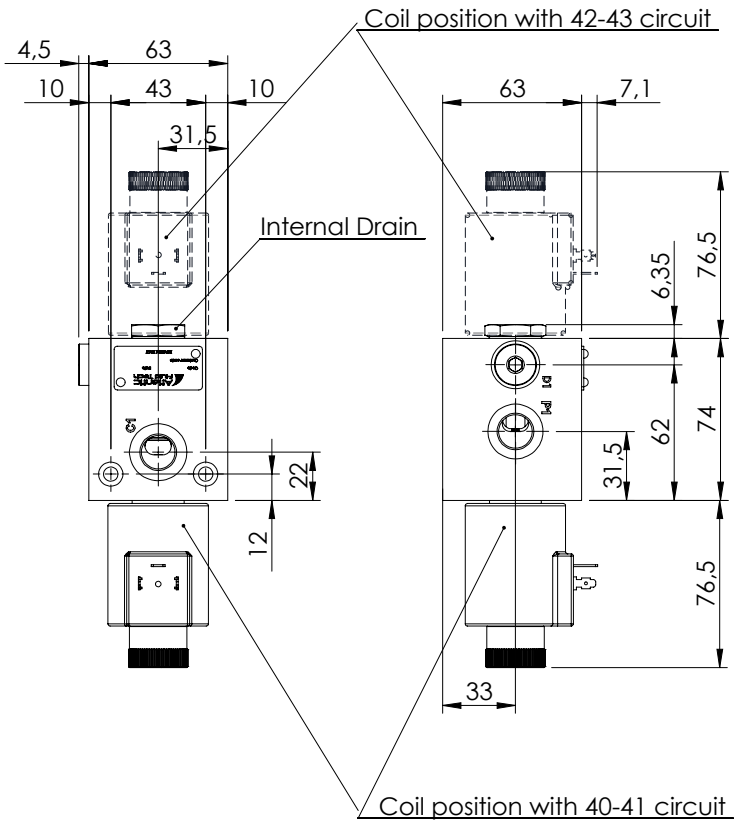

(1) Solenoid tube hex.17 - *Torque 22-24 Nm*
(2) Ring nut for coil locking - *Torque 5-6 Nm*
(3) O-Ring Ø18,77 x1,78

Characteristic curves

Measured with hydraulic fluid ISO-VG46 at 40° ± 5°C

ATLANTIC Fluid Tech

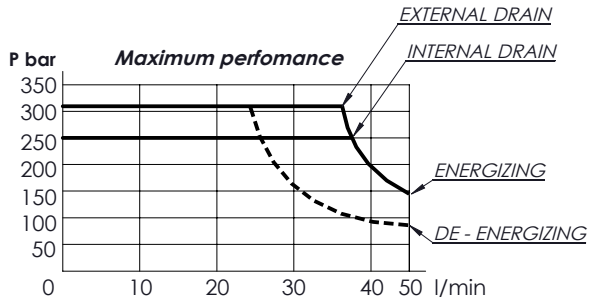

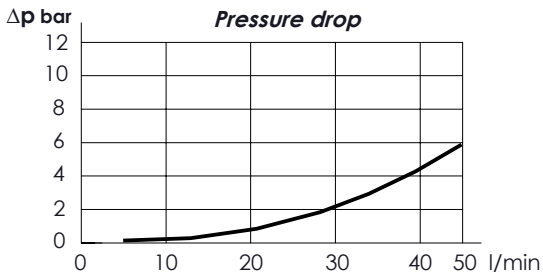

*Internal leakage on C ports : MAX **25** cm3/min - Mineral oil with 32 cSt viscosity, at 40° C and 100 bar pressure*

*	OPERATED	Circuit
E	*Electric* (76,5)	
N	*Hydraulic/pneumatic* (49; Ø33 Ch.27 G 1/4; (4) Hex. 30)	

(4) Hydraulic or pneumatic pilot connector: hex 30 mm - Torque 20-22 Nm

*With external drain Pilot Pressure Min. **5** bar*

*With internal drain Pilot Pressure is **1/10** of the working pressure*

*	MANUAL OVERRIDE
S	*Standard* (19)
V	*Screw* (63,6)
N	*Without manual override*

*	DRAIN	Circuit
N	*Internal*	
E	*External*	

PORTS		
* * *	Main (C)	Drain (D)
G38	3/8" Gas	1/4" Gas
Other port sizes available		

CIRCUIT

N - *Seals in NBR*
V - *Seals in VITON*

ESCB - 050 - * * C * - ** - * - * ** ***

*	Voltage (V)	Resistance (Ω) ± 7%	Power (W)	Current (A)
-	*Without coil*			
A	12 DC	4,36	33	2,75
B	24 DC	17,45	33	1,37
Other voltages available on request				

*	COIL	Type	Protection class
-	*Without coil*		
HR	DIN 43650 - ISO 4400 Class H	M8	IP65
AJ	AMP JUNIOR Class H	M8	IP65
DT	DEUTSCH DT04-2P-L Class H	M8	IP69

FLOW DIVERTERS

ESCB-090

3 WAYS FLOW DIVERTERS

ATLANTIC Fluid Tech

**	Circuit	Transit position
40	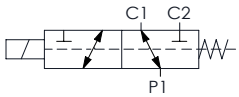	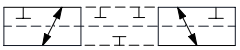
41	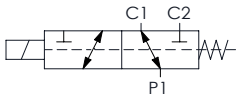	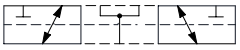
42	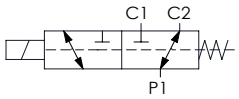	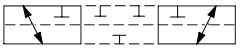
43	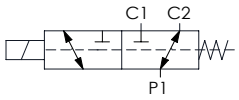	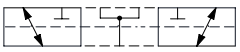

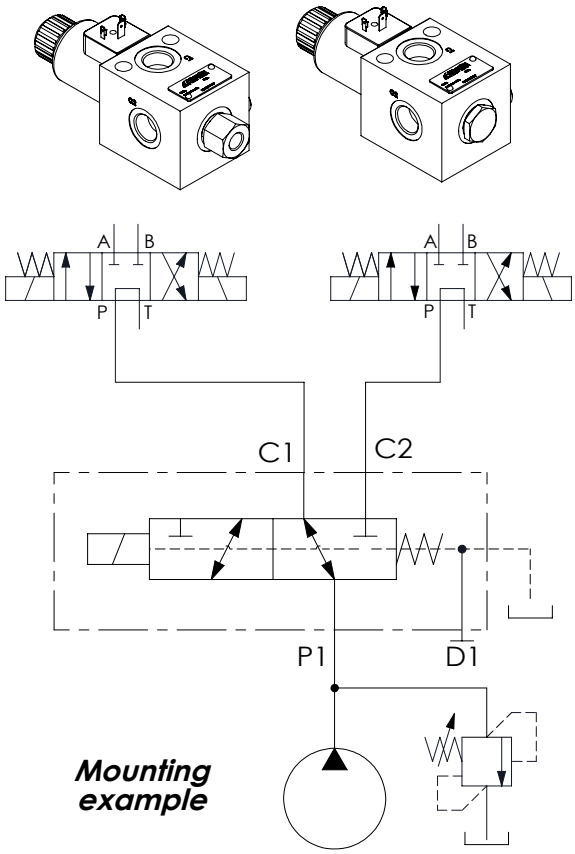

Mounting example

Technical data			
Rated flow		*l/min*	***90***
Operating pressure	*with internal drain "N"*	*bar*	***250***
	with external drain "E"	*bar*	***310***
Valve weight		*Kg*	***2,4***

OVERALL DIMENSIONS

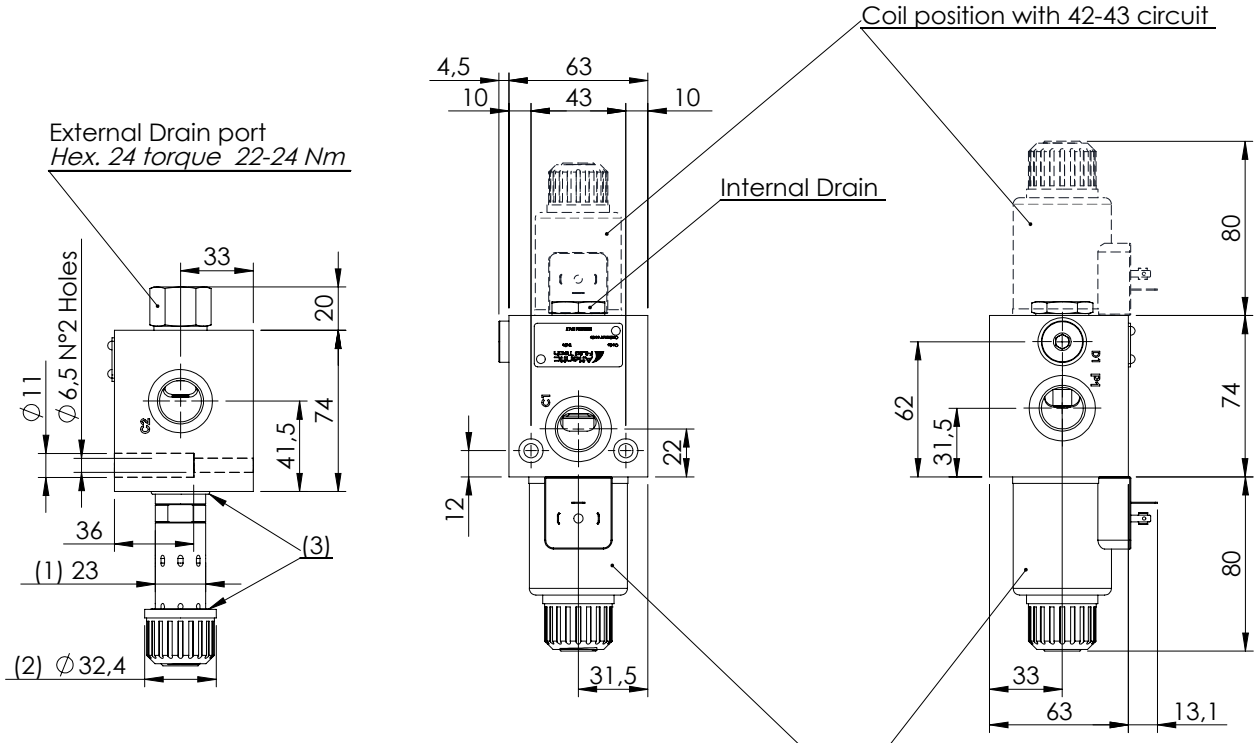

(1) Solenoid tube hex.20 - *Torque 18-22 Nm*
(2) Ring nut for coil locking - *Torque 7-8 Nm*
(3) O-Ring Ø 21,95 x 1,78 - 22,22 x 2,62 (smaller one near manifold)

Characteristic curves

Measured with hydraulic fluid ISO-VG46 at 40° ± 5°C

ATLANTIC Fluid Tech

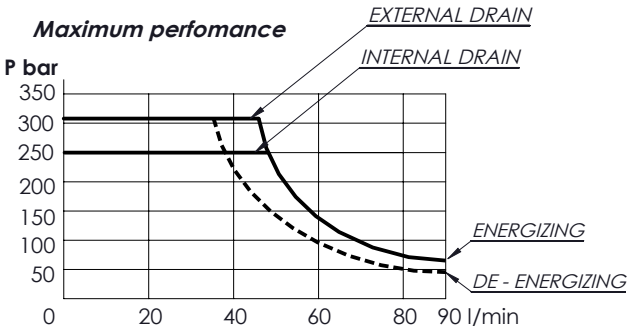

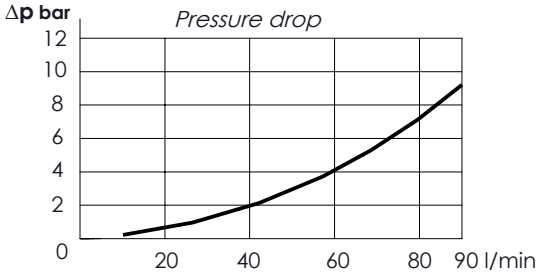

*Internal leakage on C ports : MAX **25** cm3/min - Mineral oil with 32 cSt viscosity, at 40° C and 100 bar pressure*

*	OPERATED	Circuit
E	*Electric* 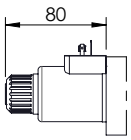	
N	*Hydraulic/pneumatic* 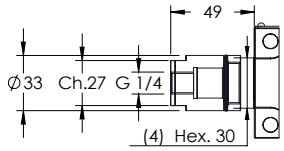	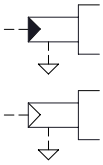

(4) Hydraulic or pneumatic pilot connector: hex 30 mm - Torque 20-22 Nm

*With external drain Pilot Pressure Min. **5** bar*

*With internal drain Pilot Pressure is **1/10** of the working pressure*

*	MANUAL OVERRIDE
S	*Standard* 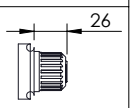
V	*Screw* 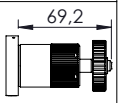
N	*Without manual override*

*	DRAIN	Circuit
N	*Internal*	
E	*External*	

PORTS		
* * *	Main (C)	Drain (D)
G12	1/2" Gas	1/4" Gas
Other port sizes available		

CIRCUIT

N - *Seals in NBR*
V - *Seals in VITON*

ESCB - 090 - * * E * - ** - * - * ** ***

*	Voltage (V)	Resistance (Ω) ± 7%	Power (W)	Current (A)
-	*Without coil*			
A	12 DC	3,27	44	3,67
B	24 DC	13,09	44	1,83
Other voltages available on request				

*	COIL	Type	Protection class
-	*Without coil*		
HR	DIN 43650 - ISO 4400 Class H	M11	IP65
AJ	AMP JUNIOR Class H	M11	IP65
DT	DEUTSCH DT04-2P-L Class H	M11	IP69

FLOW DIVERTERS

ELFB-025

6 WAYS SINGLE IN LINE FLOW DIVERTERS

ATLANTIC Fluid Tech

**	Circuit	Transit position
01	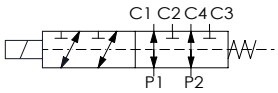	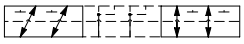
02	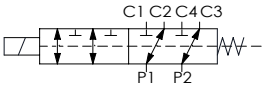	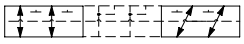
03	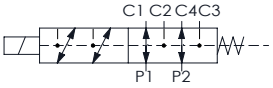 *Only external drain	

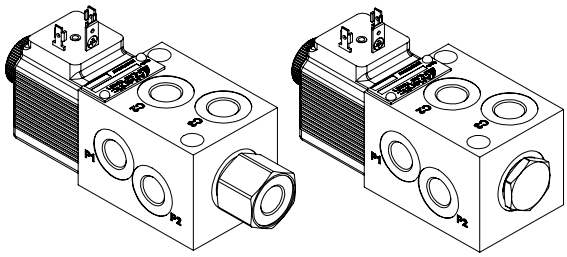

Mounting example

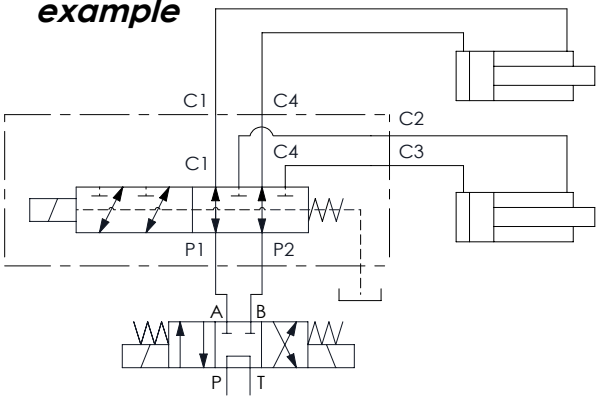

Technical data			
Rated flow		*l/min*	***25***
Operating pressure	*with internal drain "N"*	*bar*	***250***
	with external drain "E"	*bar*	***310***
Valve weight		*Kg*	***1,1***

OVERALL DIMENSIONS

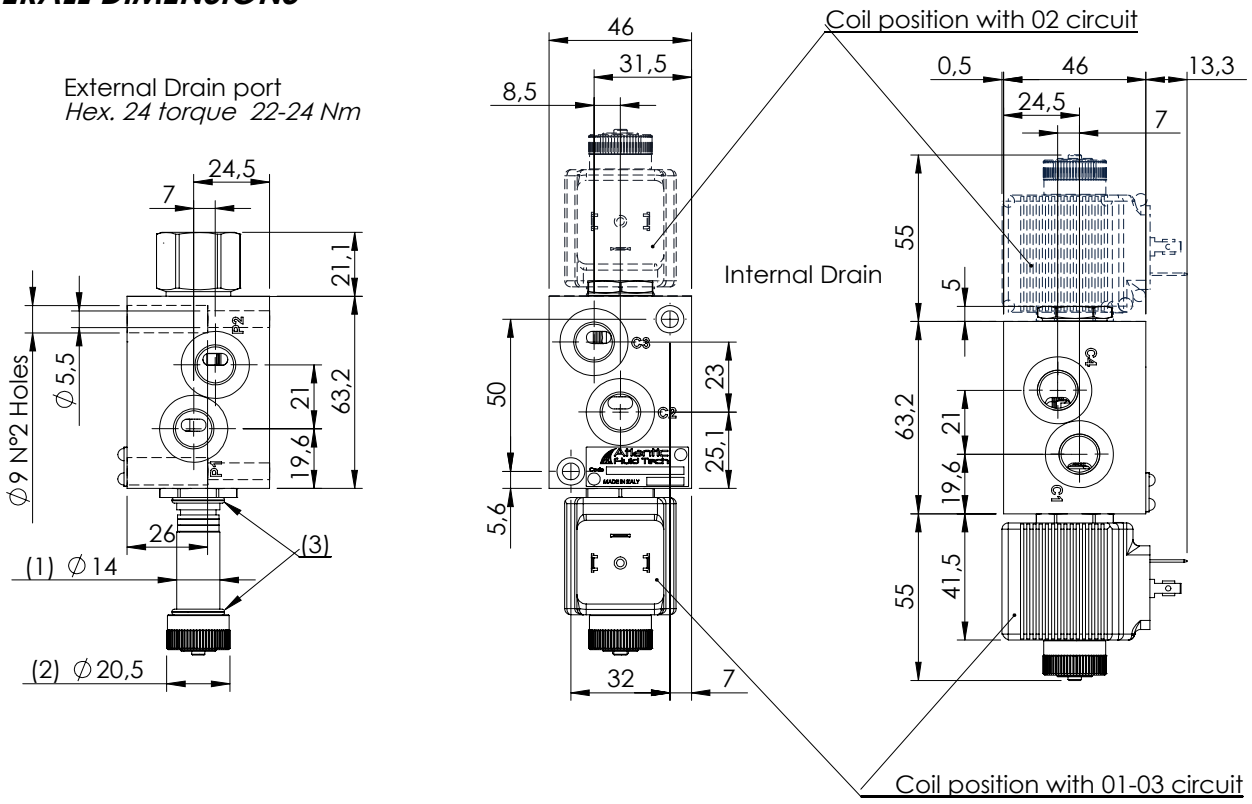

(1) Solenoid tube hex.17 - *Torque 22-24 Nm*
(2) Ring nut for coil locking - *Torque 5-6 Nm*
(3) O-Ring Ø 14,00 x 1,78

Characteristic curves

Measured with hydraulic fluid ISO-VG46 at 40° ± 5°C

ATLANTIC Fluid Tech

Maximum performance

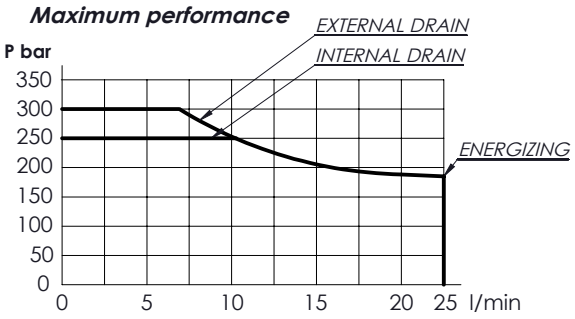

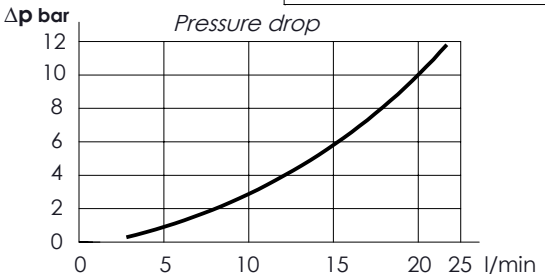

*Internal leakage on C ports : MAX **15** cm3/min Mineral oil with 32 cSt viscosity, at 40° C and 100 bar pressure*

✱	OPERATED	Circuit
E	*Electric* 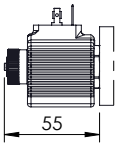	
N	*Hydraulic/pneumatic* 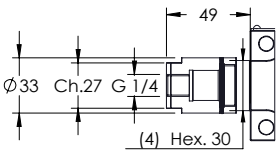	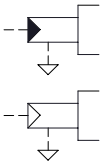

(4) Hydraulic or pneumatic pilot connector: hex 30 mm - Torque 20-22 Nm

*With external drain Pilot Pressure Min. **5** bar*

*With internal drain Pilot Pressure is **1/10** of the working pressure*

✱	MANUAL OVERRIDE
S	*Standard* 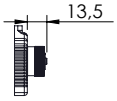
V	*Screw* 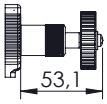
N	*Without manual override*

✱	DRAIN	Circuit
N	*Internal*	
E	*External*	

PORTS		
* * *	Main (C)	Drain (D)
G14	1/4" Gas	1/4" Gas
Other port sizes available		

N - *Seals in NBR*
V - *Seals in VITON*

CIRCUIT

ELFB - 025 - ✱ ✱ A ✱ - ✱✱ - ✱✱✱ - ✱ ✱✱ ✱

✱	Voltage (V)	*Resistance (Ω) ± 7%*	*Power (W)*	*Current (A)*
-	*Without coil*			
A	12 DC	5,53	26	2,17
B	24 DC	22,1	26	1,08
Other voltages available on request				

✱	*COIL*		*Type*	*Protection class*
-	*Without coil*			
HR		DIN 43650 - ISO 4400 Class H	M14	IP65
AJ		AMP JUNIOR Class H	M14	IP65
DT		DEUTSCH DT04-2P-L Class H	M14	IP69

FLOW DIVERTERS

ESFB-025

6 WAYS SINGLE & BANKABLE FLOW DIVERTERS

ATLANTIC Fluid Tech

**	Circuit	Transit position
01	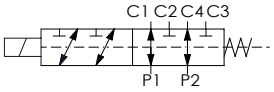	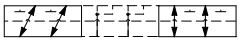
02	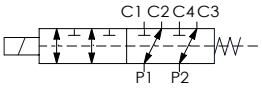	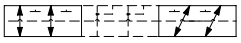
03	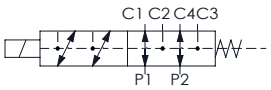 *Only external drain	

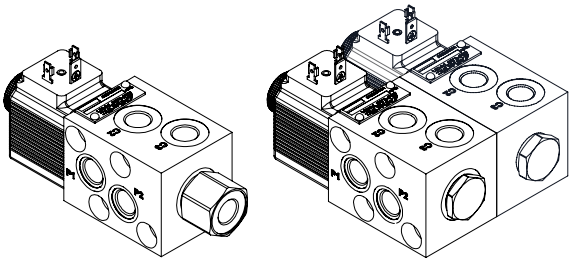

Technical data

Rated flow		*l/min*	***25***
Operating pressure	*with internal drain "N"*	*bar*	***250***
	with external drain "E"	*bar*	***310***
Valve weight		*Kg*	***1***

Mounting example

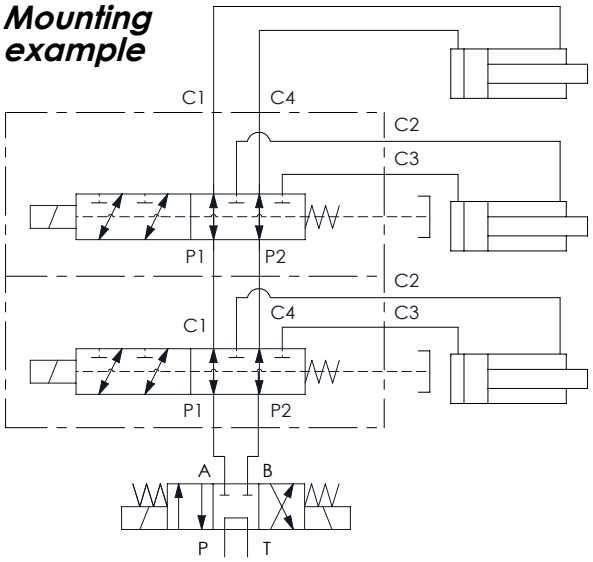

OVERALL DIMENSIONS

External Drain port
Hex. 24 torque 22-24 Nm

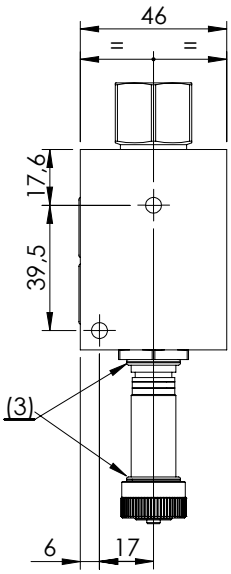

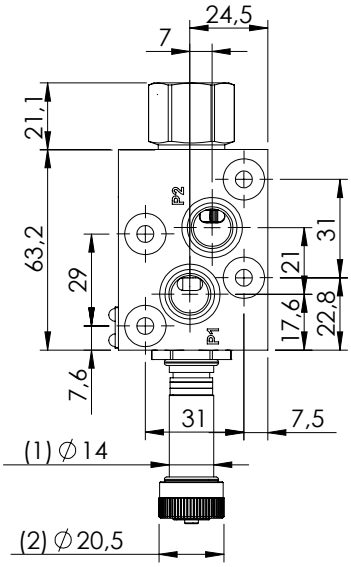

Coil position with 02 circuit

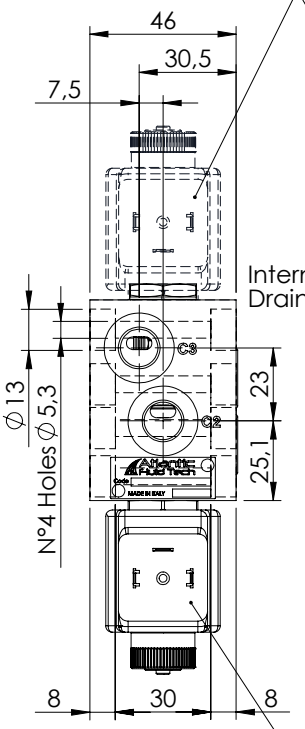

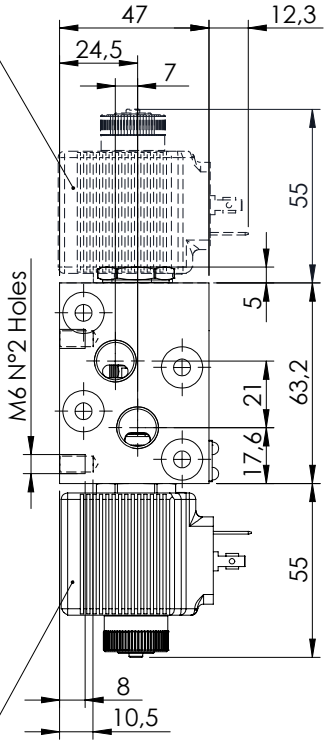

Coil position with 01-03 circuit

(1) Solenoid tube hex.17 - *Torque 22-24 Nm*
(2) Ring nut for coil locking - *Torque 5-6 Nm*
(3) O-Ring Ø 14,00 x 1,78

Characteristic curves

Measured with hydraulic fluid ISO-VG46 at 40° ± 5°C

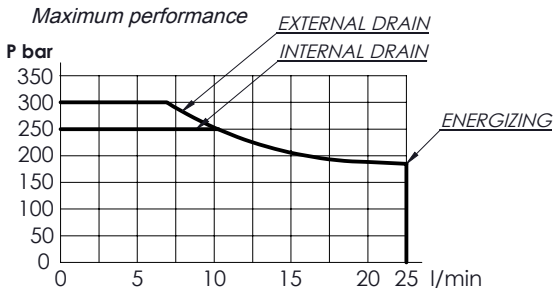

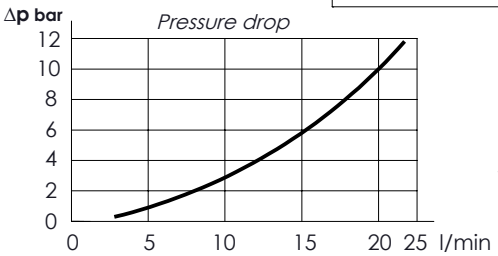

*Internal leakage on C ports : MAX **15** cm3/min Mineral oil with 32 cSt viscosity, at 40° C and 100 bar pressure*

*	OPERATED	Circuit
E	*Electric* (55)	
N	*Hydraulic/pneumatic* (49; Ø33 Ch.27 G 1/4; (4) Hex. 30)	

(4) Hydraulic or pneumatic pilot connector: hex 30 mm - Torque 20-22 Nm

*With external drain Pilot Pressure Min. **5** bar*

*With internal drain Pilot Pressure is **1/10** of the working pressure*

*	MANUAL OVERRIDE
S	*Standard* (13,5)
V	*Screw* (53,1)
N	*Without manual override*

*	DRAIN	Circuit
N	*Internal*	
E	*External*	

PORTS		
* * *	Main (C)	Drain (D)
G14	1/4" Gas	1/4" Gas
Other port sizes available		

N - *Seals in NBR*
V - *Seals in VITON*

CIRCUIT

ESFB - 025 - * * A * - ** - * - * ** * ****

*	Voltage (V)	Resistance (Ω) ± 7%	Power (W)	Current (A)
-	*Without coil*			
A	12 DC	5,53	26	2,16
B	24 DC	22,1	26	1,08
Other voltages available on request				

*	COIL	Type	Protection class
-	*Without coil*		
HR	DIN 43650 - ISO 4400 Class H	M14	IP65
AJ	AMP JUNIOR Class H	M14	IP65
DT	DEUTSCH DT04-2P-L Class H	M14	IP69

TYPE OF MOUNTING

*	Port number	Screw Tie rods	Installation torque
-	6	-	-
08	8	M5x92	5-6 Nm
10	10	M5x138	5-6 Nm
12	12	M5x184	5-6 Nm
14	14	-	-

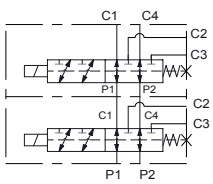

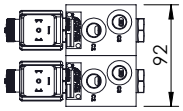

8 ports

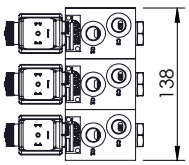

10 ports

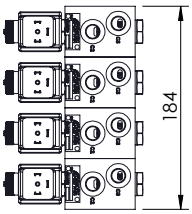

12 ports

ESFB-050

6 WAYS SINGLE & BANKABLE FLOW DIVERTERS

ATLANTIC Fluid Tech

**	Circuit	Transit position
01	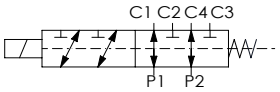	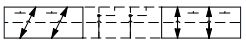
02	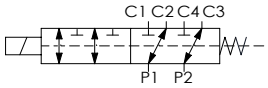	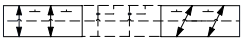
03	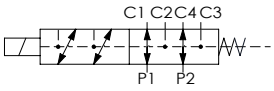 *Only external drain	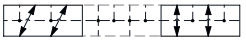

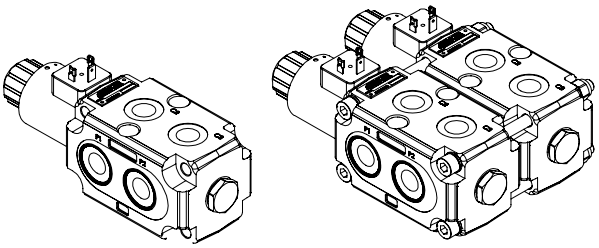

Mounting example

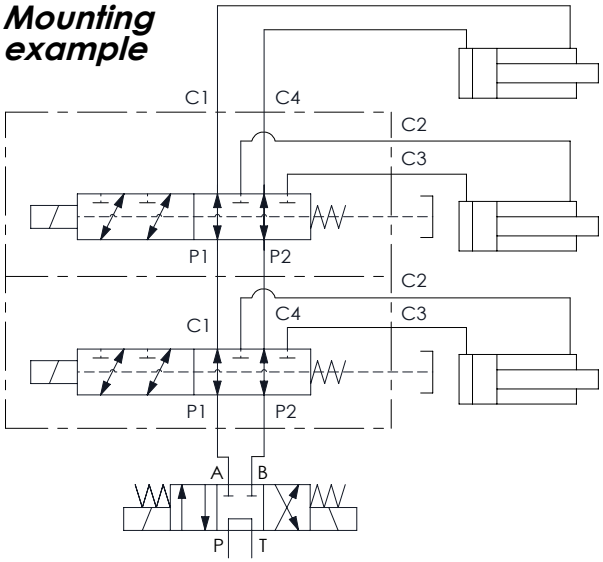

Technical data			
Rated flow		l/min	**50**
Operating pressure	with internal drain "N"	bar	**250**
	with external drain "E"	bar	**350**
	on port D	bar	**210**
Valve weight		Kg	**3,8**

OVERALL DIMENSIONS

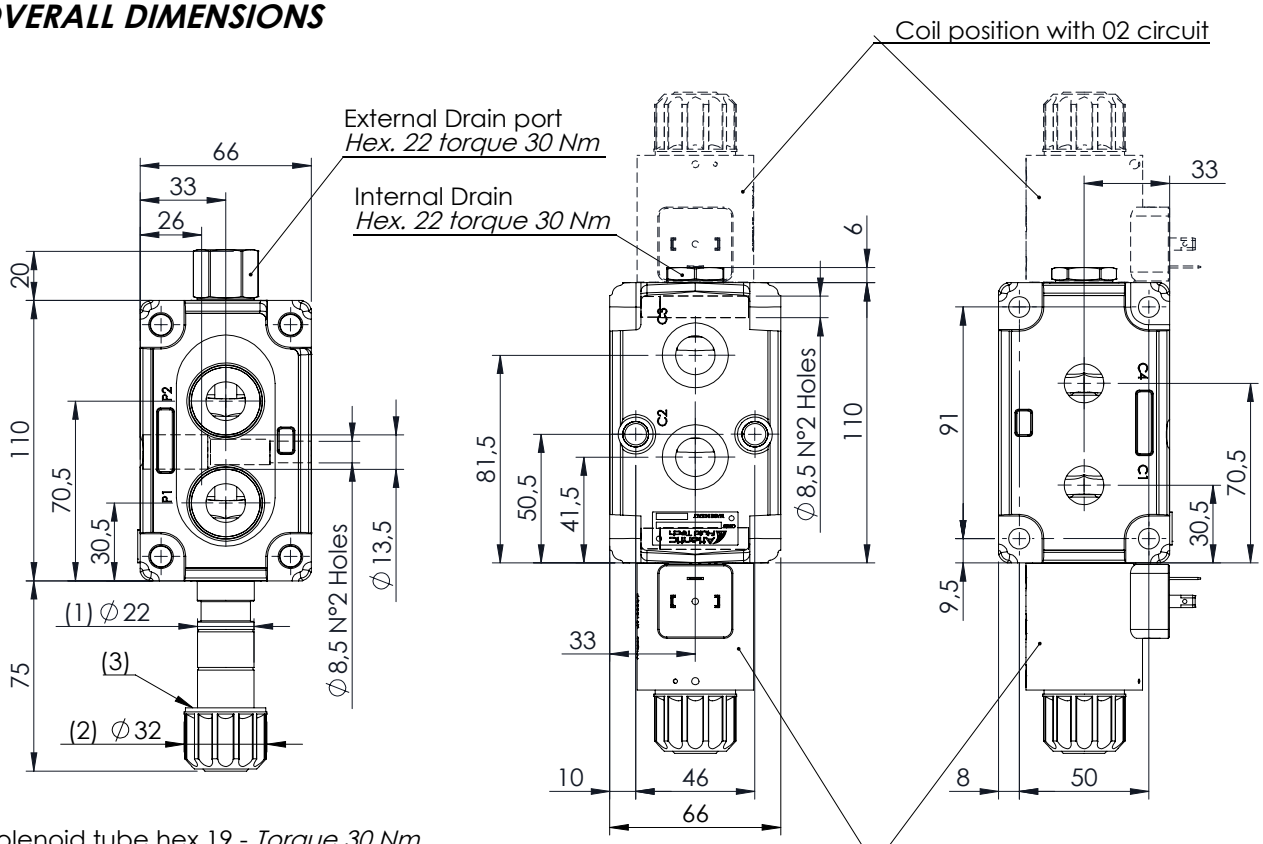

(1) Solenoid tube hex.19 - *Torque 30 Nm*
(2) Ring nut for coil locking - *Torque 5-6 Nm*
(3) O-Ring Ø 21,5 x 2

Characteristic curves

Measured with hydraulic fluid ISO-VG46 at 40° ± 5°C

ATLANTIC Fluid Tech

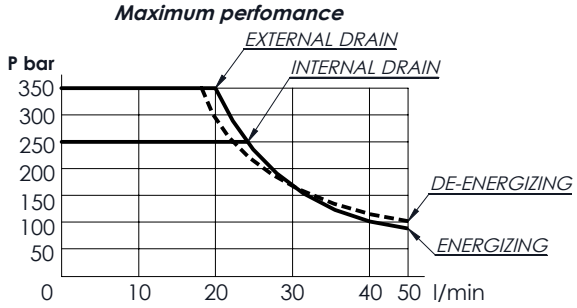

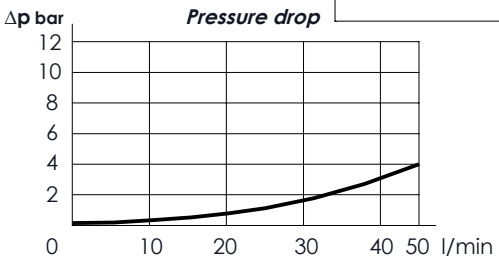

*Internal leakage on C ports : MAX **25** cm3/min Mineral oil with 32 cSt viscosity, at 40° C and 100 bar pressure*

*	OPERATED	Circuit
E	*Electric* 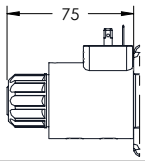	
N	*Hydraulic/pneumatic* 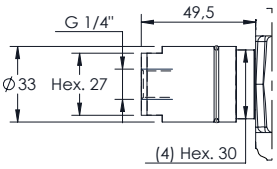	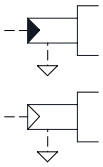

(4) Hydraulic or pneumatic pilot connector: hex 30 mm - Torque 20-22 Nm

*With external drain Pilot Pressure Min. **5** bar*

*With internal drain Pilot Pressure is **1/10** of the working pressure*

*	MANUAL OVERRIDE
S	*Standard* 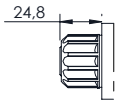
V	*Screw* 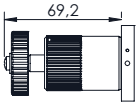
N	*Without manual override*

*	DRAIN	Circuit
N	*Internal*	
E	*External*	

* * *	Main (C)	Drain (D)
PORTS		
G38	3/8" Gas	1/4" Gas
J38	3/8" JIS	1/4" JIS
S08	3/4-16 UNF	7/16-20 UNF
Other port sizes available		

N - *Seals in NBR*
V - *Seals in VITON*

CIRCUIT

ESFB - 050 - * * D * - ** - *** - * ** * **

*	Voltage (V)	Resistance (Ω) ± 7%	Power (W)	Current (A)
-	*Without coil*			
A	12 DC	4,41	32,7	2,72
B	24 DC	18,6	31	1,29
Other voltages available on request				

*	COIL	Type	Protection class
-	*Without coil*		
HR	DIN 43650 - ISO 4400 Class H	M12	IP65
AJ	AMP JUNIOR Class H	M12	IP65
DT	DEUTSCH DT04-2P-L Class H	M12	IP69

TYPE OF MOUNTING

*	Port number	Screw Tie rods	Installation torque
-	6	-	-
08	8	M8x125	15-17 Nm
10	10	M8x190	15-17 Nm
12	12	M8x255	15-17 Nm
14	14	M8x320	15-17 Nm

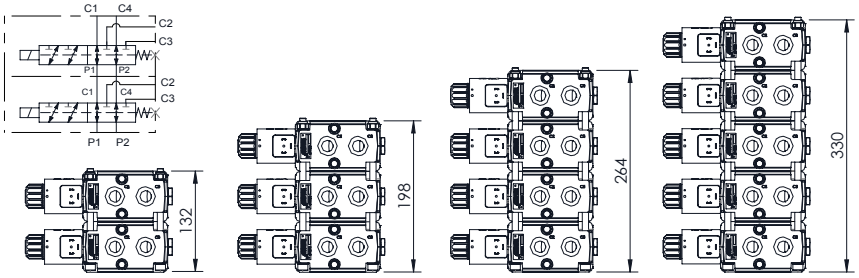

8 ports 10 ports 12 ports 14 ports

FLOW DIVERTERS

ESFB-100

6 WAYS SINGLE & BANKABLE FLOW DIVERTERS

ATLANTIC Fluid Tech

**	Circuit	Transit position
01	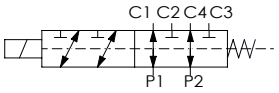	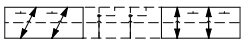
02	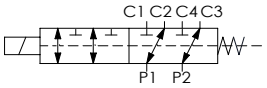	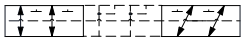
03	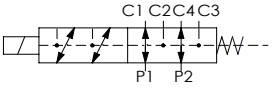 *Only external drain	

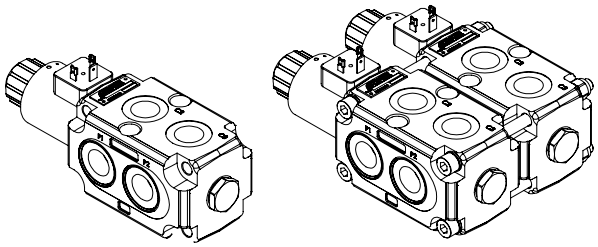

Mounting example

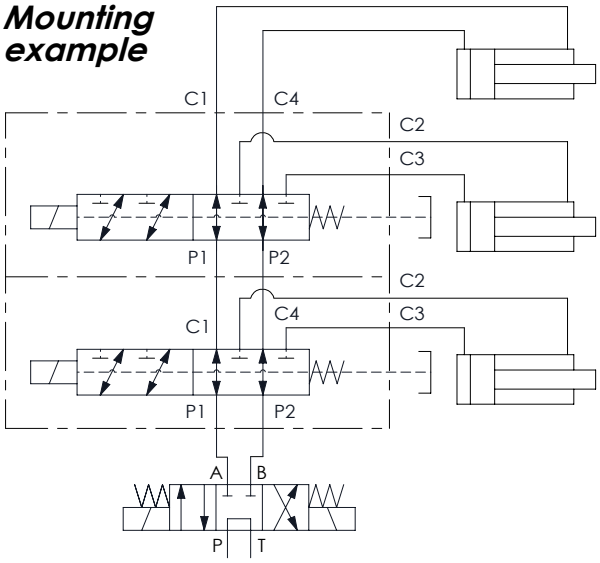

Technical data			
Rated flow		*l/min*	***100***
Operating pressure	*with internal drain "N"*	*bar*	***250***
	with external drain "E"	*bar*	***350***
	on port D	*bar*	***210***
Valve weight		*Kg*	***3,8***

OVERALL DIMENSIONS

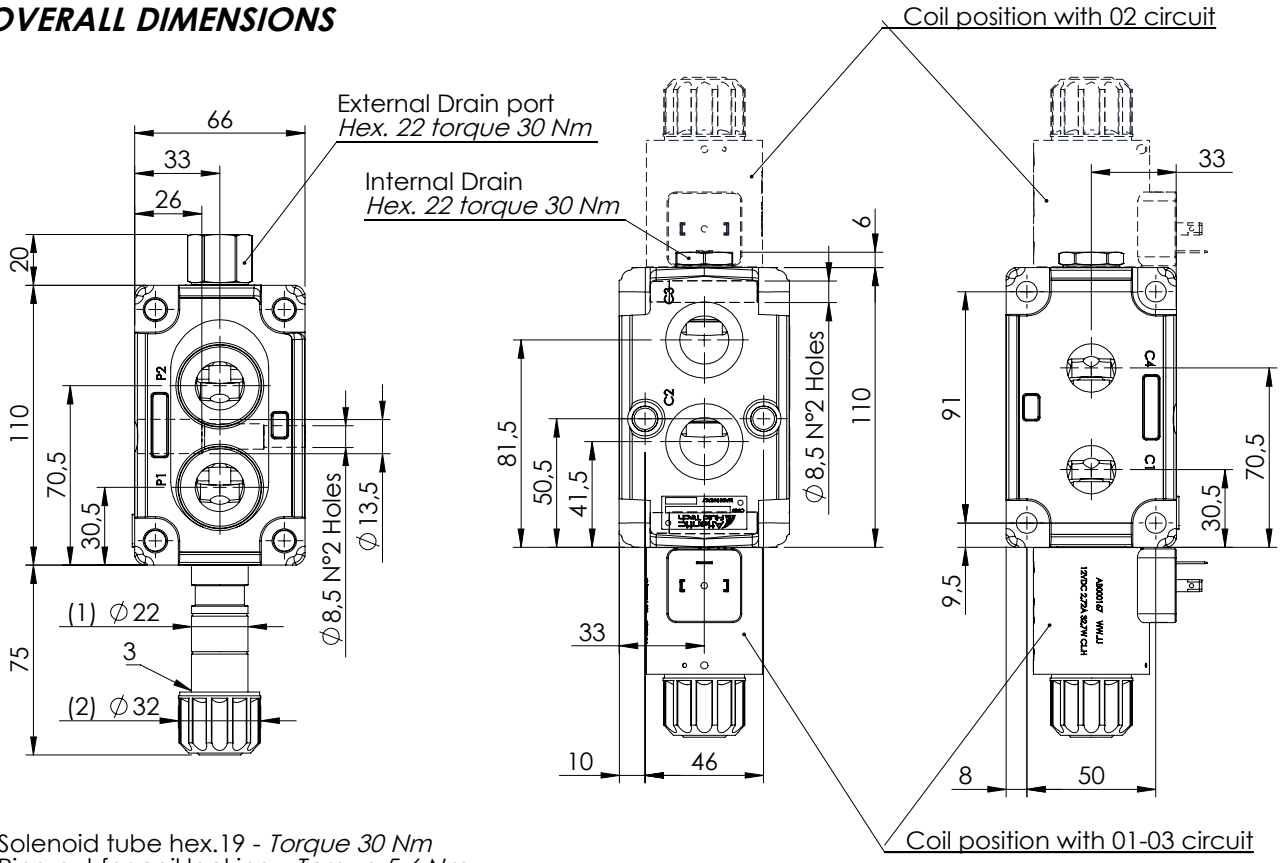

(1) Solenoid tube hex.19 - *Torque 30 Nm*
(2) Ring nut for coil locking - *Torque 5-6 Nm*
(3) O-Ring Ø 21,5 x 2

Characteristic curves

Measured with hydraulic fluid ISO-VG46 at 40° ± 5°C

ATLANTIC Fluid Tech

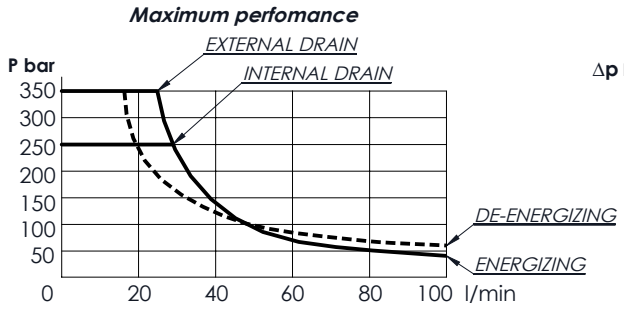

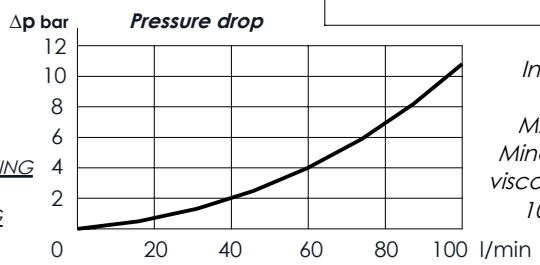

*Internal leakage on C ports : MAX **25** cm3/min Mineral oil with 32 cSt viscosity, at 40° C and 100 bar pressure*

*	OPERATED	Circuit
E	*Electric* 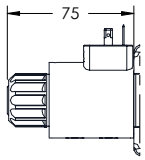	
N	*Hydraulic/pneumatic* 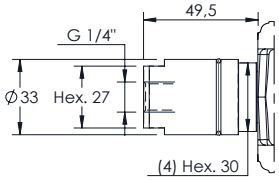	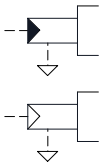

(4) Hydraulic or pneumatic pilot connector: hex 30 mm - Torque 20-22 Nm

*With external drain Pilot Pressure Min. **5** bar*

*With internal drain Pilot Pressure is **1/10** of the working pressure*

*	MANUAL OVERRIDE
S	*Standard* 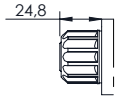
V	*Screw* 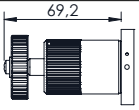
N	*Without manual override*

*	DRAIN	Circuit
N	*Internal*	
E	*External*	

PORTS		
* * *	Main (C)	Drain (D)
G12	1/2" Gas	1/4" Gas
J12	1/2" JIS	1/4" JIS
S10	7/8-14 UNF	7/16-20 UNF
Other port sizes available		

N - *Seals in NBR*
V - *Seals in VITON*

CIRCUIT

ESFB - 100 - * * D * - ** - * - * ** * ****

*	Voltage (V)	Resistance (Ω) ± 7%	Power (W)	Current (A)
-	*Without coil*			
A	12 DC	4,41	32,7	2,72
B	24 DC	18,6	31	1,29
Other voltages available on request				

*	COIL	Type	Protection class
-	*Without coil*		
HR	DIN 43650 - ISO 4400 Class H	M12	IP65
AJ	AMP JUNIOR Class H	M12	IP65
DT	DEUTSCH DT04-2P-L Class H	M12	IP69

TYPE OF MOUNTING

*	Port number	Screw Tie rods	Installation torque
-	6	-	-
08	8	M8x125	15-17 Nm
10	10	M8x190	15-17 Nm
12	12	M8x255	15-17 Nm
14	14	M8x320	15-17 Nm

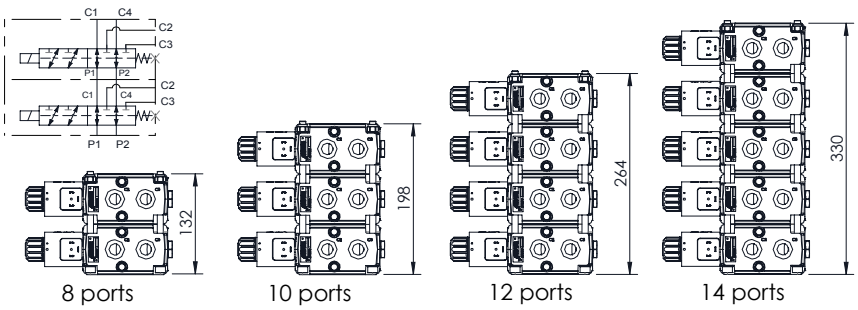

FLOW DIVERTERS

ELFB-400

6 WAYS SINGLE IN LINE FLOW DIVERTERS

ATLANTIC Fluid Tech

**	Circuit	Transit position
01	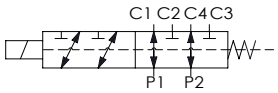	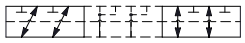

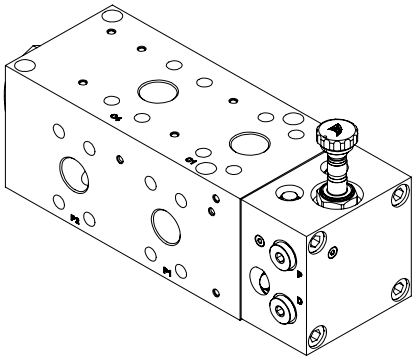

Technical data			
Rated flow		*l/min*	***400***
Operating pressure	*with internal drain "N"*	*bar*	***210***
	with external drain "E"	*bar*	***420***
Minimum pilot pressure		*bar*	***20***
Valve weight		*Kg*	***17,2***
Standard Ports		*1" SAE 6000*	

Mounting example

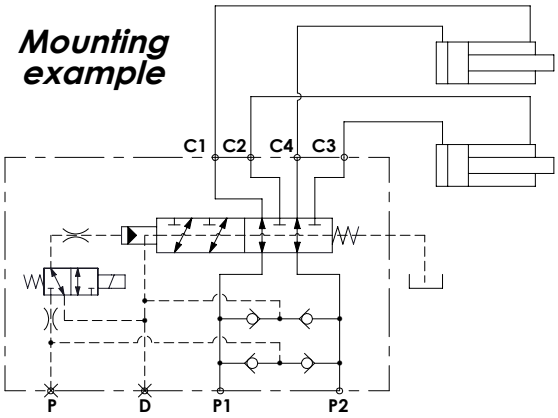

OVERALL DIMENSIONS

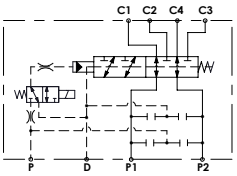

Configuration with external drain and electric pilot

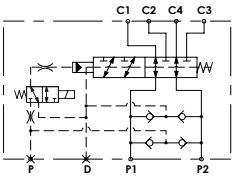

Configuration with internal drain and electric pilot

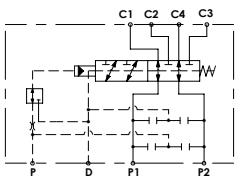

Configuration with external drain and hydraulic pilot

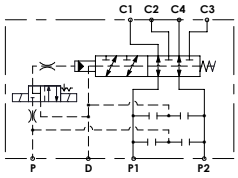

Configuration with external drain and electric pilot with detent

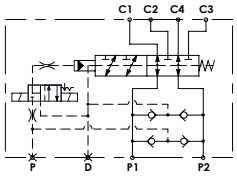

Configuration with internal drain and eletric pilot with detent

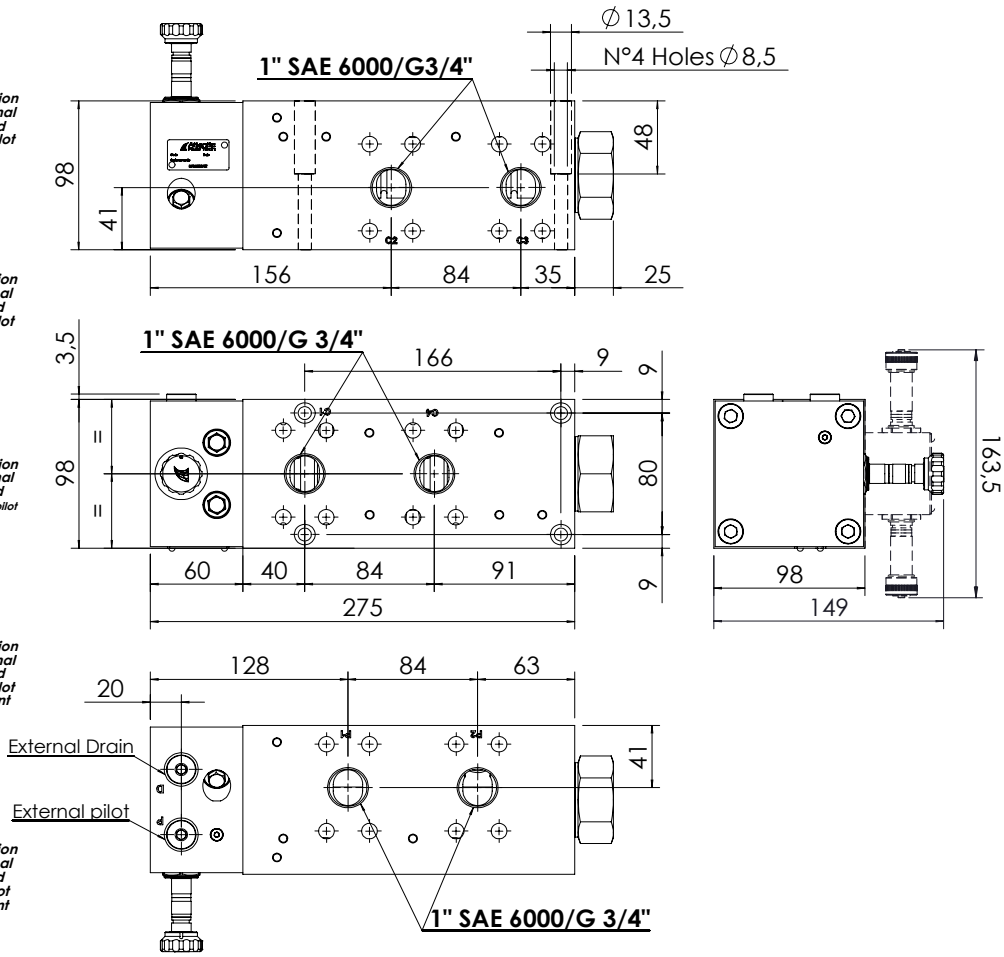

Characteristic curves

With pressure and flow in P1 or P2 and C4 and C1 without pressure

ATLANTIC Fluid Tech

Maximum perfomance

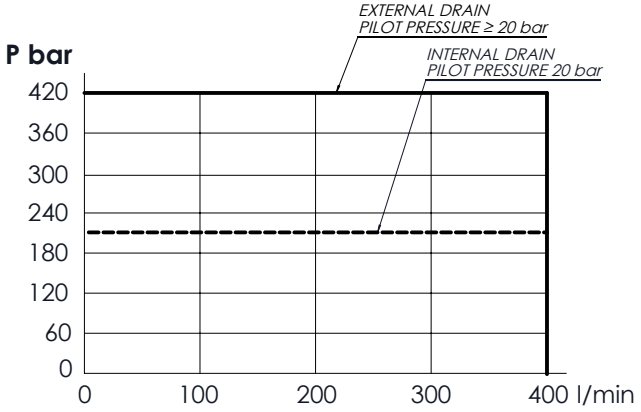

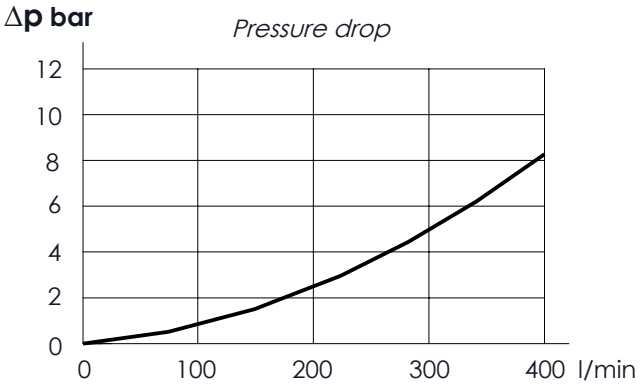

*	OPERATED	Circuit
H	*Hydraulic*	
E	*Electric* (51)	
D	*Electric with detent* (44)	a b

Max. pilot pressure with external drain: ***250*** *bar*

*	DRAIN	Circuit
N	*Internal*	
E	*External*	

*	COIL		Type	Protection class
-	*Without coil*			
HR		DIN 43650 - ISO 4400 Class H	M7	IP65
AJ		AMP JUNIOR Class H	M7	IP65
DT		DEUTSCH DT04-2P-L Class H	M7	IP69

PORTS		
* * *	Main (C)	Drain (D) Pilot (P)
S10 G34	1" SAE 6000 G3/4"	1/4" Gas
Special port sizes available		

CIRCUIT

V - *Seals in VITON*

ELFB - 400 - * S F * - 01 - * - * ** ***

*	Voltage (V)	Resistance (Ω) ± 7%	Power (W)	Current (A)
-	*Without coil*			
A	12 DC	7,2	20	1,67
B	24 DC	28,7	20	0,84
Special voltages available on request				

KIT	Type		Ordering code
HP	*Hydraulic pilot*		RG100032
EP	*Electrical pilot*		CE000824
ID	*Internal drain*		RG100033
ED	*External drain*		RG100034

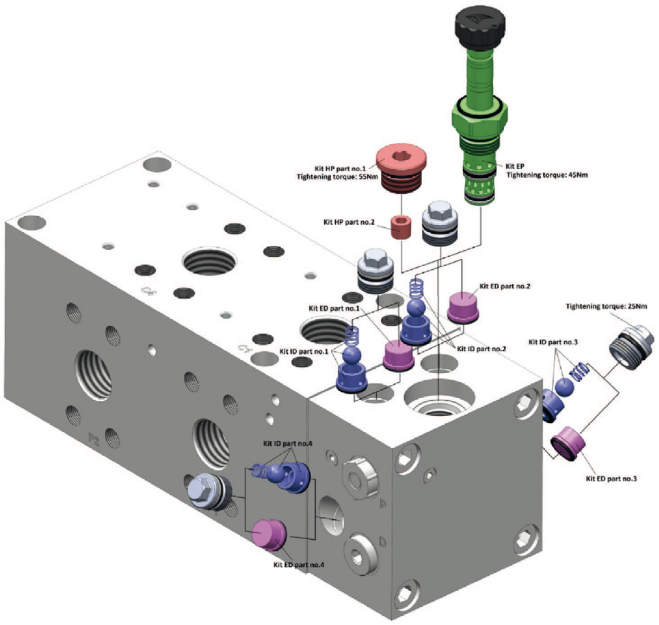

EXCAVATORS VALVE

ELHB-010-DSGN

8 WAYS WITH DETENT

ATLANTIC Fluid Tech

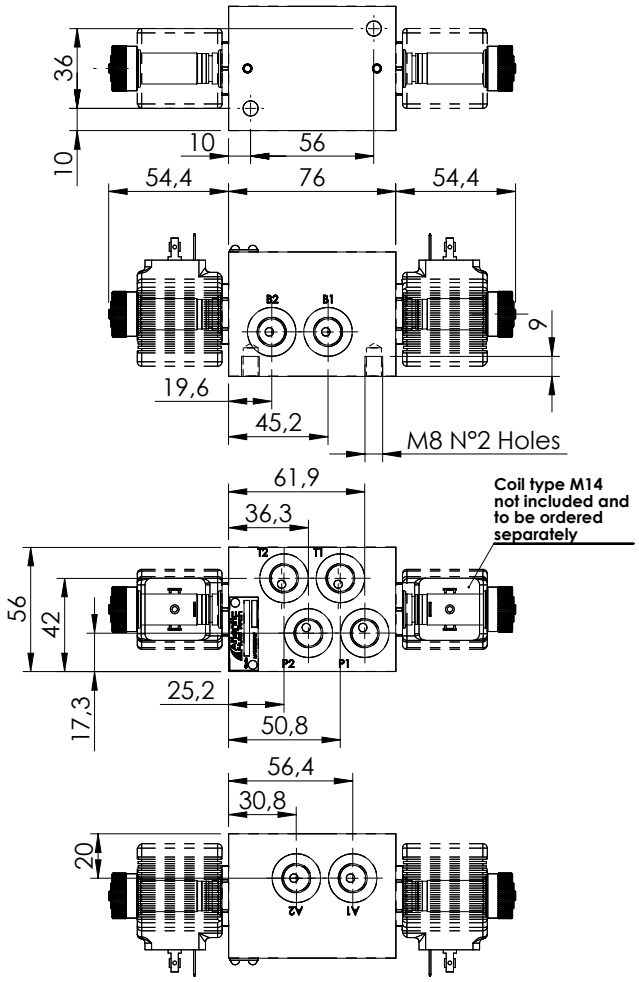

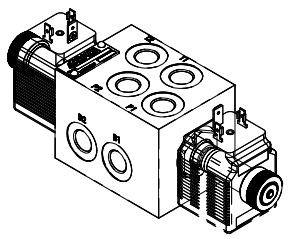

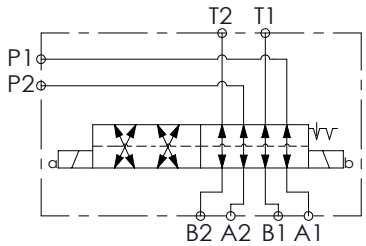

SPECIFICATIONS

Max. operating pressure:	**210 bar**
Rated flow:	**10 l/min**
Body:	**Cast Iron**
Weight:	**1,82 kg**
Coil type:	**M14 type**

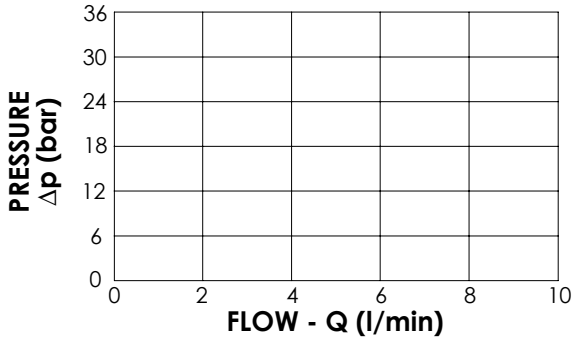

NOTES

See the chapter 18.00.000 for coil.

ORDERING CODES

Quick code	Description	Ports size	
ES000390	**ELHB-010-DSGN-39-G14-N**	**G 1/4"**	

ATLANTIC
Fluid Tech

SECTION 18

Modular Valves for Cetop

MANAGEMENT SYSTEM CERTIFICATION
DNV·GL
ISO 9001 = ISO 14001
OHSAS 18001

MODULAR VALVES FOR CETOP

ATLANTIC Fluid Tech

Hydraulic scheme	Valve description	Valve type	Rated flow (l/min)	Max. pressure (bar)	Installation	Main port size or cavity type	Page
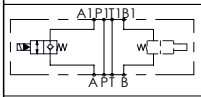	BNND-040-LE	Left version	40	210	Flanged	Cetop 3	18.01.**010**
	BNND-040-LE	Right version	40	210	Flanged	Cetop 3	18.01.**010**
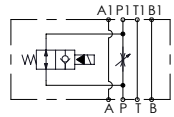	BNFN-040-NT	Pilot operated, cetop 3	40	210	Flanged	Cetop 3	18.02.**020**
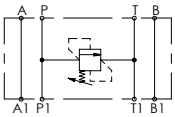	KPLN-030-DPNA	Direct acting, cetop 3	30	210	Flanged	Cetop 3	18.03.**030**
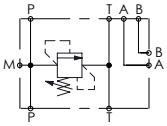	KPLN-030-DPNA	Direct acting, poppet type, subplate cetop 3	30	350	Flanged	Cetop 3	18.04.**040**
	KPLN-080-DPNA	Direct acting, poppet type, subplate cetop 5	80	350	Flanged	Cetop 5	18.04.**050**
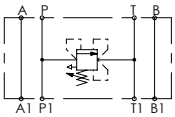	KPLT-030-DPNA	Direct acting, compensated	30	210	Flanged	Cetop 3	18.05.**060**
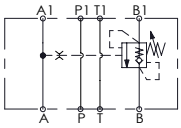	MBSN-060-ZTNR	Single acting, cetop 3	60	250	Flanged	Cetop 3	18.06.**070**
	MBSN-060-ATNR	Single acting, cetop 3	60	350	Flanged	Cetop 3	18.06.**080**
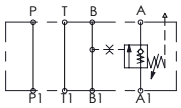	MBST-100-ZTNP	Single acting, cetop 5	100	250	Flanged	Cetop 5	18.07.**090**
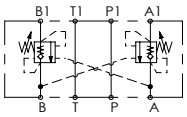	MBDN-030-LTNR	Double acting, cetop 3	30	210	Flanged	Cetop 3	18.08.**100**
	MBDN-060-ZTNR	Double acting, cetop 3	60	210	Flanged	Cetop 3	18.08.**110**
	MBDN-060-ATNR	Double acting, cetop 3	60	350	Flanged	Cetop 3	18.08.**120**
	MBDN-100-ZTNR	Double acting, cetop 5	100	350	Flanged	Cetop 5	18.08.**130**
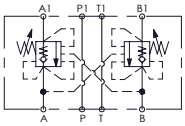	MBDP-060-ZTNR	Double acting, cetop 3	60	210	Flanged	Cetop 3	18.10.**140**
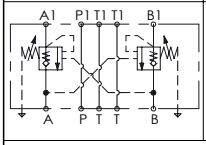	MBDT-100-ATNR	Double acting, cetop 5	100	350	Flanged	Cetop 5	18.09.**150**

MODULAR VALVE FOR CETOP

BNND-040-LE

CETOP 3

ATLANTIC Fluid Tech

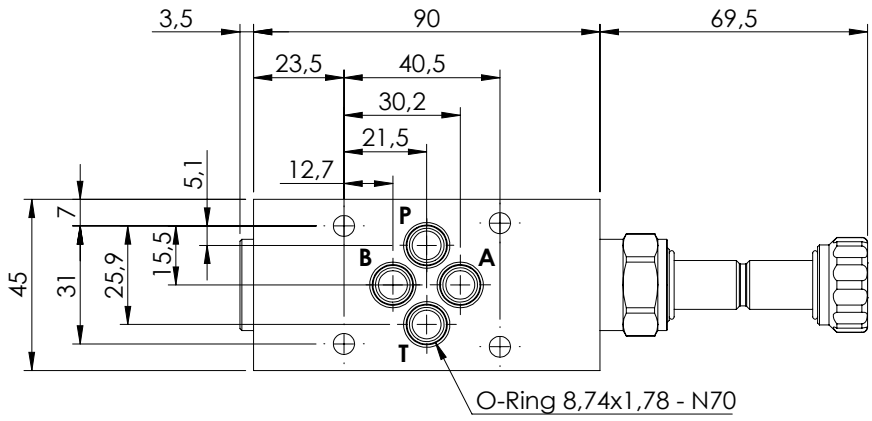

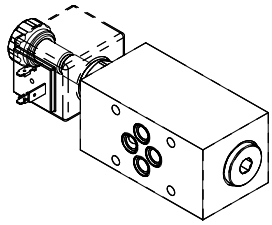

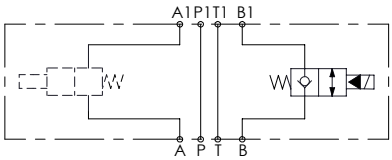

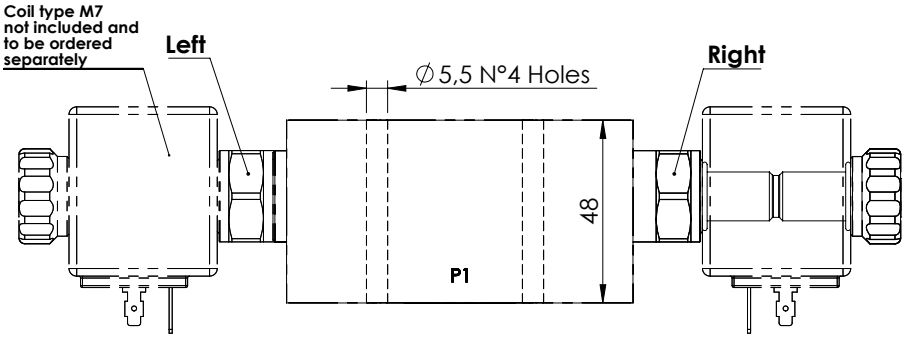

SPECIFICATIONS

Max. operating pressure:	210 bar
Rated flow:	40 l/min
Cavity:	Aluminium
Weight:	0,61 kg
Coil type:	M7

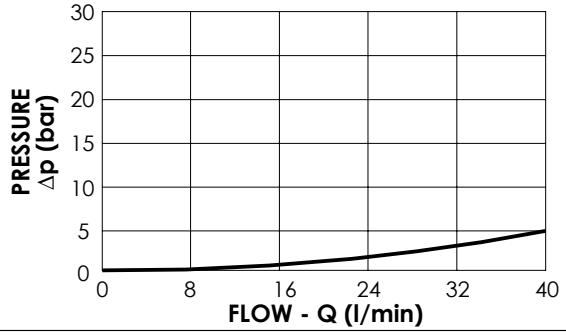

NOTES

ORDERING CODES

Quick code	Description	Main ports size	Version	
BD000034	BNND-040-LE-N06-N210-R	A,B,P,T: **CETOP 3**	Right	
BD000119	BNND-040-LE-N06-N210-L	A,B,P,T: **CETOP 3**	Left	

MODULAR VALVE FOR CETOP

BNFN-040-NT

CETOP 3

ATLANTIC Fluid Tech

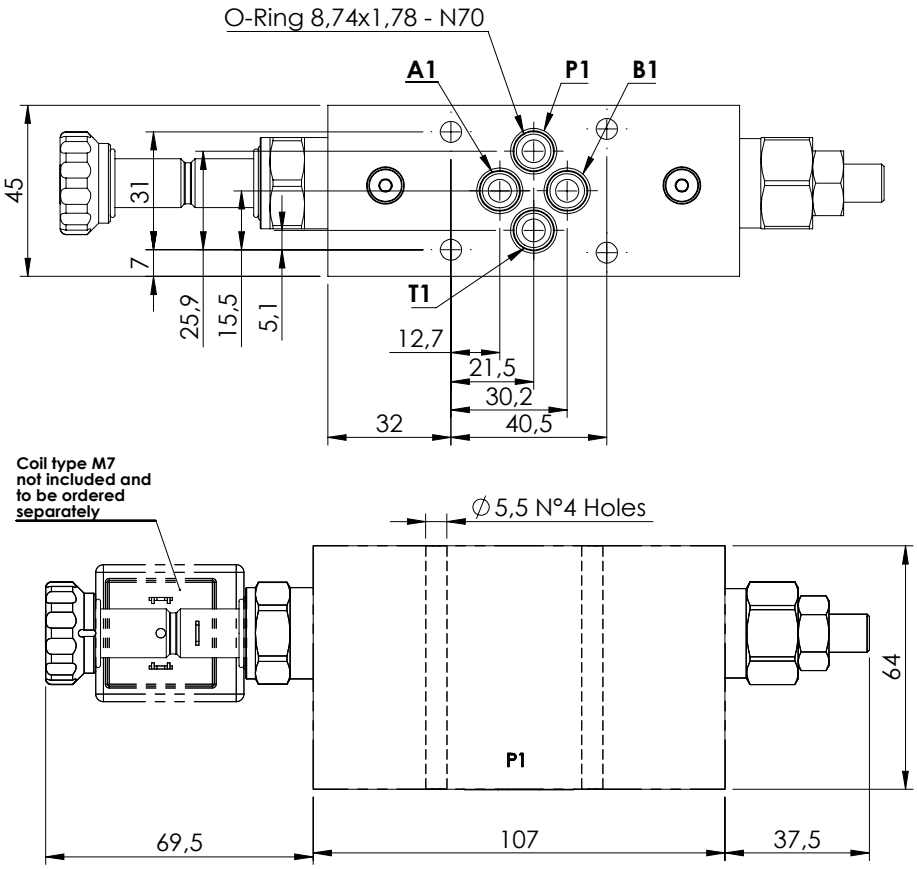

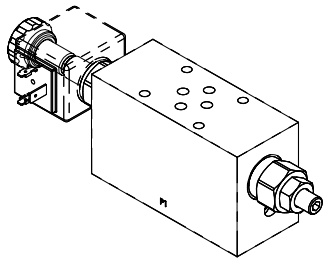

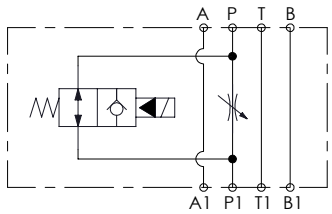

SPECIFICATIONS

Max. operating pressure:	**210 bar**
Rated flow:	**40 l/min**
Manifold:	**Aluminium**
Weight:	**1 kg**
Coil type:	**M7**

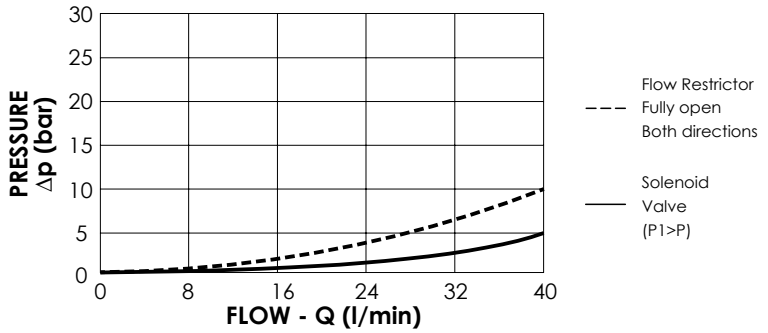

NOTES

ORDERING CODES

Quick code	Description	Main ports size	
BF000004	**BNFN-040-NT-N06-N210**	A,B,P,T: **CETOP 3**	

MODULAR VALVE FOR CETOP

KPLN-030-DPNA

CETOP 3

ATLANTIC Fluid Tech

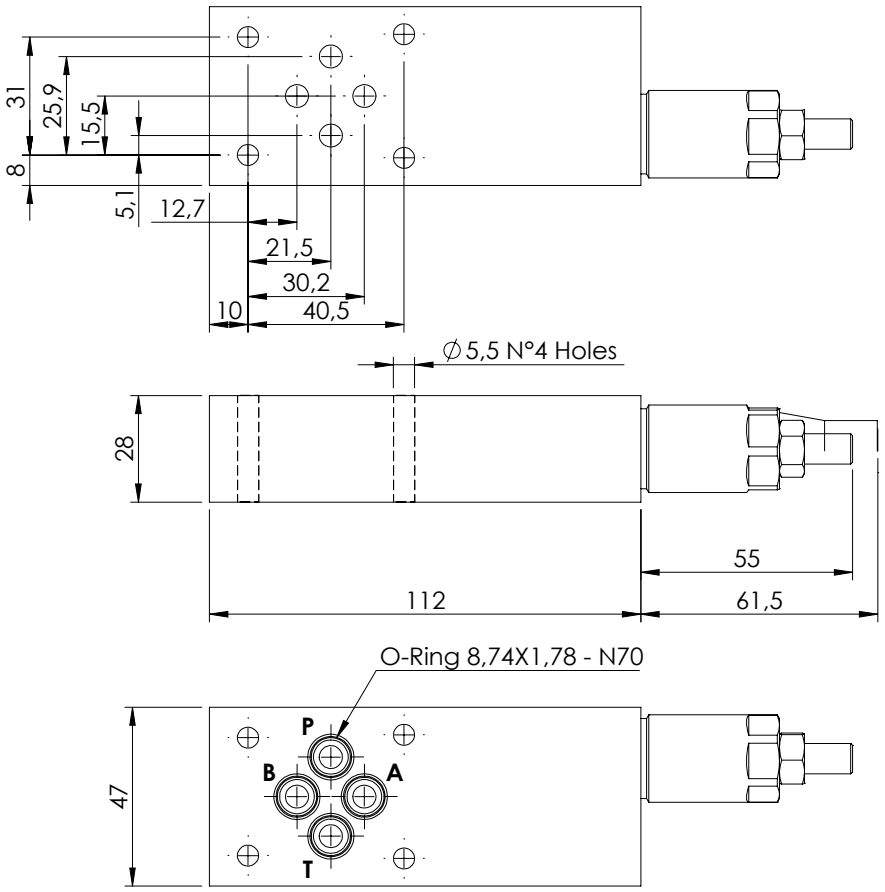

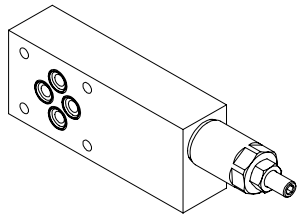

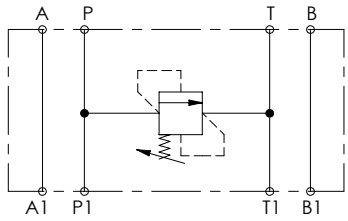

SPECIFICATIONS

Max. operating pressure:	210 bar
Rated flow:	30 l/min
Manifold:	Aluminium
Weight:	0,52 kg

SEALING CAP

Ordering code:

AT000020

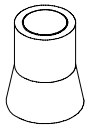

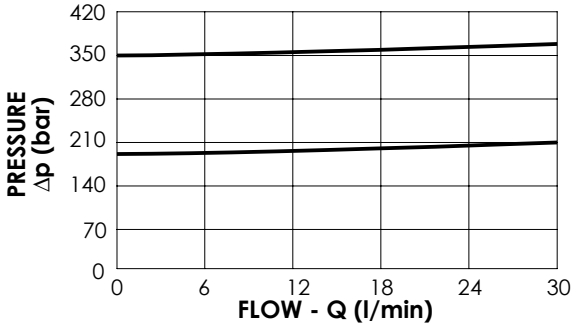

NOTES

ORDERING CODES

Quick code	Description	Main ports size	Standard setting (bar, Q=5 l/min)	Adjustm. range (bar)	Pressure increase (bar/turn)
KP000170	**KPLN-030-DPNA-HN-N06-N350**	A,B,P,T: **CETOP 3**	**350**	**100-350**	**91**
KP000112	**KPLN-030-DPNA-HN-N06-N200**	A,B,P,T: **CETOP 3**	**200**	**50-210**	**42**

MODULAR VALVE FOR CETOP

KPLN-030-DPNA

CETOP 3 SUBPLATE

ATLANTIC Fluid Tech

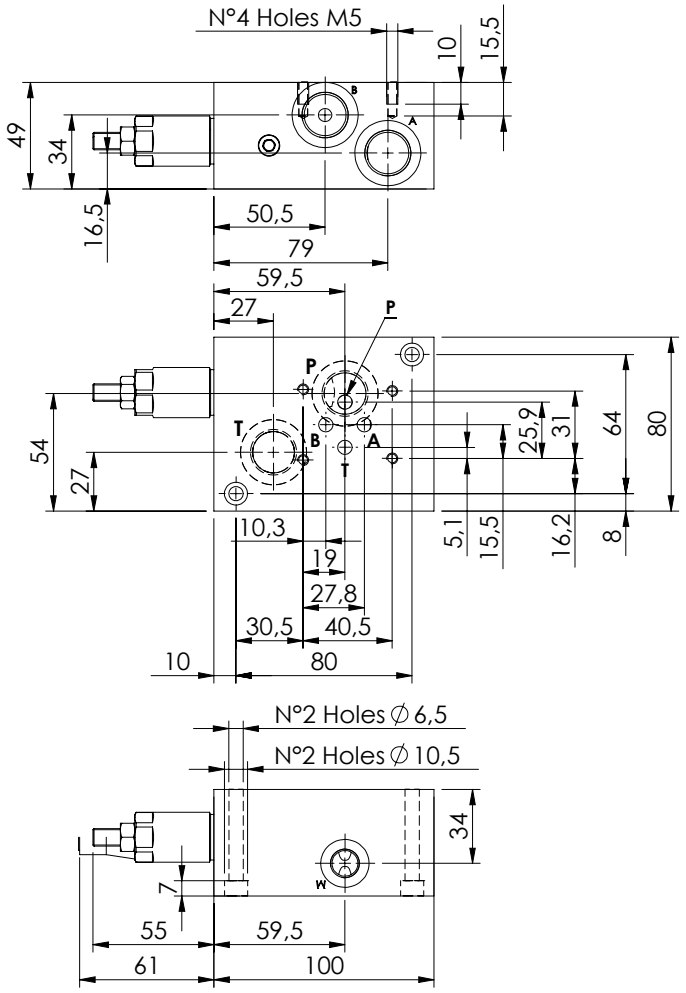

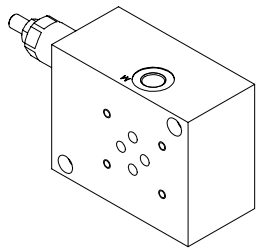

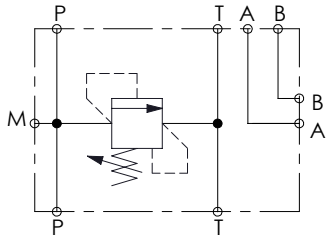

SPECIFICATIONS

Max. operating pressure:	**350 bar**
Rated flow:	**30 l/min**
Manifold:	**Aluminium**
Weight:	**1,04 kg**

SEALING CAP

Ordering code:

AT000020

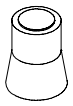

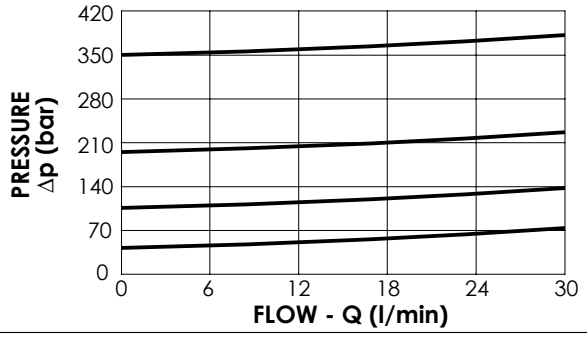

NOTES

ORDERING CODES

Quick code	Description	Main ports size	Standard setting (bar, Q=5 l/min)	Adjustm. range (bar)	Pressure increase (bar/turn)
KP000071	**KPLN-030-DPNA-HN-N06-N350**	A,B,P,T : **CETOP 3** A,B,P,T : **G 1/2"** ; M: **G1/4"**	**350**	**100-350**	**91**
KP000072	**KPLN-030-DPNA-HN-N06-N200**	A,B,P,T : **CETOP 3** A,B,P,T : **G 1/2"** ; M: **G1/4"**	**200**	**50-210**	**42**
KP000073	**KPLN-030-DPNA-HN-N06-N100**	A,B,P,T : **CETOP 3** A,B,P,T : **G 1/2"** ; M: **G1/4"**	**100**	**30-100**	**20**
KP000074	**KPLN-030-DPNA-HN-N06-N050**	A,B,P,T : **CETOP 3** A,B,P,T : **G 1/2"** ; M: **G1/4"**	**50**	**5-50**	**10**

MODULAR VALVE FOR CETOP

KPLN-080-DPNA

CETOP 5 SUBPLATE

ATLANTIC Fluid Tech

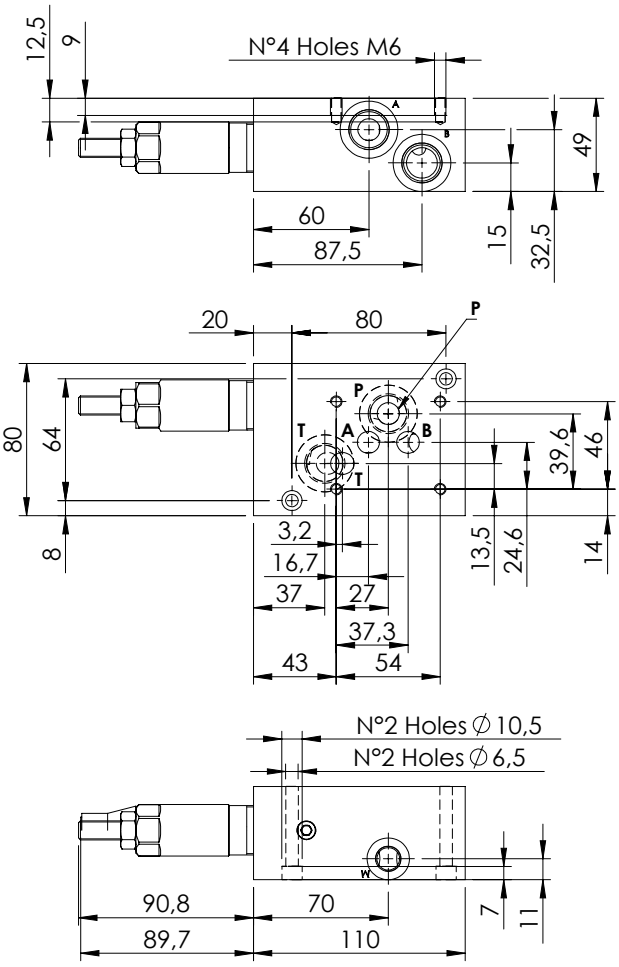

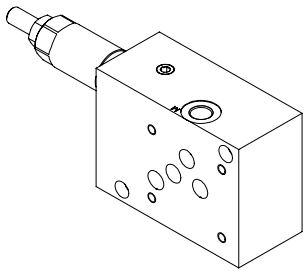

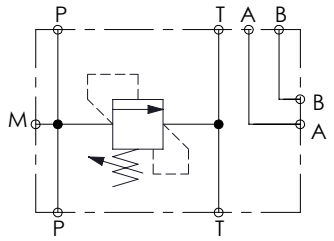

SPECIFICATIONS

Max. operating pressure:	**350 bar**
Rated flow:	**80 l/min**
Manifold:	**Aluminium**
Weight:	**1,26 kg**

SEALING CAP

Ordering code:

AT000021

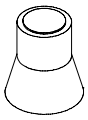

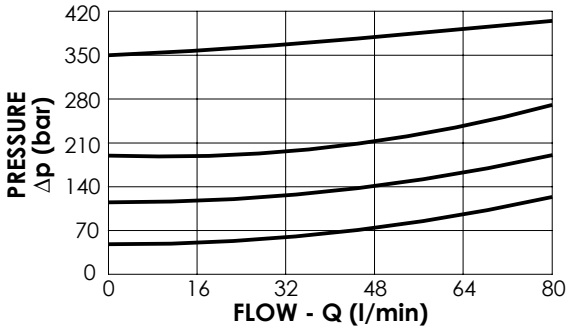

NOTES

ORDERING CODES

Quick code	Description	Main ports size	Standard setting (bar, Q=5 l/min)	Adjustm. range (bar)	Pressure increase (bar/turn)
KP000075	**KPLN-080-DPNA-HN-N10-N350**	A,B,P,T : **CETOP 5** A,B,P,T : **G 1/2"** ;M: **G1/4"**	**350**	**100-350**	**42**
KP000076	**KPLN-080-DPNA-HN-N10-N200**	A,B,P,T : **CETOP 5** A,B,P,T : **G 1/2"** ;M: **G1/4"**	**200**	**60-210**	**24**
KP000077	**KPLN-080-DPNA-HN-N10-N100**	A,B,P,T : **CETOP 5** A,B,P,T : **G 1/2"** ;M: **G1/4"**	**100**	**25-100**	**13**
KP000102	**KPLN-080-DPNA-HN-N10-N050**	A,B,P,T : **CETOP 5** A,B,P,T : **G 1/2"** ;M: **G1/4"**	**50**	**5-50**	**9**

MODULAR VALVE FOR CETOP

KPLT-030-DPNA

CETOP 3

ATLANTIC Fluid Tech

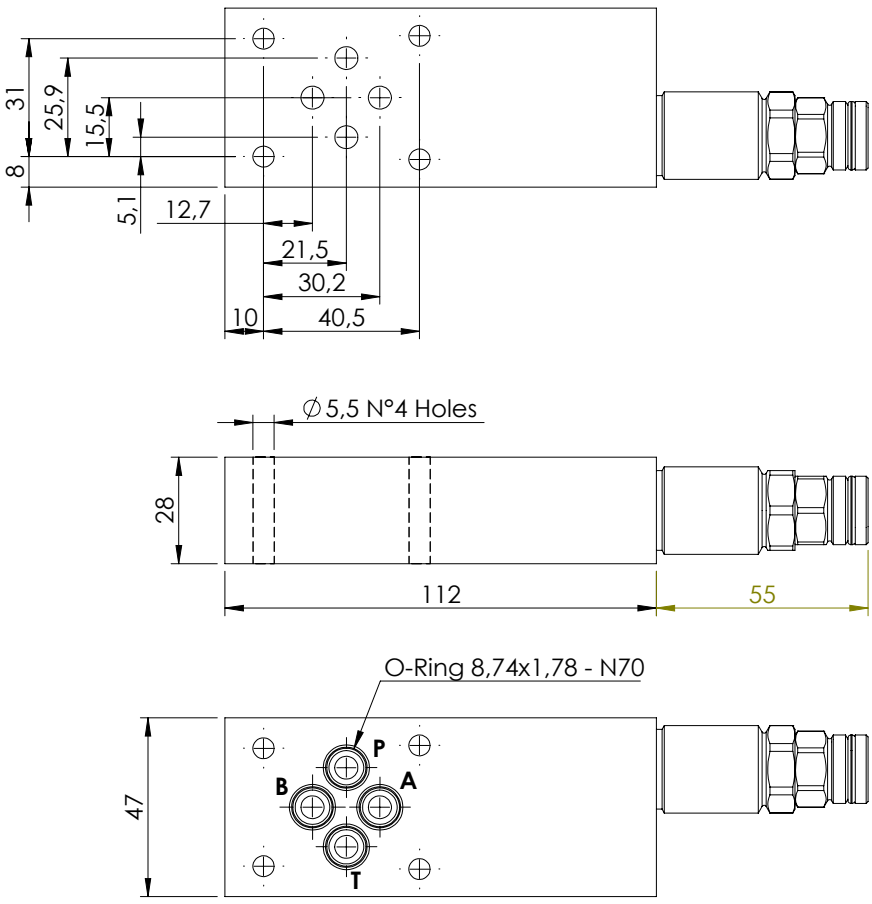

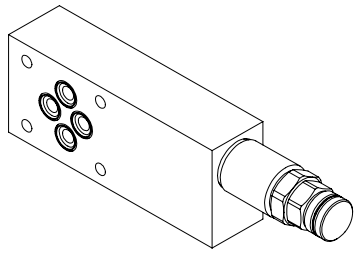

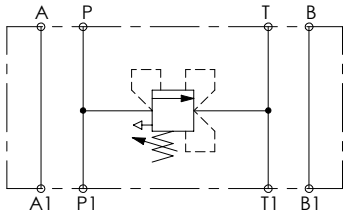

SPECIFICATIONS

Max. operating pressure:	210 bar
Rated flow:	30 l/min
Manifold:	Aluminium
Weight:	0,54 kg

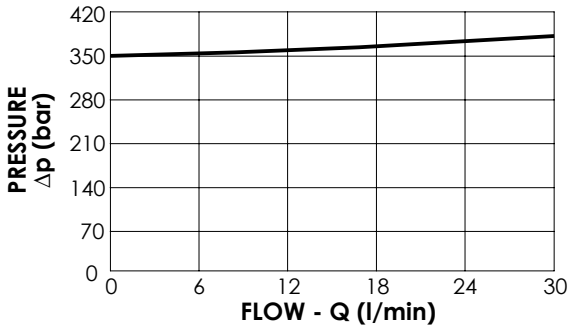

NOTES

ORDERING CODES

Quick code	Description	Main ports size	Standard setting (bar, Q=5 l/min)	Adjustm. range (bar)	Pressure increase (bar/turn)
KP000171	**KPLT-030-DPNA-HN-N06-N350**	A,B,P,T: **CETOP 3**	**350**	**100-350**	**91**

MODULAR VALVE FOR CETOP

MBSN-060-ZTNP

SINGLE ACTING
CETOP 3

ATLANTIC Fluid Tech

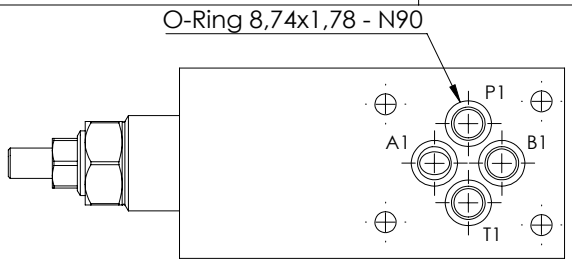

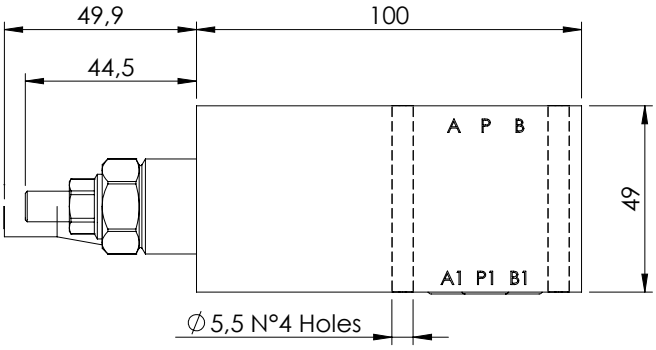

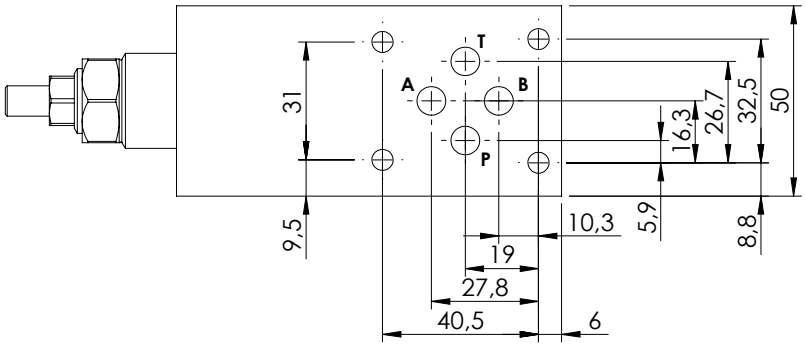

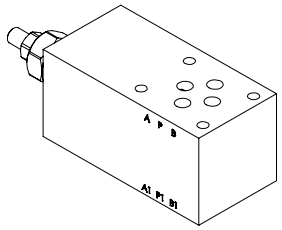

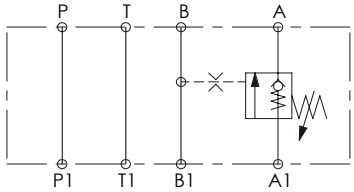

SPECIFICATIONS

Max. operating pressure:	**250 bar**
Rated flow:	**60 l/min**
Manifold:	**Aluminium**
Weight:	**724,9 g**

SEALING CAP

Ordering code:
AT000020

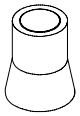

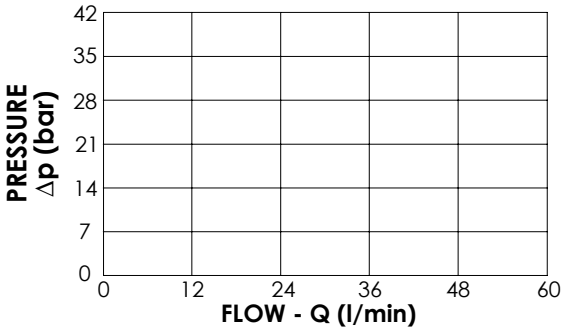

NOTES

Setting: at least 1.3 times the load induced pressure

ORDERING CODES

Quick code	Description	Pilot ratio	Main ports size	Standard setting (bar, Q=5 l/min)	Adjust. range (bar)	Pressure increase (bar/turn)
MB000923	**MBSN-060-ZTNP-01-N06-N250**	**1:0**	A,B,P,T: **CETOP 3**	**25**	**3-30**	**5**

CETOP AND MODULAR VALVE

MBSN-060-ARNR

SINGLE ACTING
CETOP 3

ATLANTIC Fluid Tech

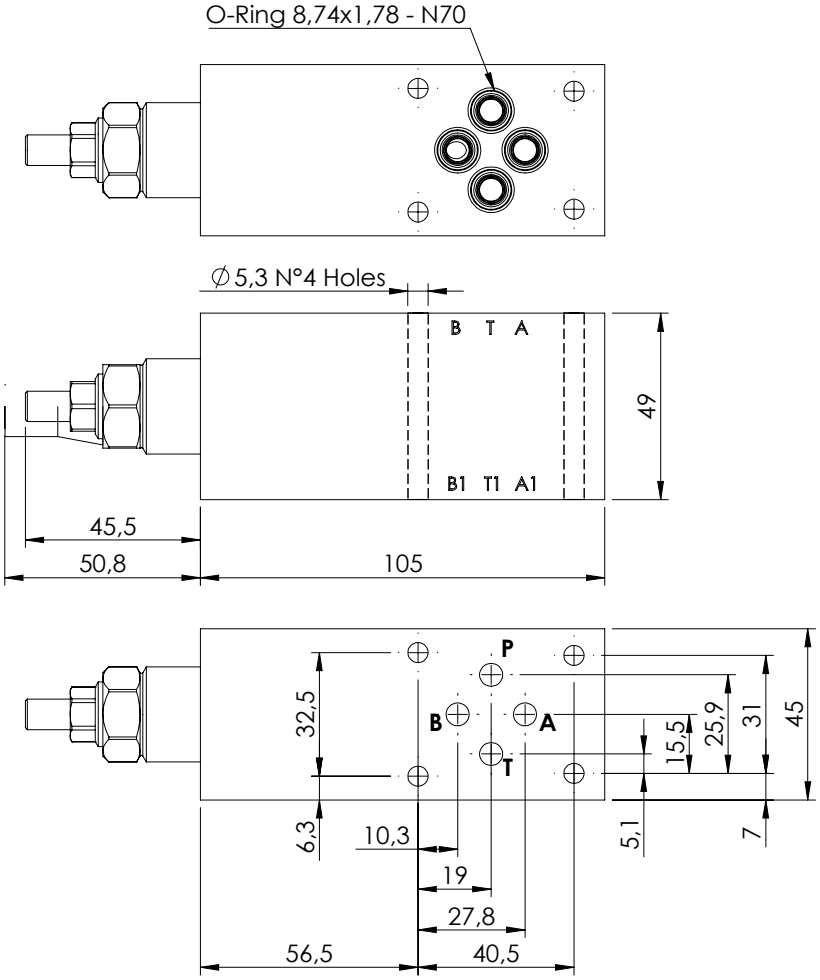

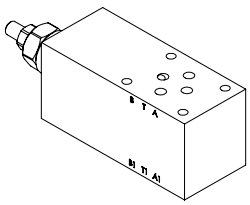

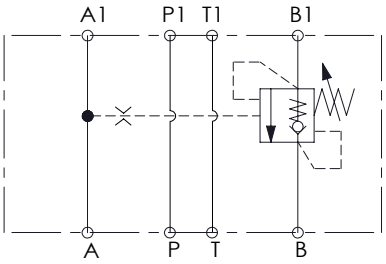

SPECIFICATIONS

Max. operating pressure:	**350 bar**
Rated flow:	**60 l/min**
Manifold:	**Steel**
Weight:	**1,78 kg**

SEALING CAP

Ordering code:

AT000020

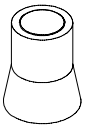

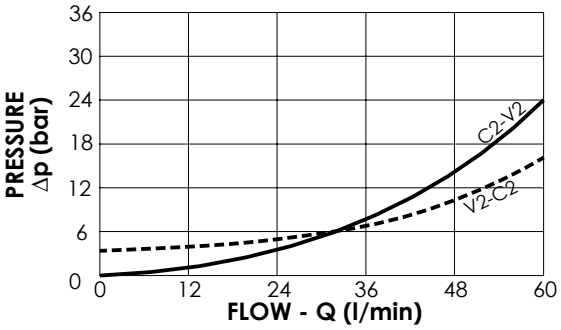

NOTES

Setting: at least 1.3 times the load induced pressure

ORDERING CODES

Quick code	Description	Pilot ratio	Main ports size	Standard setting (bar, Q=5 l/min)	Adjust. range (bar)	Pressure increase (bar/turn)
MB000886	**MBSN-060-ATNR-04-N06-N350**	**4,2:1**	A,B,P,T: **CETOP 3**	**350**	**100-350**	**139**

MODULAR VALVE FOR CETOP

MBST-100-ZTNP

SINGLE ACTING
CETOP 5

ATLANTIC Fluid Tech

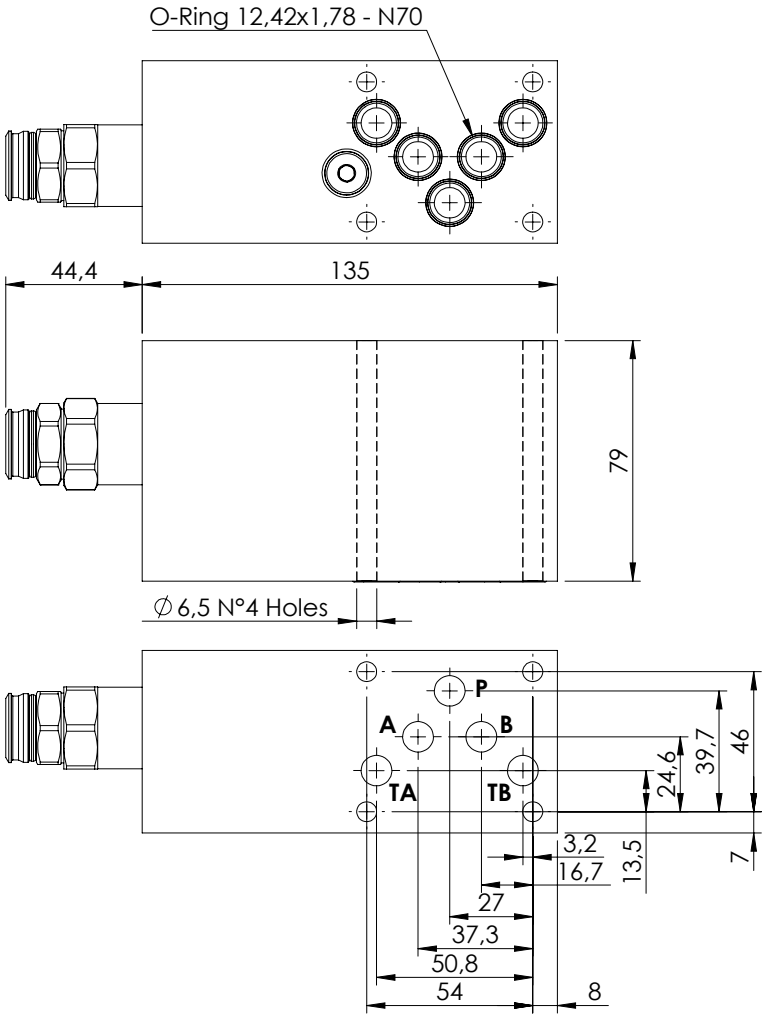

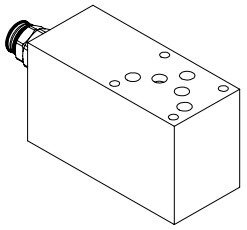

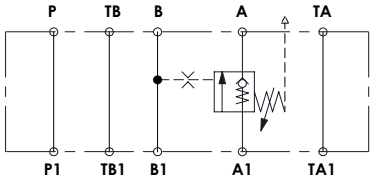

SPECIFICATIONS

Max. operating pressure:	250 bar
Rated flow:	100 l/min
Manifold:	Aluminium
Weight:	1734,8 g

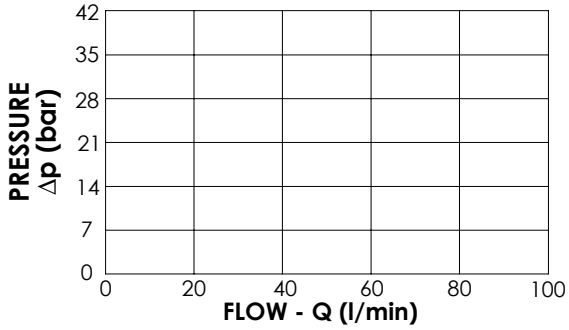

NOTES

Setting: at least 1.3 times the load induced pressure

ORDERING CODES

Quick code	Description	Pilot ratio	Main ports size	Standard setting (bar, Q=5 l/min)	Adjust. range (bar)	Pressure increase (bar/turn)
MB000924	**MBST-100-ZTNP-01-T10-N250**	**1:0**	A,B,P,T: **CETOP 5**	**10**	**3-25**	**8**

MODULAR VALVE FOR CETOP

MBDN-030-LTNR

DOUBLE ACTING
CETOP 3

ATLANTIC Fluid Tech

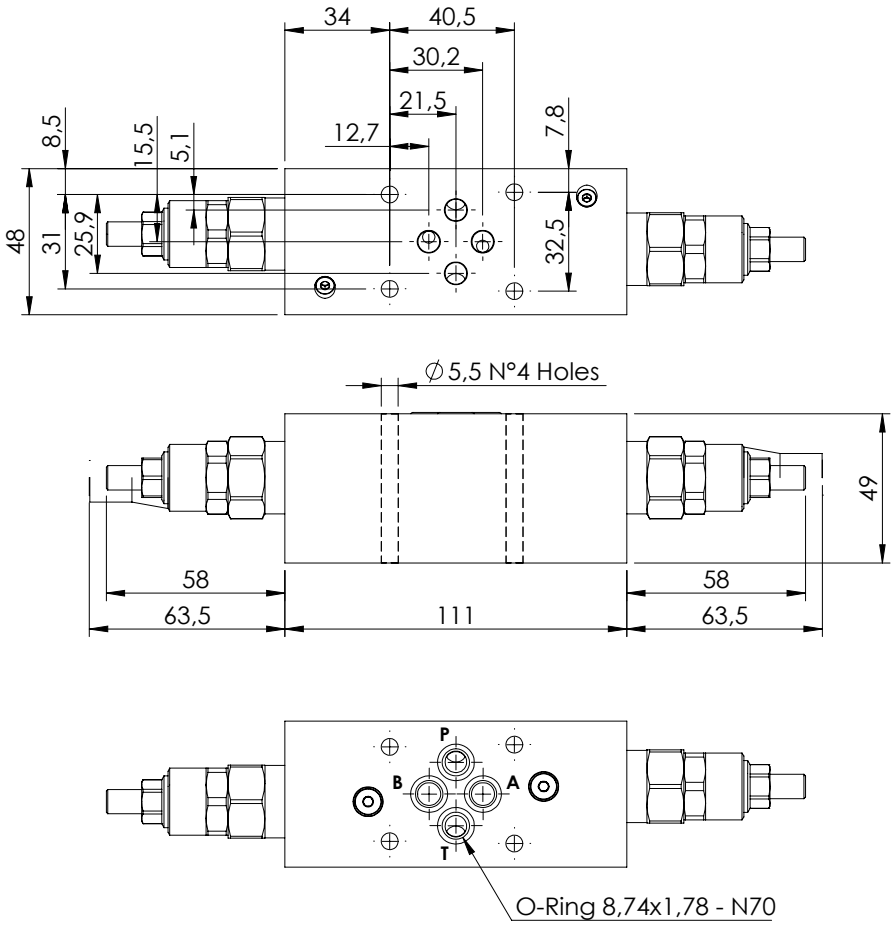

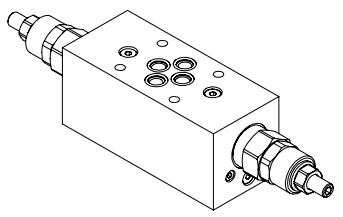

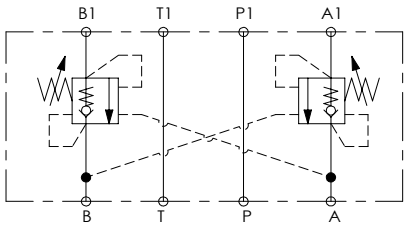

SPECIFICATIONS

Max. operating pressure:	**210 bar**
Rated flow:	**30 l/min**
Manifold:	**Aluminium**
Weight:	**1 kg**

SEALING CAP

Ordering code:

AT000020

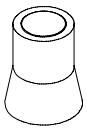

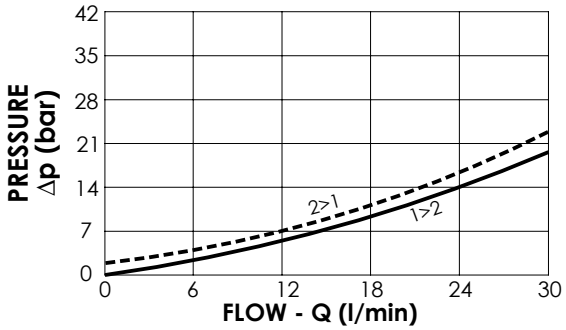

NOTES

Setting: at least 1.3 times the load induced pressure

ORDERING CODES

Quick code	Description	Pilot ratio	Main ports size	Standard setting (bar, Q=5 l/min)	Adjust. range (bar)	Pressure increase (bar/turn)
MB000917	**MBDN-030-LTNR-04-N06-N210**	**4:1**	A,B,P,T: **CETOP 3**	**200**	**70-210**	**93,5**

MODULAR VALVE FOR CETOP

MBDN-060-ZTNR

DOUBLE ACTING CETOP 3

ATLANTIC Fluid Tech

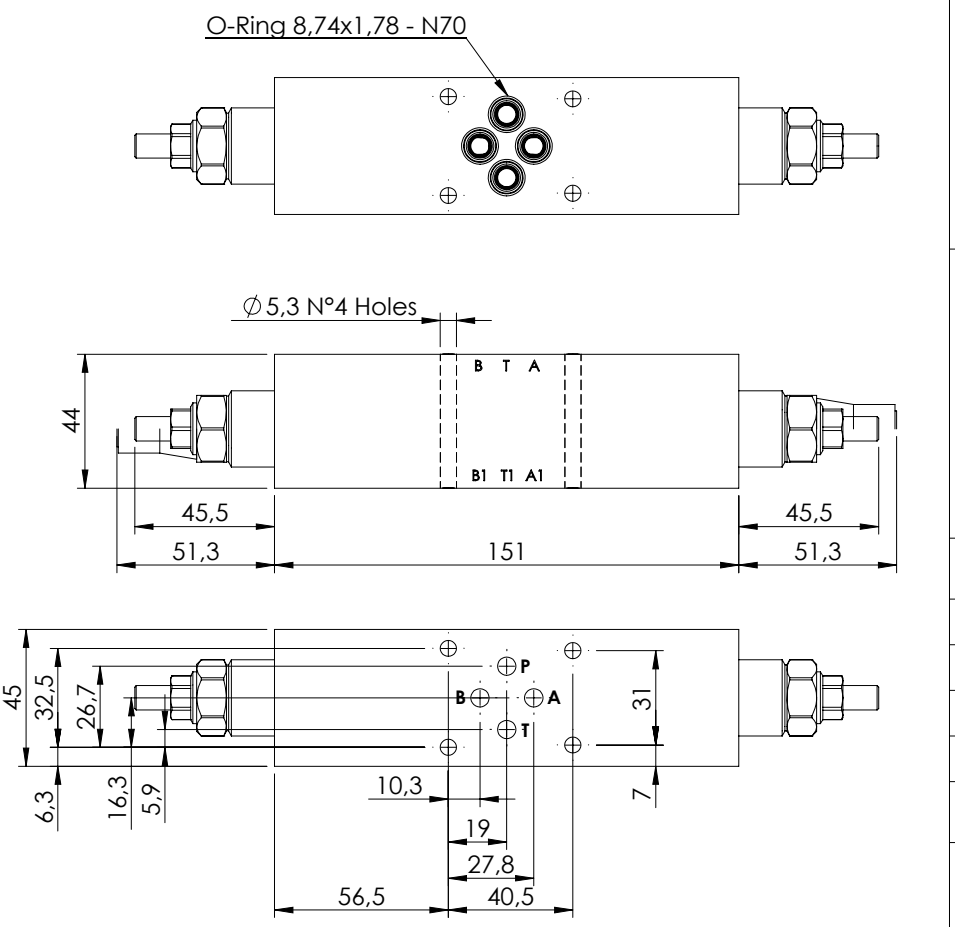

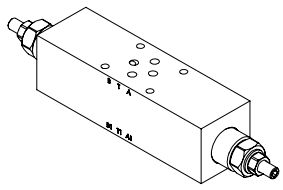

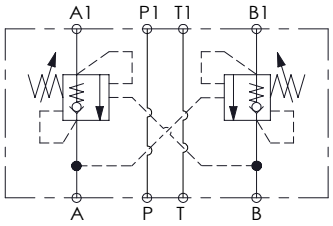

SPECIFICATIONS

Max. operating pressure:	350 bar
Rated flow:	60 l/min
Manifold:	Aluminium
Weight:	1,03 kg

SEALING CAP

Ordering code:

AT000020

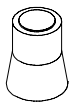

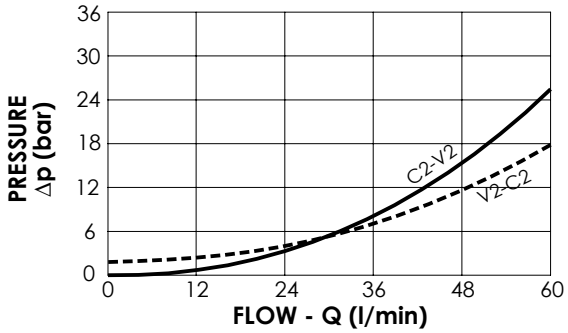

NOTES

Setting: at least 1.3 times the load induced pressure

ORDERING CODES

Quick code	Description	Pilot ratio	Main ports size	Standard setting (bar, Q=5 l/min)	Adjust. range (bar)	Pressure increase (bar/turn)
MB000517	**MBDN-060-ZTNR-04-N06-N350**	**4,2:1**	A,B,P,T: **CETOP 3**	**350**	**100-350**	**138**
MB000546	**MBDN-060-ZTNR-04-N06-N200**	**4,2:1**	A,B,P,T: **CETOP 3**	**200**	**60-210**	**62**

MODULAR VALVE FOR CETOP

MBDN-060-ATNR

DOUBLE ACTING CETOP 3

ATLANTIC Fluid Tech

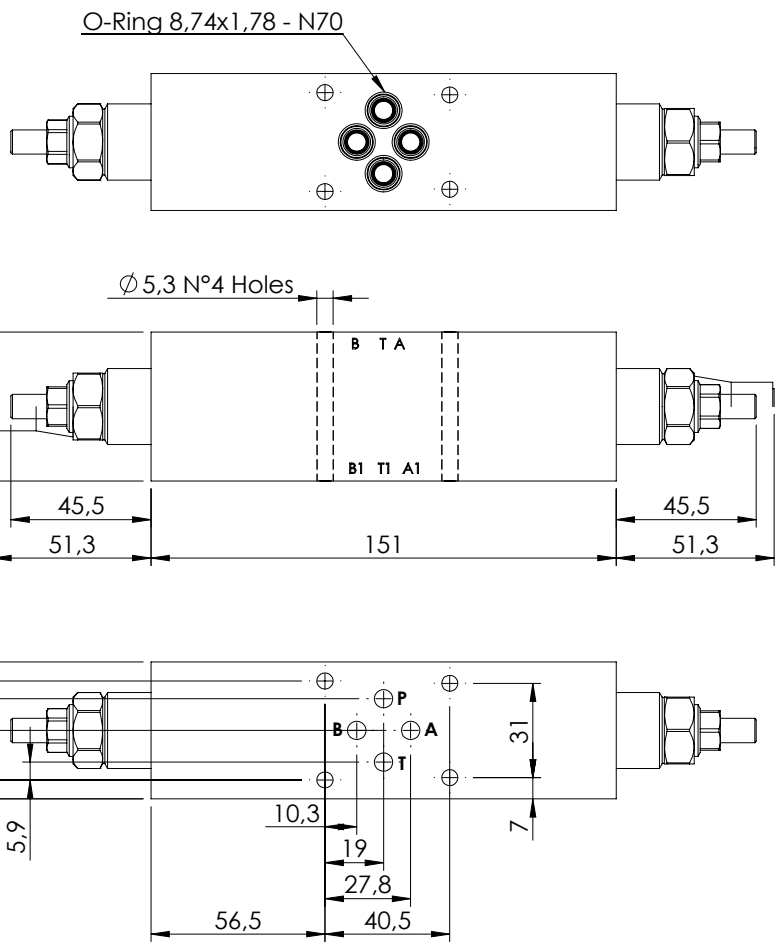

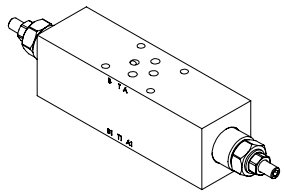

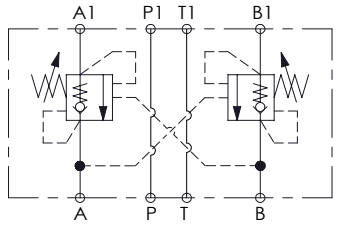

SPECIFICATIONS

Max. operating pressure:	350 bar
Rated flow:	60 l/min
Manifold:	Steel
Weight:	2,61 kg

SEALING CAP

Ordering code:

AT000020

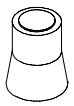

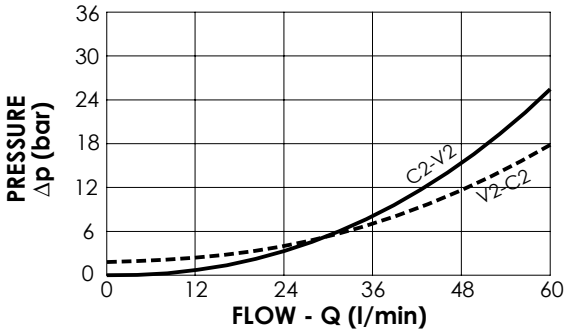

NOTES

Setting: at least 1.3 times the load induced pressure

ORDERING CODES

Quick code	Description	Pilot ratio	Main ports size	Standard setting (bar, Q=5 l/min)	Adjust. range (bar)	Pressure increase (bar/turn)
MB000929	**MBDN-060-ATNR-04-N06-N350**	**4,2:1**	A,B,P,T: **CETOP 3**	**350**	**100-350**	**138**
MB000774	**MBDN-060-ATNR-04-N06-N200**	**4,2:1**	A,B,P,T: **CETOP 3**	**200**	**50-210**	**62**

MODULAR VALVE FOR CETOP

MBDN-100-ZTNR

DOUBLE ACTING
CETOP 5

ATLANTIC Fluid Tech

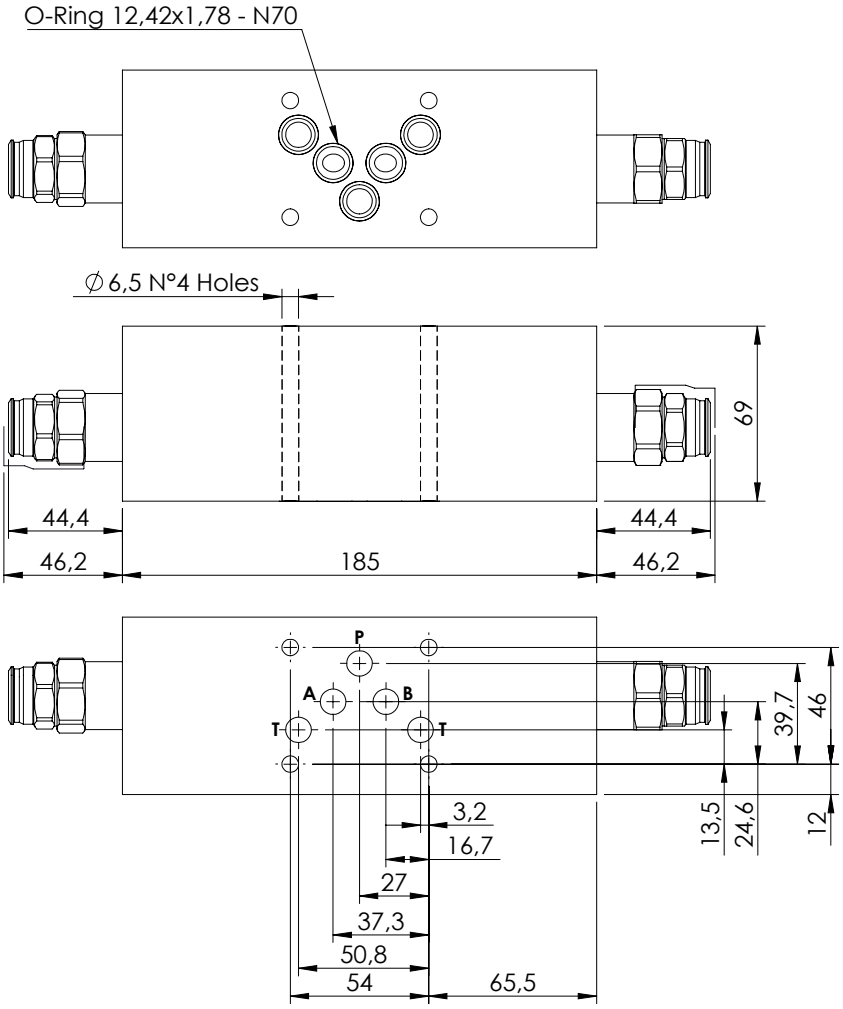

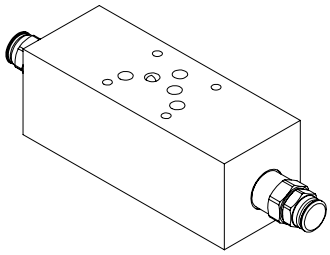

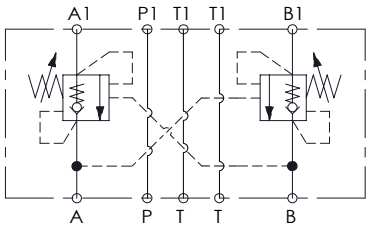

SPECIFICATIONS

Max. operating pressure:	**350 bar**
Rated flow:	**100 l/min**
Manifold:	**Aluminium**
Weight:	**2,64 kg**

SEALING CAP

Ordering code:

PT000243

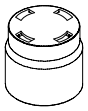

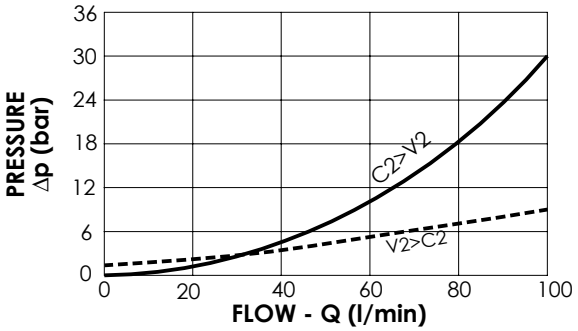

NOTES

Setting: at least 1.3 times the load induced pressure

ORDERING CODES

Quick code	Description	Pilot ratio	Main ports size	Standard setting (bar, Q=5 l/min)	Adjust. range (bar)	Pressure increase (bar/turn)
MB000916	**MBDN-100-ZTNR-04-N10-N350**	**4:1**	A,B,P,T: **CETOP 5**	**350**	**100-350**	**118**

OVERCENTRE VALVE

MBDP-060-ZTNR

DOUBLE ACTING CETOP 3

ATLANTIC Fluid Tech

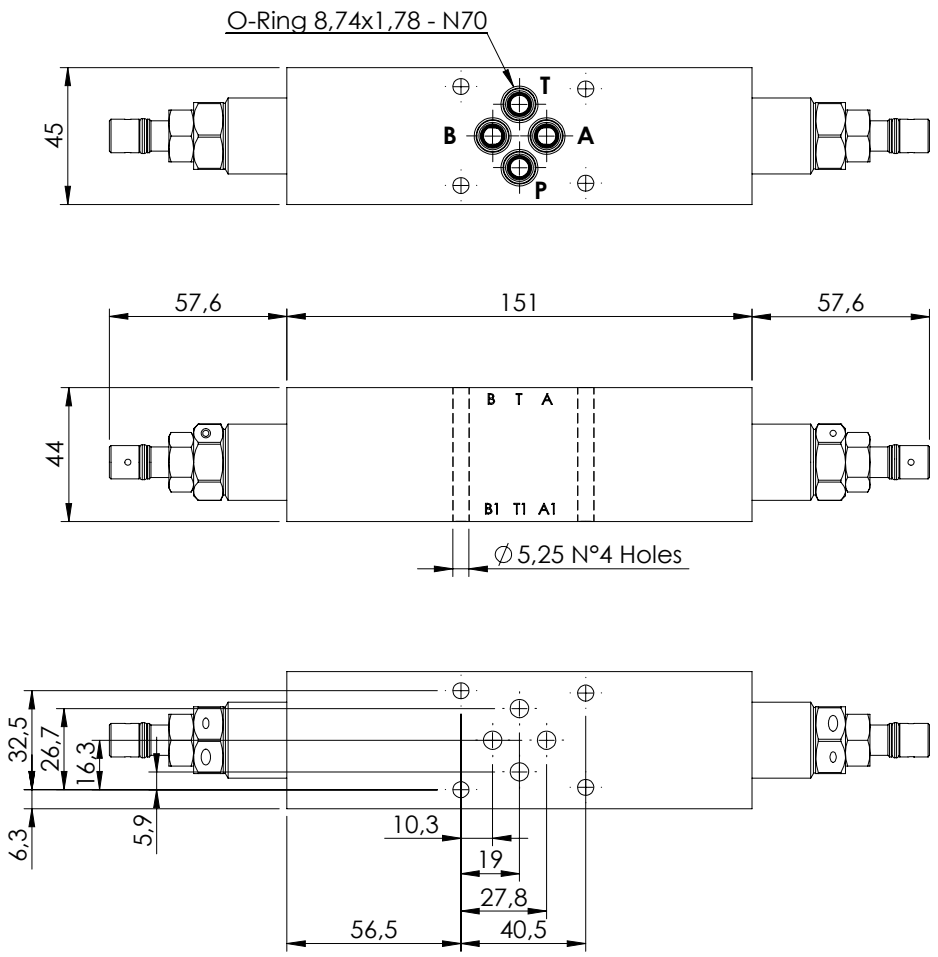

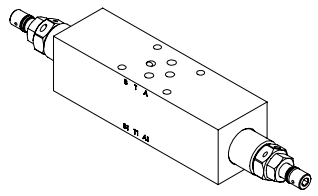

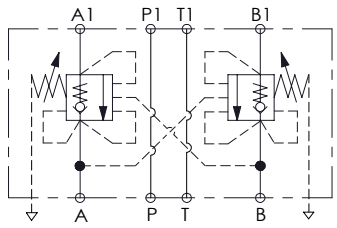

SPECIFICATIONS

Max. operating pressure:	**350 bar**
Rated flow:	**60 l/min**
Manifold:	**Aluminium**
Weight:	**1,09 kg**

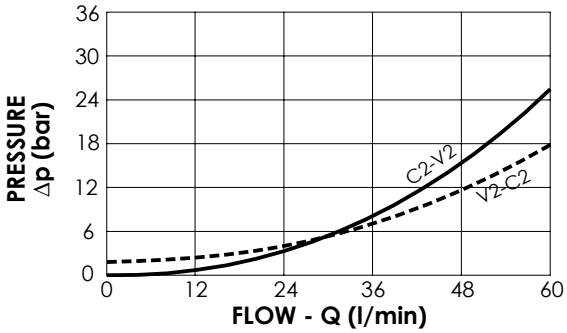

NOTES

Setting: at least 1.3 times the load induced pressure

ORDERING CODES

Quick code	Description	Pilot ratio	Main ports size	Standard setting (bar, Q=5 l/min)	Adjust. range (bar)	Pressure increase (bar/turn)
MB000454	**MBDP-060-ZTNR-04-N06-N350**	**4,2:1**	A,B,P,T: **CETOP 3**	**350**	**100-350**	**166**

MODULAR VALVE FOR CETOP

MBDT-100-ARNR

CETOP 5

ATLANTIC Fluid Tech

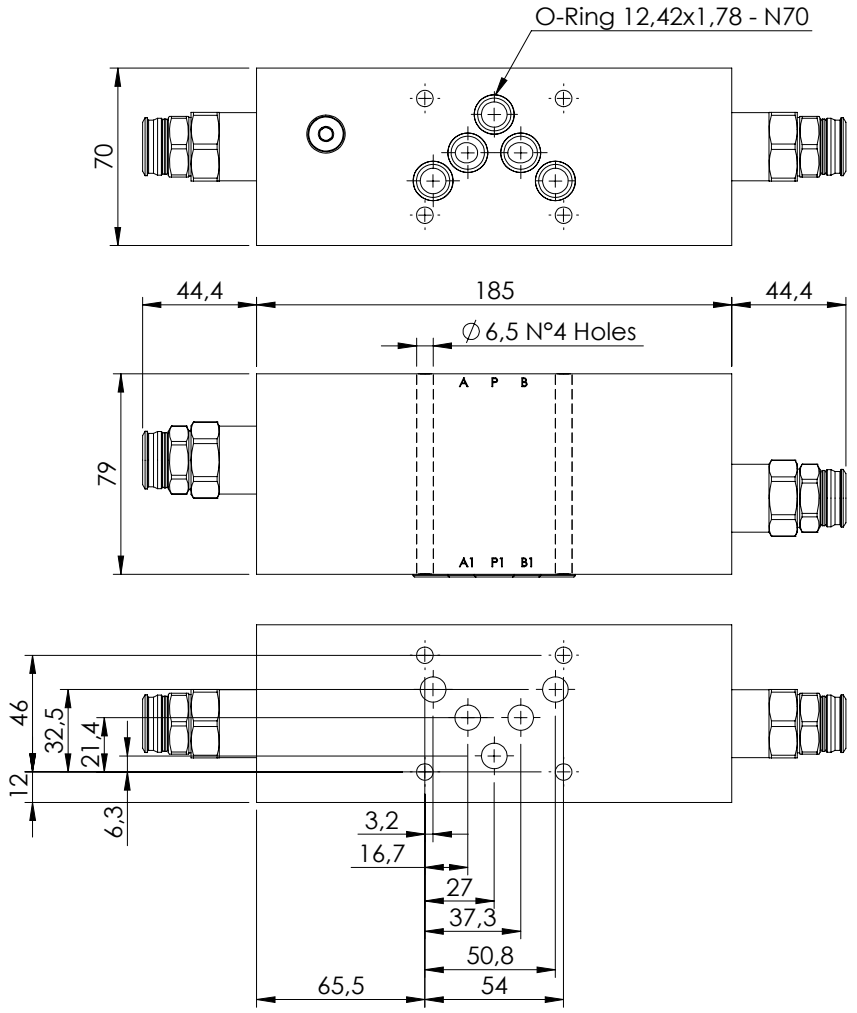

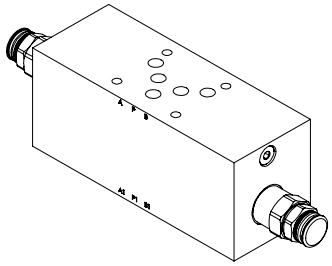

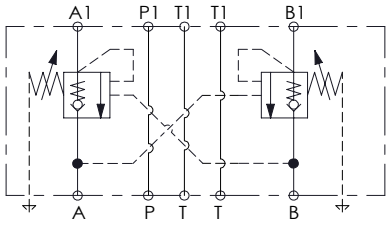

SPECIFICATIONS

Max. operating pressure:	**350 bar**
Rated flow:	**100 l/min**
Manifold:	**Steel**
Weight:	**7,7 kg**

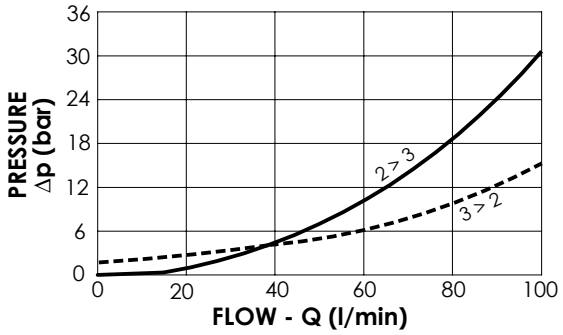

NOTES

Setting: at least 1.3 times the load induced pressure

ORDERING CODES

Quick code	Description	Pilot ratio	Main ports size	Standard setting (bar, Q=5 l/min)	Adjust. range (bar)	Pressure increase (bar/turn)
MB000930	**MBDT-100-ATNR-04-N10-N350**	**3,8:1**	A,B,P,T: **CETOP 5**	**350**	**100-350**	**118**

ATLANTIC
Fluid Tech

SECTION 19

Directional Valves

MANAGEMENT SYSTEM CERTIFICATION
DNV·GL
ISO 9001 = ISO 14001
OHSAS 18001

DIRECTIONAL VALVES

Hydraulic scheme	Valve description	Valve type	Rated flow (l/min)	Max. pressure (bar)	Page
	EBN	On-off or proportional	30/60	210/320	19.10.**000**
	EBL	Load sensing, on-off or proportional	30/60	210/320	19.20.**000**
	EBP	Precompensated, load sensing, on-off or proportional	30/60	210/320	19.30.**000**
	Accessories	-	-	-	19.90.**000**

EBN series

MONOBLOCK DIRECTIONAL VALVE ON-OFF OR PROPORTIONAL

ATLANTIC Fluid Tech

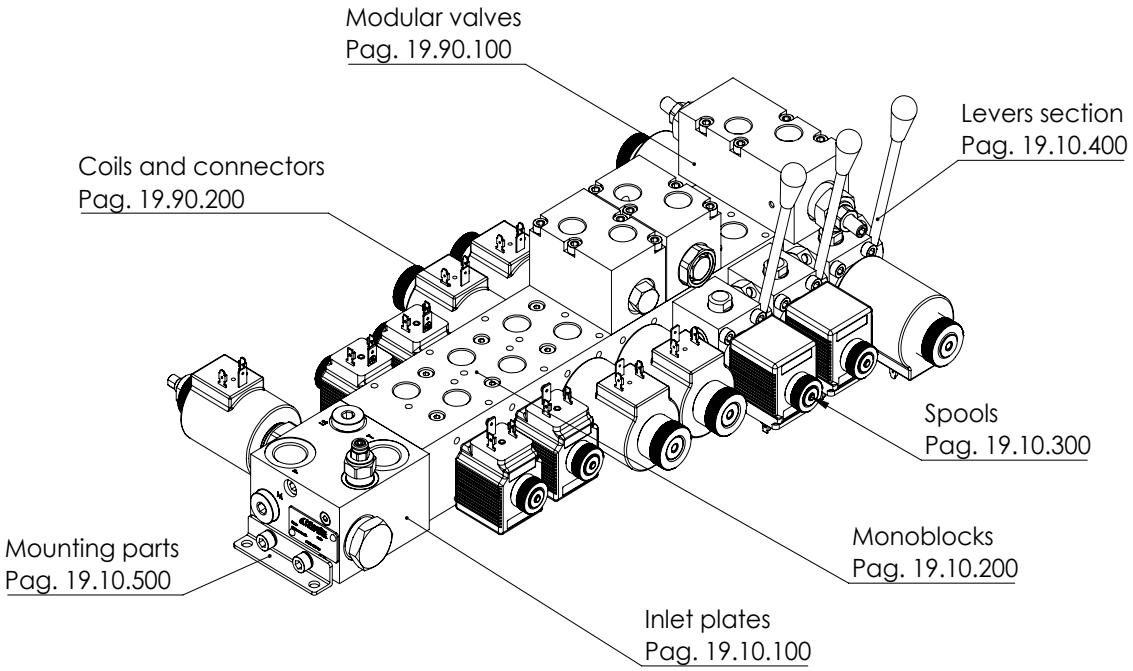

FEATURES

- Compact dimensions
- Low weight
- Custom spools
- Custom inlet blocks
- Sandwich valves for extra functions
- Cast iron monoblock and aluminum inlet block for standard applications
- High resistance cast iron monoblock and steel inlet block for high pressure systems
- Optional levers for manual operation
- No leak risk between sections
- Spools not under rod tension
- Zinc plated/anodized components for corrosion resistance

SPECIFICATION\DESCRIPTION

MAXIMUM OPERATING PRESSURE	Steel inlet block: 320 bar (4500 PSI) Aluminium inlet block: 210 bar (3045 PSI)
MAXIMUM TANK PRESSURE	20 bar (290 PSI)
RATED FLOW	030 series: 30 l/min (7.9 GPM) 060 series: 60l/min (15.8 GPM)
COIL POWER	030 series: 26 W 060 series: 33 W
VOLTAGE	12 VDC, 24 VDC, others on request
COIL CONNECTOR	DIN43650, AMP Junior, Deutsch DT04-2P
PORTS	Inlet: G1/2", 1/2 JiS, 7/8-14 UNF-2B (SAE#10) Outlet: G3/8",3/8 JIS, 3/4-16 UNF-2B (SAE#8)
OPERATING TEMPERATURE	NBR (ISO 1629) seals: -30, + 80 °C FKM (ISO 1629) seals: -20, +110 °C
FILTRATION	ISO 4406:1999: class 19/17/14 NAS 1638: class 8
MOUNTING POSITION	No restrictions
MATERIAL	Spool body: cast iron Spool: hardened and grounded steel Inlet block: Aluminium or steel
SURFACE TREATMENT	Steel: zinc plating Aluminium: anodization

EBN series is a new directional valve that has innovative features in terms of performance, dimension, manufacturing reliability and customization. The valve consists in an inlet block flanged to a monoblock with spools. This construction gives the advantages of high flexibility in inlet block schemes, combined with the reliability and simplicity of monoblock spool valve construction, eliminating the risk of spools blocking due to overtightening of tie rods or the risk of leakage between sections. The spool monoblock is a 2 or 3 position, 4 ways, direct acting solenoid operated type. All sections have threaded ports at the top and removable plugs for tank connections to allow the installation of flanged blocks with additional functions like crossover reliefs, reliefs to tank, relief and anticavitations, counterbalance valves, P.O. checks, flow restrictors and flow regulators. All sections are equipped with standard push button override and they can be equipped with lever for manual use.

HOW ORDER IT

To order an assembled block, contact AFT sales network specifying the part numbers following page 19.90.900 path.

For special versions please contact AFT sales network.

To order the separate parts please refer to each catalogue page.

EBN series - INLET SECTION

SFNL-060-ZNNN-01

P, T PORTS
M PORTS

ATLANTIC Fluid Tech

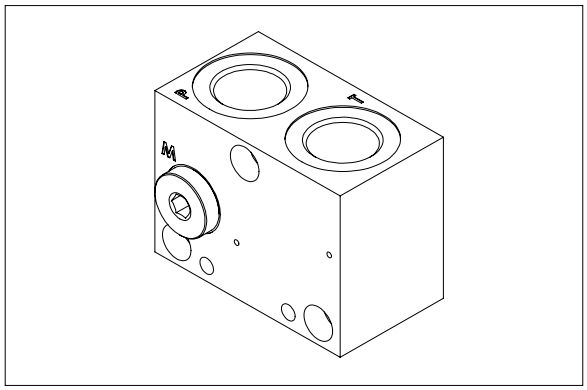

This inlet section is equipped with two thread ports (P, T) available in two different types G 1/2" or 3/4"-16 UNF plus a third threaded port M for pressure measuring available in G 1/4" or 7/16"-20.
The manifold material is aluminium for applications up to 210 bar or zinc plated steel for applications up to 320 bar.

TECHNICAL DATA

Max pressure	210/320 bar
Rated flow	60 l/min
Hydraulic fluid	Mineral oil DIN 51524
Fluid viscosity	10-500 mm²/s
Fluid temperature	-25°C/75°C
Enviroment temperature	-25°C/60°C
Weight	0,3 Kg

HYDRAULIC SCHEME

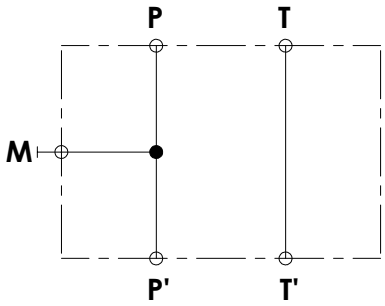

PRESSURE DROP

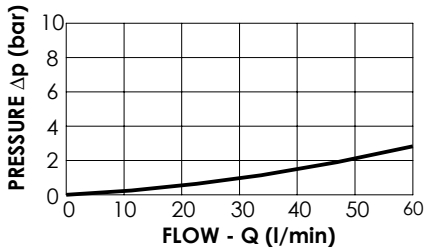

ORDERING DETAILS: SEPARATE ELEMENTS

SFNL-060-[*]NNN-01-[***]-N

*	MATERIAL TYPE
A	Steel zinc-plated (320 bar)
Z	Aluminium anodized (210 bar)

***	PORTS		
	P line	**T** line	**M**
G12	G 1/2"	G 1/2"	G 1/4"
U34	3/4"-16 UNF	3/4"-16 UNF	7/16"-20 UNF

QUICK CODE	
DESCRIPTION	CODE
SFNL-060-ZNNN-01-G12-N	SF000004

OVERALL DIMENSIONS

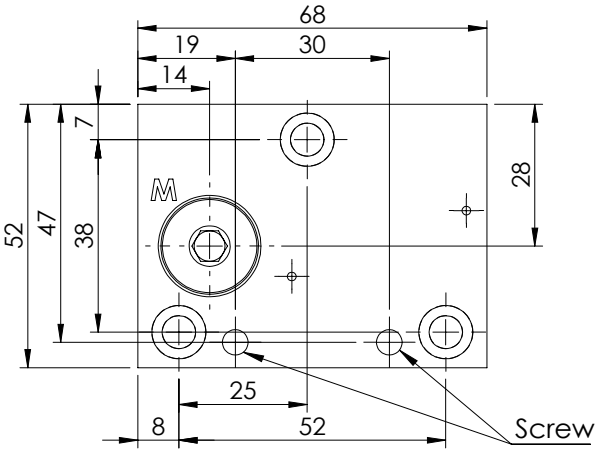

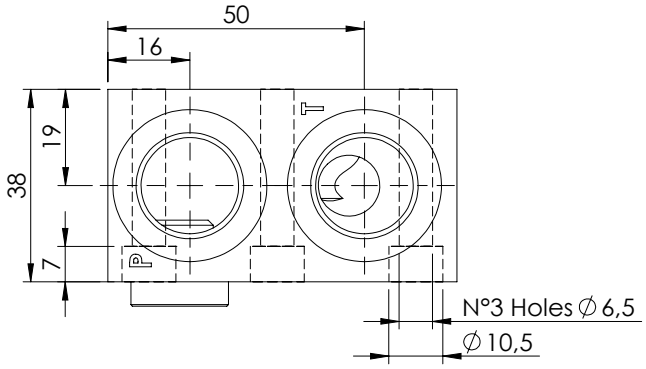

EBN series - INLET SECTION

SFNL-060-ZNNN-02

CHECK VALVE OPTIONS

ATLANTIC Fluid Tech

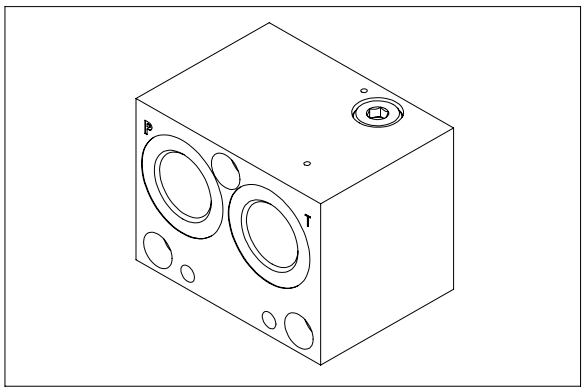

This inlet section is equipped with threaded ports (P, T) available in two different sizes G 1/2" or 3/4"-16 UNF, M ports is not available in this inlet section. The ports have extra threads to allow the installation of check valve on P and T ports.
The manifold material is aluminium for applications up to 210 bar or zinc plated steel for applications up to 320 bar.

TECHNICAL DATA

Max pressure	210/320 bar
Rated flow	60 l/min
Hydraulic fluid	Mineral oil DIN 51524
Fluid viscosity	10-500 mm²/s
Fluid temperature	-25°C/75°C
Enviroment temperature	-25°C/60°C
Weight	0,4 Kg

HYDRAULIC SCHEME

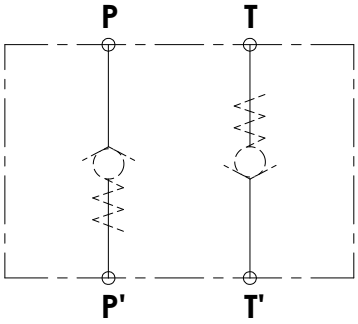

PRESSURE DROP

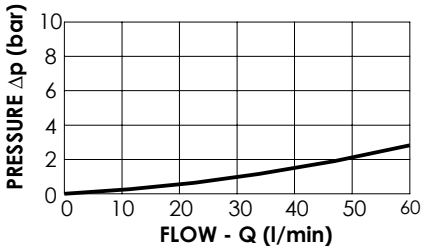

ORDERING DETAILS: SEPARATE ELEMENTS

SFNL-060-[*]NN[*]-02-[***]-N

*	MATERIAL TYPE
A	Steel zinc-plated (320 bar)
Z	Aluminium anodized (210 bar)

*	CHECK VALVE OPTION
N	No check valve
D	Check valve on P e T ports
P	Check valve only P port
T	Check valve only T port

***	PORTS		
	P line	**T** line	**M**
G12	G 1/2"	G 1/2"	/
U34	3/4"-16 UNF	3/4"-16 UNF	/

QUICK CODE	
DESCRIPTION	CODE
SFNL-060-ZNNN-02-G12-N	SF000008
Check valve on P	CD000181
Check valve on T	CD000175

OVERALL DIMENSIONS

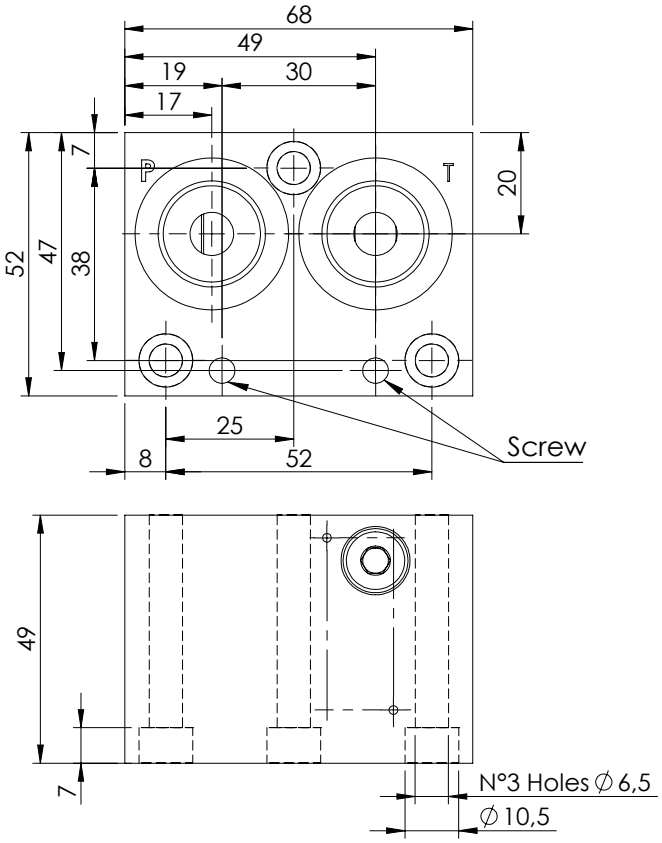

EBN series - INLET SECTION

SFNL-060-ZNNN-03

RELIEF VALVE
M PORT

ATLANTIC Fluid Tech

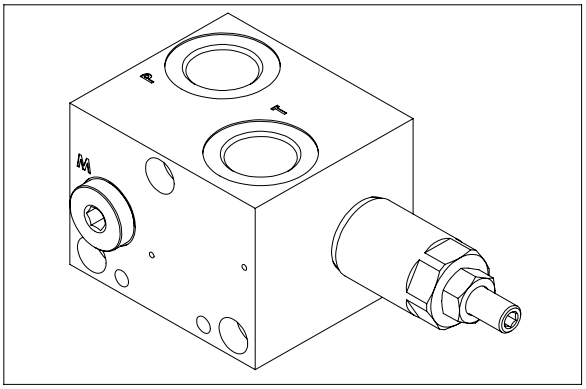

This inlet section is equipped with threaded ports (P, T) available in two different sizes G 1/2" or 3/4"-16 UNF, an M ports is available in sizes G 1/4" or 9/16-18 UNF.
It is also present a with relief valve with adjustable setting, the adjustment is made by socket screw; the max flow on the relief valve is 30 l/min.
The manifold material is aluminium for applications up to 210 bar or zinc plated steel for applications up to 320 bar.

TECHNICAL DATA

Max pressure	210/320 bar
Rated flow	60 l/min
Hydraulic fluid	Mineral oil DIN 51524
Fluid viscosity	10-500 mm²/s
Fluid temperature	-25°C/75°C
Enviroment temperature	-25°C/60°C
Weight	0,6 Kg

HYDRAULIC SCHEME

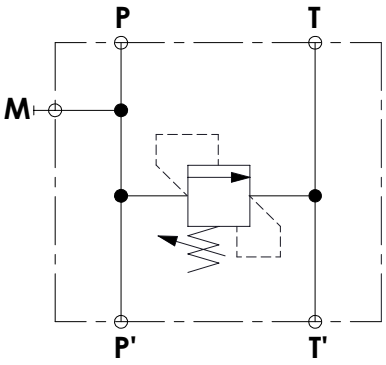

PRESSURE DROP

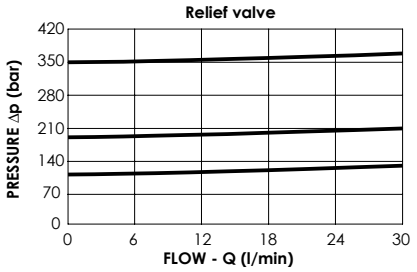

ORDERING DETAILS: SEPARATE ELEMENTS

SFNL-060-[*]N[*][*]-03-[***]-N

*	MATERIAL TYPE
A	Steel zinc-plated (320 bar)
Z	Aluminium anodized (210 bar)

*	SETTING RANGE
N	Max setting 210 bar (CP000083)
A	Max setting 110 bar (CP000084)
B	Max setting 350 bar (CP000082)

*	ADJUSTMENT OPTION
N	Screw adjustment
V	Knob adjustment

***	PORTS		
	P line	**T** line	**M**
G12	G 1/2"	G 1/2"	G 1/4"
U34	3/4"-16 UNF	3/4"-16 UNF	7/16"-20 UNF

QUICK CODE	
DESCRIPTION	CODE
SFNL-060-ZNNN-03-G12-N	SF000003

OVERALL DIMENSIONS

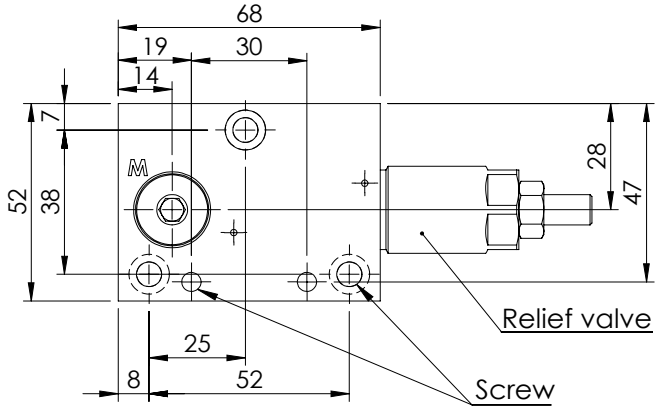

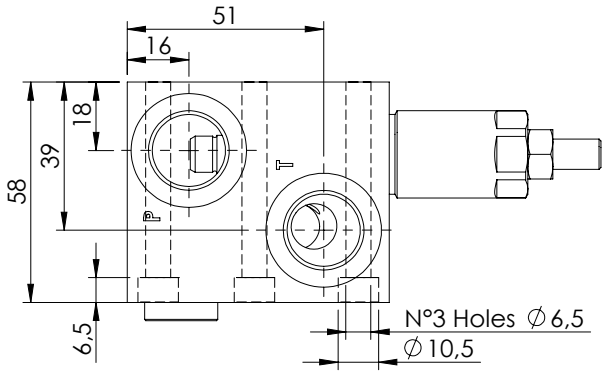

EBN series - INLET SECTION

SFNL-060-ZNNN-05

RELIEF VALVE UNLODING VALVE

ATLANTIC Fluid Tech

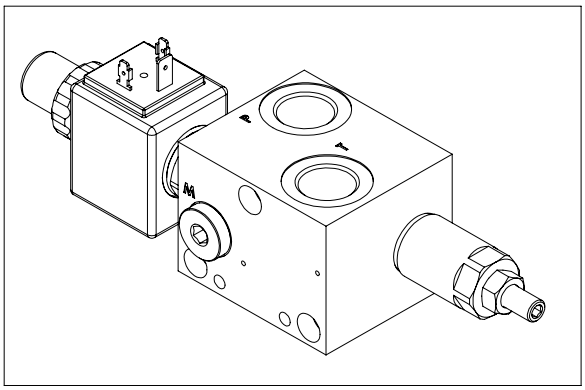

This inlet section is equipped with threaded ports (P, T) available in two different sizes G 1/2" or 3/4"-16 UNF, an M ports is available in sizes G 1/4" or 9/16-18 UNF.
A with relief valve with adjustable setting protect from peak pressure; the max flow on the relief valve is 30 l/min.
A solenoid valve normally open allow to unload the system and is equipped with manual override, max flow on the solenoid valve is 40 l/min.
The manifold material is aluminium for applications up to 210 bar or zinc plated steel for applications up to 320 bar.

TECHNICAL DATA

Max pressure	210/320 bar
Rated flow	60 l/min
Hydraulic fluid	Mineral oil DIN 51524
Fluid viscosity	10-500 mm²/s
Fluid temperature	-25°C/75°C
Enviroment temperature	-25°C/60°C
Weight	0,75 Kg

HYDRAULIC SCHEME

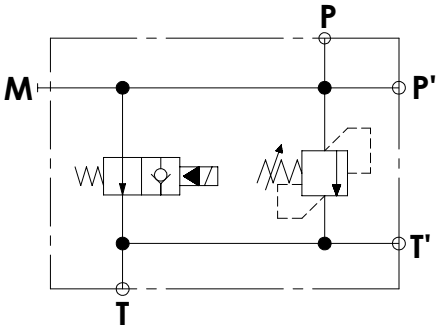

PRESSURE DROP

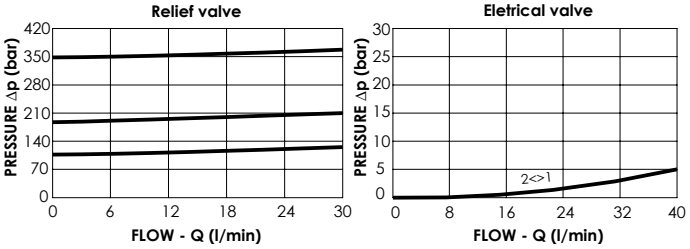

ORDERING DETAILS: SEPARATE ELEMENTS

SFNL-060-*N-05-***-***N**

*	MATERIAL TYPE
A	Steel zinc-plated (310 bar)
Z	Aluminium anodized (210 bar)

*	SETTING RANGE
N	Max setting 210 bar (CP000083)
A	Max setting 110 bar (CP000084)
B	Max setting 350 bar (CP000082)

*	ADJUSTMENT OPTION
N	Screw adjustment
V	Knob adjustment

***	PORTS		
	P line	**T** line	**M**
G12	G 1/2"	G 1/2"	G 1/4"
U34	3/4"-16 UNF	3/4"-16 UNF	7/16"-20 UNF

*	VOLTAGE
	no coils
A	12 V dc
B	24 V dc

**	COILS TYPE
	no coils
HR	Hirschmann (ISO 4400 DIN 43650)
DT	Deutsch (DT04-2P)
AJ	Amp junior (AJ type)

QUICK CODE	
DESCRIPTION	CODE
SFNL-060-ZNNN-05-G12-N	SF000002
Unloading valve	CE000868

OVERALL DIMENSIONS

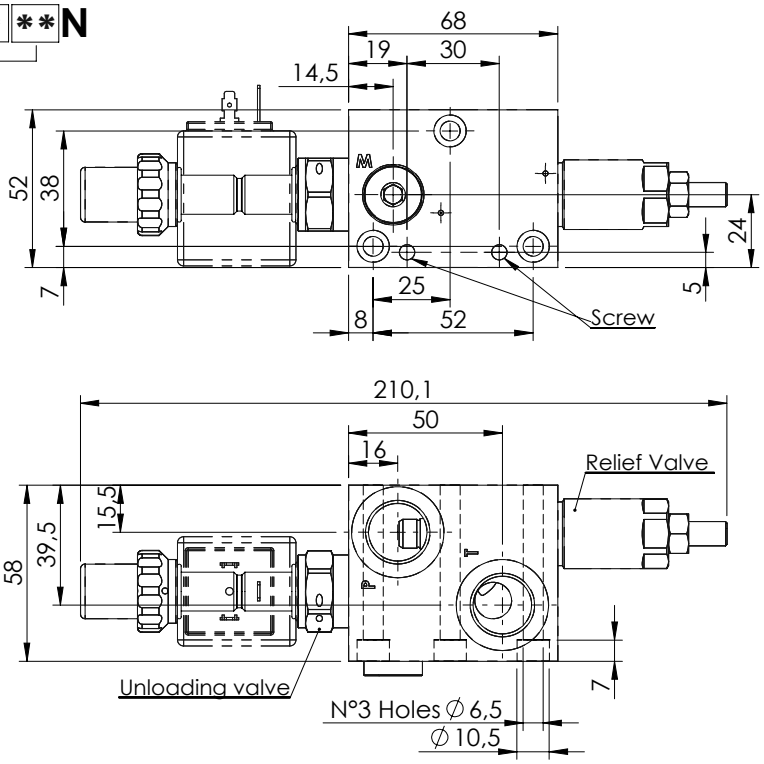

EBN series - INLET SECTION

SFNL-060-ZDNN-07

PROPORTIONAL COMPENSATED FLOW REGULATOR

ATLANTIC Fluid Tech

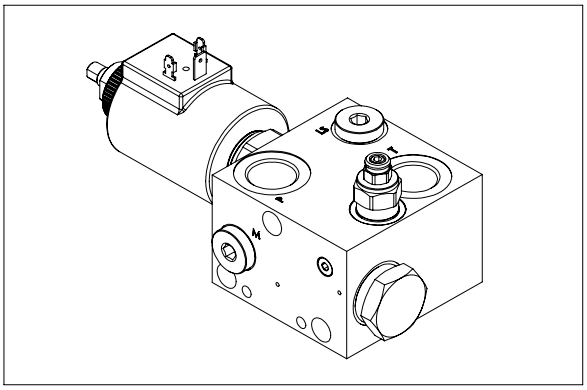

This inlet section is equipped with threaded ports (P, T) available in two different sizes G 1/2" or 3/4"-16 UNF, an M ports is available in sizes G 1/4" or 9/16-18 UNF; an LS port allows to measure of the load pressure.
A proportional flow regulator with external flow compensator controls the metering, the maximum flow is 40 l/min; when not energized the compensator is unloading the flow.
A relief valve with adjustable setting protect from peak of pressure.
The manifold material is aluminium for applications up to 210 bar or zinc plated steel for applications up to 320 bar.

TECHNICAL DATA

Max pressure	210/320 bar
Rated flow	60 l/min
Hydraulic fluid	Mineral oil DIN 51524
Fluid viscosity	10-500 mm²/s
Fluid temperature	-25°C/75°C
Enviroment temperature	-25°C/60°C
Weight	0,75 Kg

HYDRAULIC SCHEME

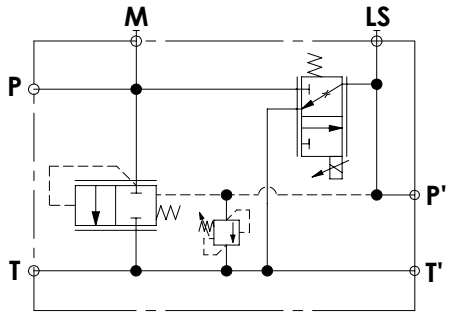

PROPORTIONAL FLOW REGULATOR CURVES

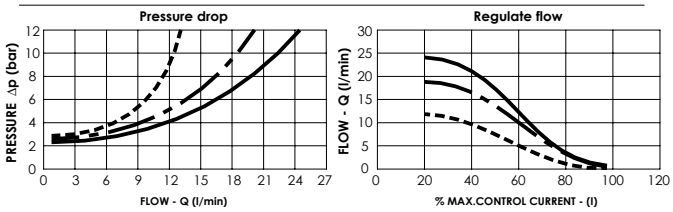

ORDERING DETAILS: SEPARATE ELEMENTS

SFNL-060-[*]D[*][*]-07-[***]-[*][**]N

*	MATERIAL TYPE
A	Steel zinc-plated (320 bar)
Z	Aluminium anodized (210 bar)

*	REALIF VALVE SETTING
N	Max setting 210 bar (CP000029)
A	Max setting 110 bar (CP000030)
B	Max setting 350 bar (CP000002)

*	ADJUSTMENT FLOW
N	30 l/min (CE000112)
A	20 l/min (CE000113)
B	10 l/min (CE000111)

***	PORTS		
	P line	**T** line	**M**
G12	G 1/2"	G 1/2"	G 1/4"
U34	3/4"-16 UNF	3/4"-16 UNF	7/16"-20 UNF

*	VOLTAGE
	no coils
A	12 V dc
B	24 V dc

**	COILS TYPE
	no coils
HR	Hirschmann (ISO 4400 DIN 43650)
DT	Deutsch (DT04-2P)
AJ	Amp junior (AJ type)

QUICK CODE	
DESCRIPTION	CODE
SFNL-060-ZNNN-05-G12-N	SF000001

OVERALL DIMENSIONS

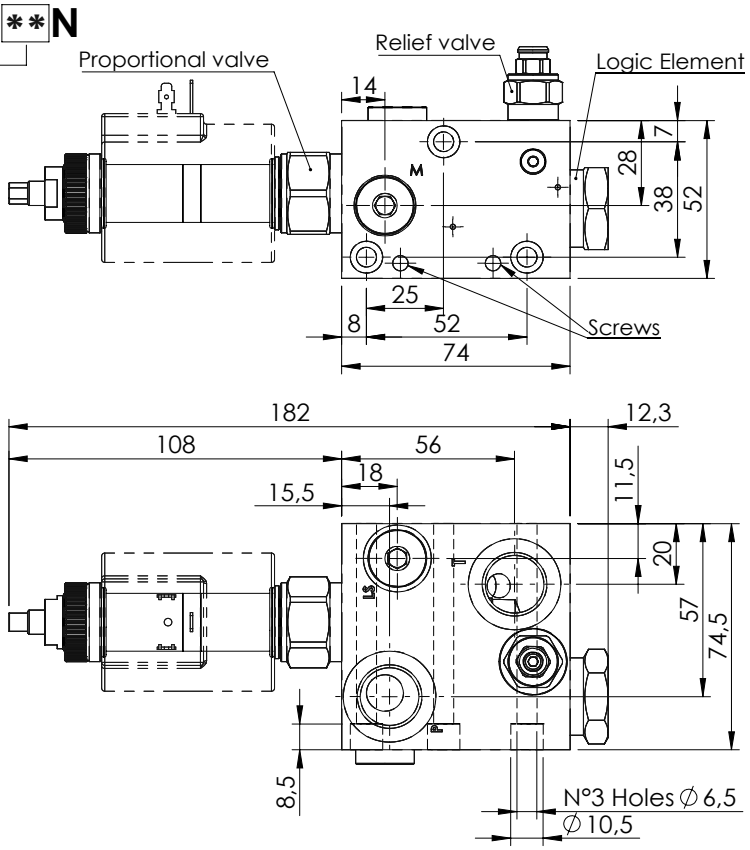

EBN series - MONOBLOCK

LDNP-060-NNNN

CAST-IRON MANIFOLD

ATLANTIC Fluid Tech

In LDNS/P-030-C plug are included in the manifold

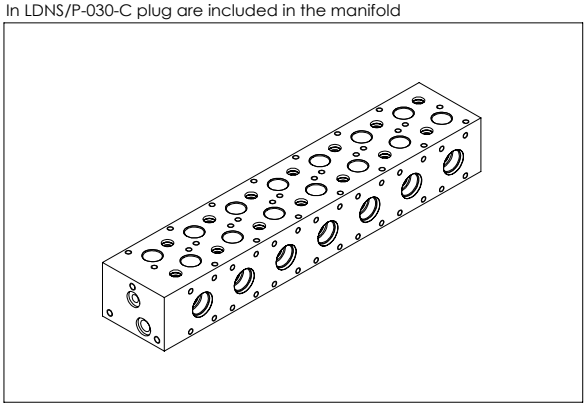

The monoblock valve can be ordered with a number of spool's section from 1 to 7, each section is equipped with side monting holes for lever option and with treaded holes at the top for flangeable modular valve. There are also two removable plugs connecting to a T line to allow to flange special blocks.
The standard version has G 3/8" ports and can be supplied with top blocks with 9/16"-18 UNF (SAE6) or M16x1,5.
The manifold it is made with cast-iron and protected from corrosion with zinc-plating surface treatment.
The inlet face has 3 threaded holes to flange an inlet block that can be customized for each application, giving high flexibility to the project.

TECHNICAL DATA

Max pressure	320 bar
Rated flow	60 l/min
Material	Cast-iron
Surface treatment	Zinc-plated black
Weight for single section	1,6 kg
Wight for additional sections	+ 1 Kg each

ORDERING DETAILS: SEPARATE ELEMENTS

LDN [*] -060-NNNN- [**] - [***]

*	TYPE OF MANIFOLD
S	Series connection
P	Parallel connection

**	NUMBER OF SECTION
01	manifold with one section
02	manifold with two sections
03	manifold with three sections
04	manifold with four sections
05	manifold with five sections
06	manifold with six sections
07	manifold with seven sections

***	PORTS		
	P line	**T** line	**M**
G38	G 3/8"	G 3/8"	G 1/4"
U09	9/16"-18 UNF	9/16"-18 UNF	7/16"-20 UNF

QUICK CODE	
DESCRIPTION	CODE
LDNP-060-NNNN-01-G38	LD000156
LDNP-060-NNNN-02-G38	LD000155
LDNP-060-NNNN-03-G38	LD000147
LDNP-060-NNNN-04-G38	LD000146
LDNP-060-NNNN-05-G38	LD000154
LDNP-060-NNNN-06-G38	LD000153
LDNP-060-NNNN-07-G38	LD000157

MANIFOLD CONFIGURATIONS

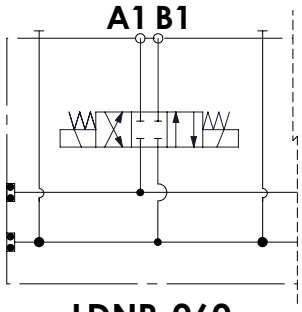

LDNP-060

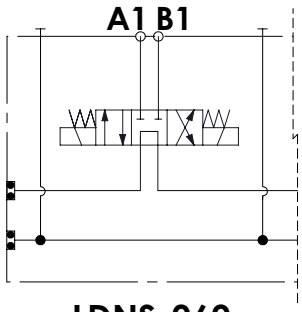

LDNS-060

MONOBLOCK PRESSURE DROP

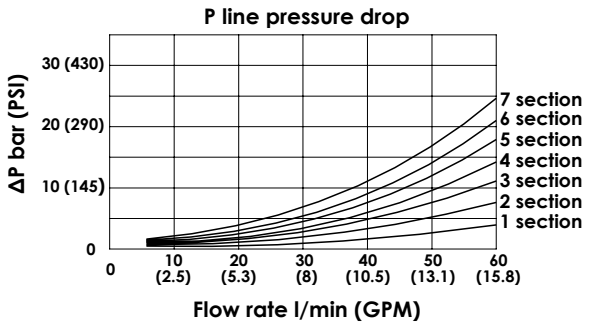

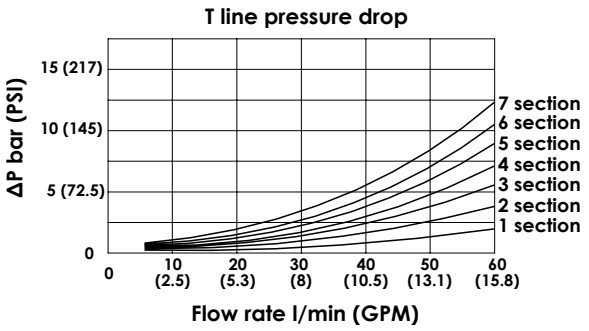

EBN series - MONOBLOCK

LDNS-060-NNNN

CAST-IRON MANIFOLD

ATLANTIC Fluid Tech

GAS VERSION

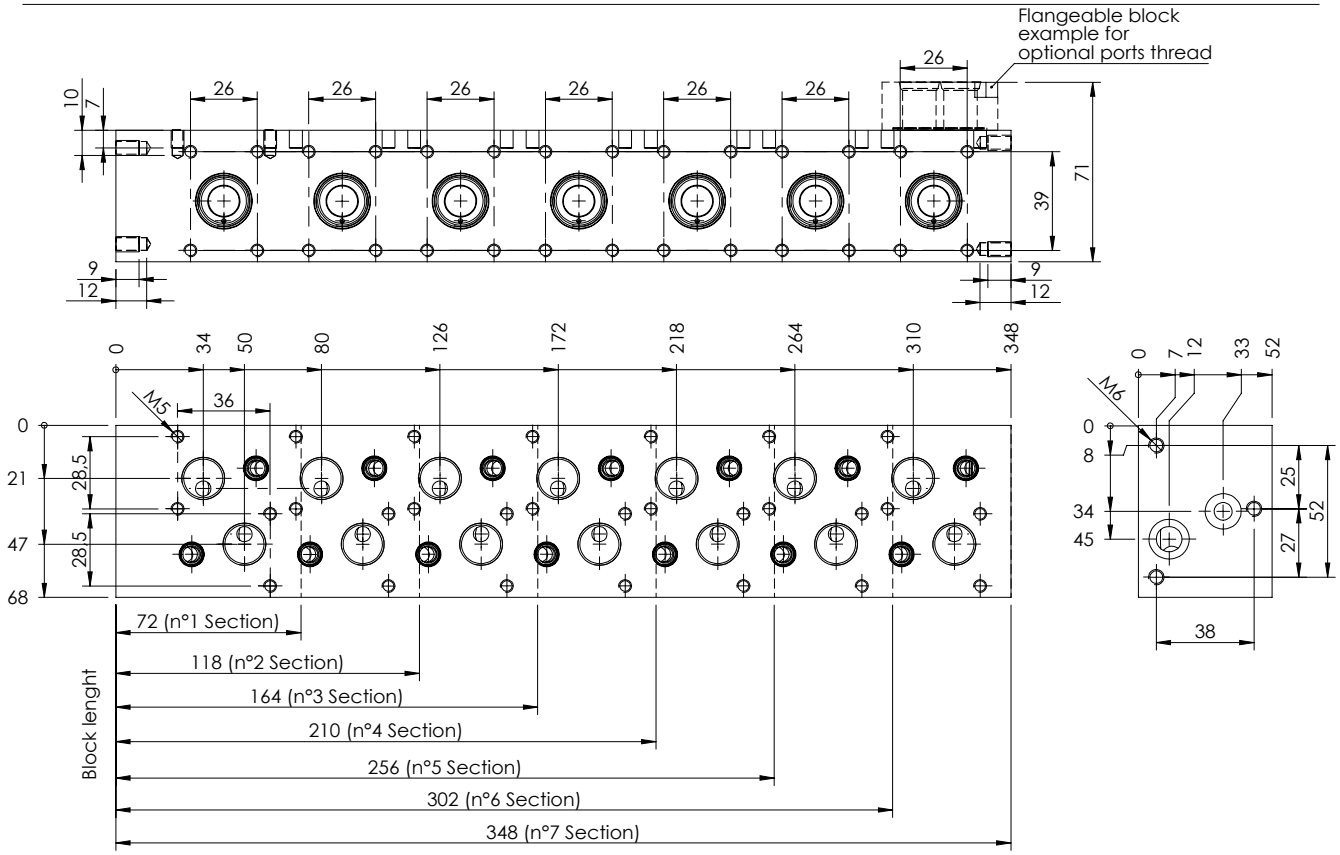

SAE VERSION

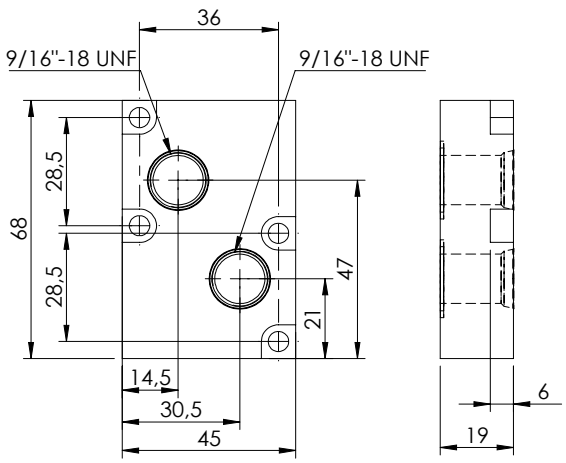

This top flangeable block transform the monoblock to a UNF version.

Quick code: MP000096

METRIC VERSION

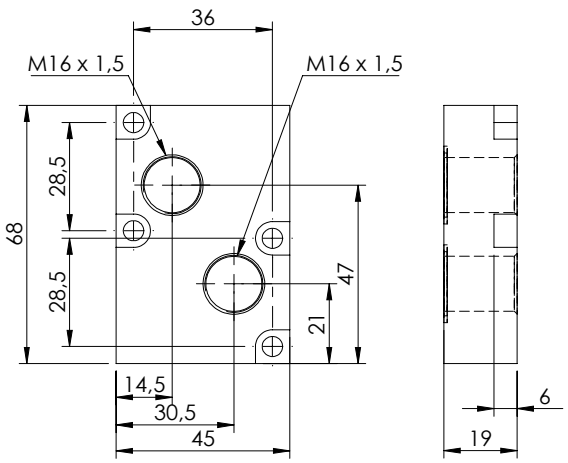

This top flangeable block transform the monoblock to a Metric version.

Quick code: MP000097

EBN series - SPOOL SECTION

SHNE-030-NNON

30 L/MIN SOLENOID VALVE

ATLANTIC Fluid Tech

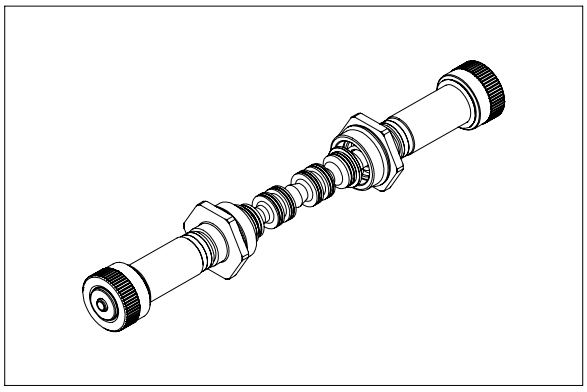

This spool group is rated for 30 lpm and for a maximum pressure of 320 bar; the spool is actuated by on off tubes and can be ordered with different hydraulic schemes.
Each spools is interchangeable to give maximum flexibility and can be fit in all monoblock sections, changing spools require adequate training.
The group is made by two tubes, one spool, two springs and mounting components.

TECHNICAL DATA

Max pressure	320 bar
Rated flow	30 l/min
Duty cycle	100 % ED
Hydraulic fluid	Mineral oil DIN 51524
Fluid viscosity	10/500 mm²/s
Fluid temperature	-25°C/75°C
Enviroment temperature	-25°C/60°C
Weight with one solenoid	0,15 Kg
Weight with two solenoid	0,12 kg

ORDERING DETAILS: SEPARATE ELEMENTS

SH[*][*] - 030 - NN[**] - [**] - 321 - [*][**]N

*	OVERRIDE TYPE
N	Standard
P	Push
V	Screw

*	SECTION TYPE
E	Solenoid operated
L	Solenoid operated plus lever operated
M	Lever operated

**	ACTUATION TYPE
ON	On/Off
SS	Soft shift

**	SPOOL TYPE
...	See table n°1

*	VOLTAGE
	no coils
A	12 V dc
B	24 V dc

**	COILS TYPE
	no coils
HR	Hirschmann (ISO 4400 DIN 43650)
DT	Deutsch (DT04-2P)
AJ	Amp junior (AJ type)

QUICK CODE	
DESCRIPTION	CODE
SHNE-030-NNON-46-321	
SHNE-030-NNON-10-321	
SHNE-030-NNON-07-321	

HYDRAULIC SYMBOLS

Table n°1

SPOOL CODE	HYDRAULIC SCHEME	TRANSITORY POSITION
46	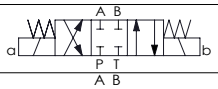	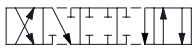
10	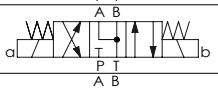	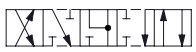
07	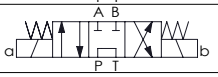	

SPOOL CODE		HYDRAULIC SCHEME		TRANSITORY POSITION	
a	**b**	**a**	**b**	**a**	**b**
23		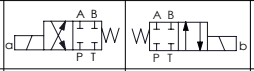		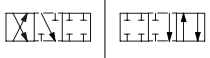	
21		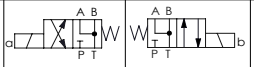			
22		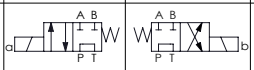			
17		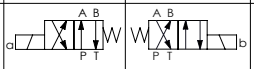		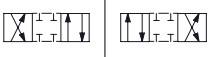	
18		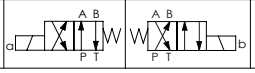		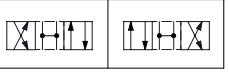	

OVERRIDE TYPE

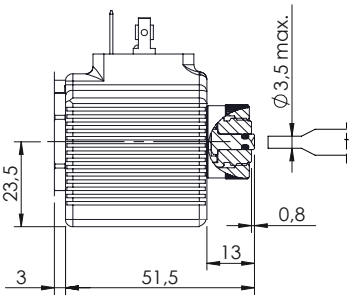

OVERRIDE TYPE "N"

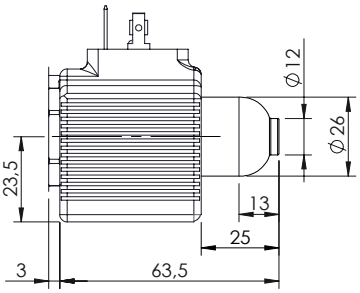

OVERRIDE TYPE "P"

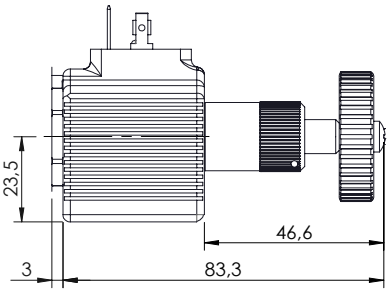

OVERRIDE TYPE "V"

SHNE-030-NNON

30 L/MIN SOLENOID VALVE

ATLANTIC Fluid Tech

PERFORMANCE LIMITS CURVES - STANDARD SECTION

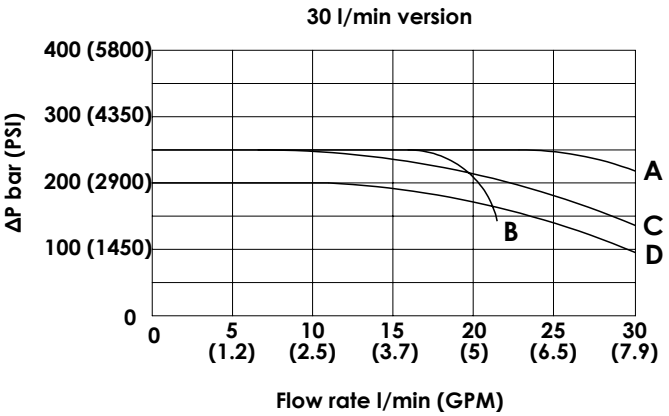

Spool type	Performance limits curve
46	A
10	A
07	B
23	A
21	A
22	A
17	C
18	D

The tests are carried out with hot solenoids , powered with 90 % of nominal voltage, with 50 ° C fluid temperature.
The fluid used is mineral oil having a viscosity of 46 mm² / s @ 40 ° C .
The values in the diagram refer to tests carried out with flow simultaneously in both directions (P > A, B > T).
In cases of schemes 4/2 or 4/3 used with the flow in one direction only the performance can change.

PRESSURE DROP CURVES - STANDARD SECTION

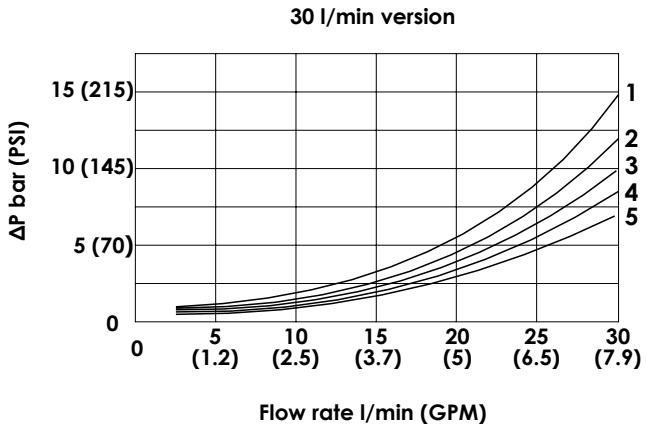

Spool type	Pressure drop curve				
	P>A	P>B	A>T	B>T	P>T
46	3	3	4	4	/
10	3	3	5	5	/
07	2	2	1	1	2
23	/	3	4	/	/
21	/	3	5	/	/
22	2	/	/	1	/
17	/	3	4	/	/
18	/	2	3	/	/

The diagram shows the performance limit curve of standard section. The fluid used is mineral oil viscosity 46 mm²/s at 40 °C ; the tests are performed at a 40 °C temperature

OVERALL DIMENSION - STANDARD SECTION

In case of top modular valve MA or MC type installation the coil connection can be faced to the top or to the bottom of the block. (See modular valve section)

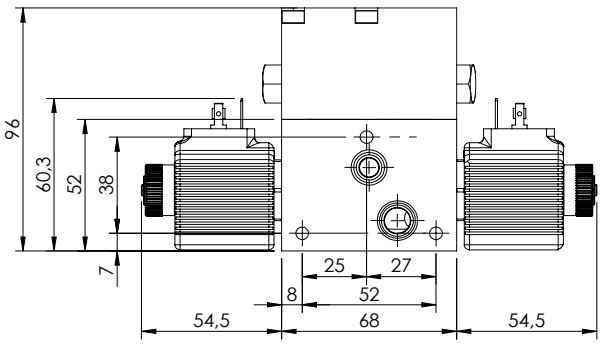

In case of top modular valve MB, KE and KF type installation the coil connection can be faced only to the bottom of the block. (See modular valve section)

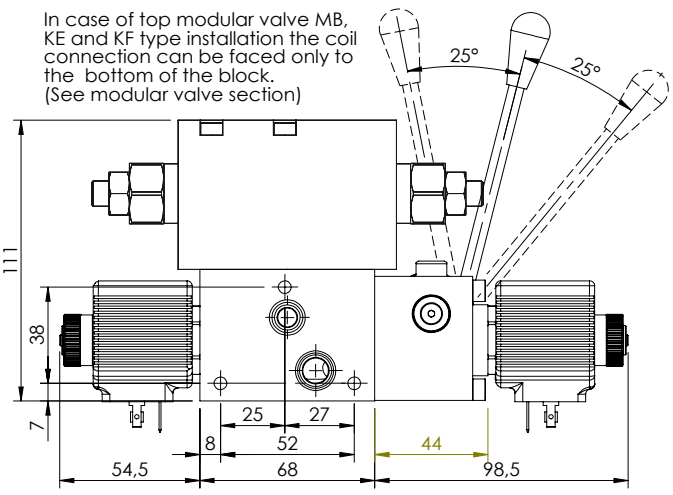

EBN series - SPOOL SECTION

SHNE-060-NNON

60 L/MIN SOLENOID VALVE

ATLANTIC Fluid Tech

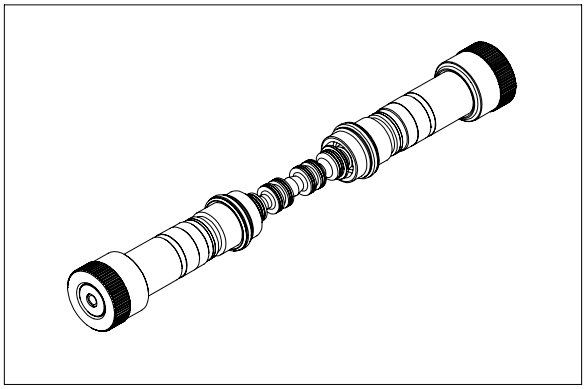

This spool group is rated for 60 lpm and for a maximum pressure of 320 bar; the spool is actuated by on off tubes and can be ordered with different hydraulic schemes.
Each spools is interchangeable to give maximum flexibility and can be fit in all monoblock sections, changing spools require adequate training.
The group is made by two tubes, one spool, two springs and mounting components.

TECHNICAL DATA

Max pressure	320 bar
Rated flow	60 l/min
Duty cycle	100 % ED
Hydraulic fluid	Mineral oil DIN 51524
Fluid viscosity	10/500 mm²/s
Fluid temperature	-25°C/75°C
Enviroment temperature	-25°C/60°C
Weight with one solenoid	0,2 Kg
Weight with two solenoid	0,4 kg

ORDERING DETAILS: SEPARATE ELEMENTS

SH * * - 060 - NN ** - ** -321- * ** N

*	OVERRIDE TYPE
N	Standard
P	Push
V	Screw

*	SECTION TYPE
E	Solenoid operated
L	Solenoid operated plus lever operated
M	Lever operated

**	ACTUATION TYPE
ON	On/Off
SS	Soft shift

**	SPOOL TYPE
...	See table n°1

*	VOLTAGE
	no coils
A	12 V dc
B	24 V dc

**	COILS TYPE
	no coils
HR	Hirschmann (ISO 4400 DIN 43650)
DT	Deutsch (DT04-2P)
AJ	Amp junior (AJ type)

QUICK CODE	
DESCRIPTION	CODE
SHNE-060-NNON-46-321	
SHNE-060-NNON-10-321	
SHNE-060-NNON-07-321	

HYDRAULIC SYMBOLS

Table n°1

SPOOL CODE	HYDRAULIC SCHEME	TRANSITORY POSITION
46	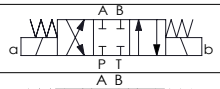	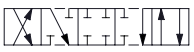
10	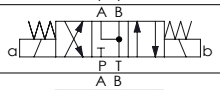	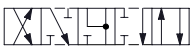
07	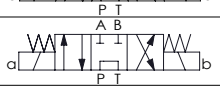	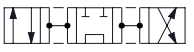

SPOOL CODE		HYDRAULIC SCHEME		TRANSITORY POSITION	
a	**b**	**a**	**b**	**a**	**b**
23		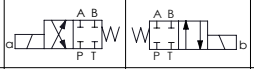		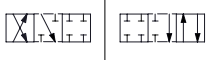	
21		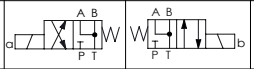			
22		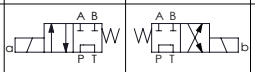		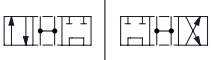	
17		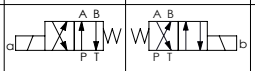		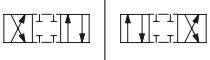	
18		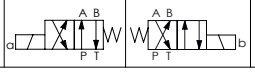		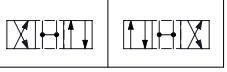	

OVERRIDE TYPE

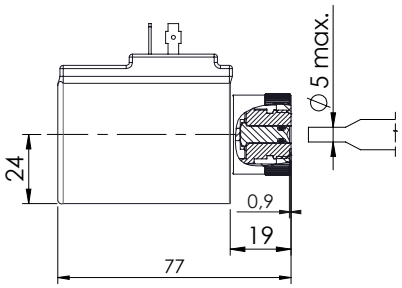

OVERRIDE TYPE "N"

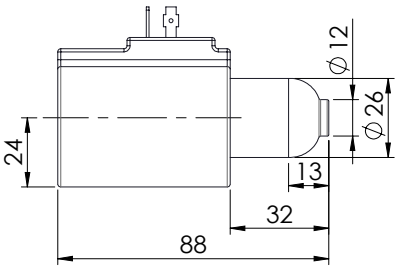

OVERRIDE TYPE "P"

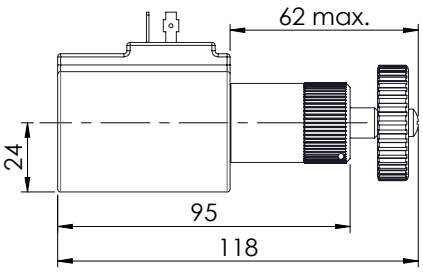

OVERRIDE TYPE "V"

SHNE-060-NNON

60 L/MIN SOLENOID VALVE

ATLANTIC Fluid Tech

PERFORMANCE LIMIT CURVES - STANDARD SECTION

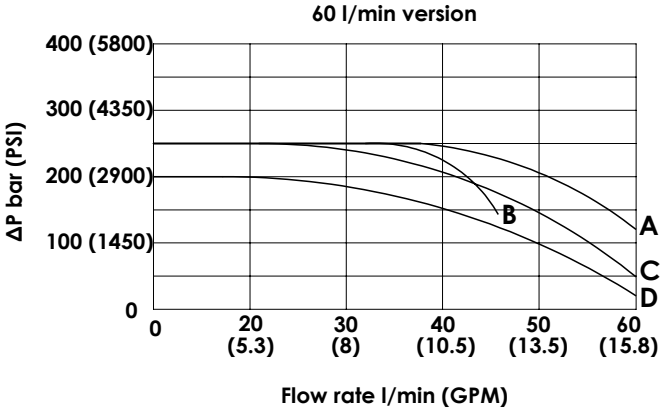

Spool type	Performance limits curve
46	A
10	A
07	B
23	A
21	A
22	A
17	C
18	D

The tests are carried out with hot solenoids , powered with 90 % of nominal voltage, with 50 ° C fluid temperature.
The fluid used is mineral oil having a viscosity of 46 mm² / s @ 40 ° C .
The values in the diagram refer to tests carried out with flow simultaneously in both directions (P > A, B > T).
In cases of schemes 4/2 or 4/3 used with the flow in one direction only the performance can change.

PRESSURE DROP CURVES - STANDARD SECTION

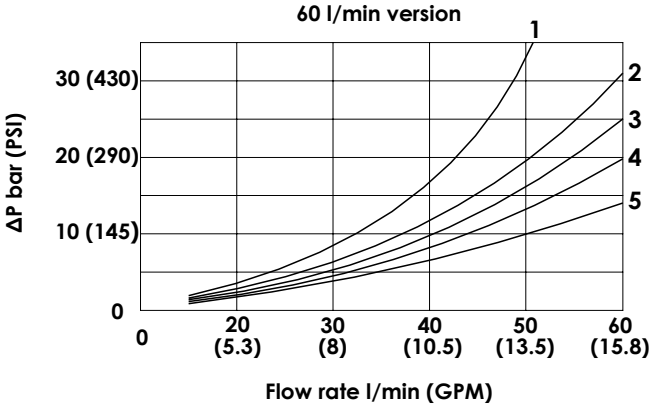

Spool type	Pressure drop curve				
	P>A	P>B	A>T	B>T	P>T
46	3	3	4	4	/
10	3	3	5	5	/
07	2	2	1	1	2
23	/	3	4	/	/
21	/	3	5	/	/
22	2	/	/	1	/
17	/	3	4	/	/
18	/	2	3	/	/

The diagram shows the performance limit curve of standard section. The fluid used is mineral oil viscosity 46 mm²/s at 40 °C ; the tests are performed at a 40 °C temperature

OVERALL DIMENSION - STANDARD SECTION

In case of top modular valve MA or MC type installation the coil connection can be faced to the top or to the bottom of the block. (See modular valve section)

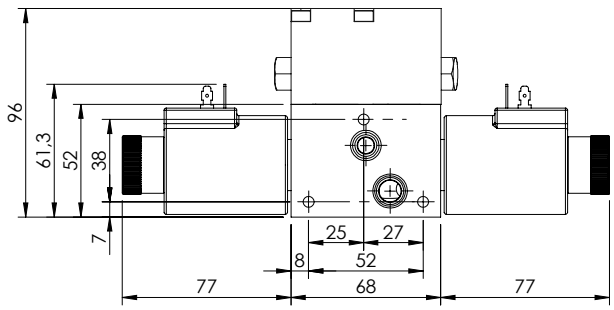

In case of top modular valve MB, KE and KF type installation the coil connection can be faced only to the bottom of the block. (See modular valve section)

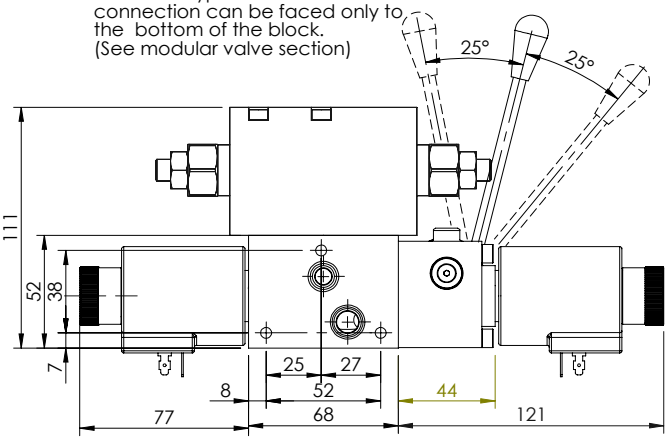

EBN series - SPOOL SECTION

SHNE-050-NNPR

50 L/MIN PROPORTIONAL SOLENOID VALVE

ATLANTIC Fluid Tech

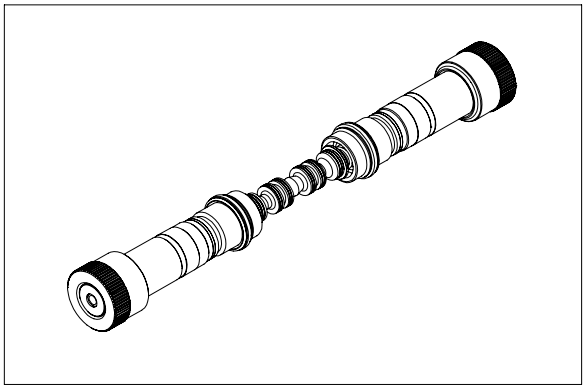

This spool group is rated for 50 lpm and for a maximum pressure of 320 bar; the spool is actuated by proportional tubes and can be ordered with different hydraulic schemes. Each spools is interchangeable to give maximum flexibility and can be fit in all monoblock sections, changing spools require adequate training.
The group is made by two tubes, one spool, two springs and mounting components.

TECHNICAL DATA

Max pressure	320 bar
Rated flow	50 l/min
Duty cycle	100 % ED
Max current	1.76A(12 V dc) 0.88A (24 V dc)
Hydraulic fluid	Mineral oil DIN 51524
Fluid viscosity	10/500 mm
Fluid temperature	-25°C/75°C
Enviroment temperature	-25°C/60°C
Weight with one solenoid	0,2 Kg
Weight with two solenoid	0,4 kg

ORDERING DETAILS: SEPARATE ELEMENTS

SH[*][*]-0[**]-NNPR-[**]-321-[*][**]N

*	OVERRIDE TYPE
N	Standard
P	Push
V	Screw

*	SECTION TYPE
E	Solenoid operated
L	Solenoid operated plus lever operated
M	Lever operated

*	SPOOL FLOW
20	20 l/min at 12 bar - 10 l/min at 6 bar
35	35 l/min at 12 bar - 20 l/min at 6 bar
50	50 l/min at 12 bar - 30 l/min at 6 bar

**	
...	See table n°1

*	VOLTAGE
	no coils
A	12 V dc
B	24 V dc

**	COILS TYPE
	no coils
HR	Hirschmann (ISO 4400 DIN 43650)
DT	Deutsch (DT04-2P)
AJ	Amp junior (AJ type)

QUICK CODE	
DESCRIPTION	CODE
SHNE-030-NNPR-59-321	
SHNE-030-NNPR-55-321	

HYDRAULIC SYMBOLS

Table n°1

SPOOL CODE	HYDRAULIC SCHEME	TRANSITORY POSITION
59	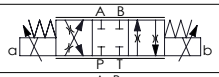	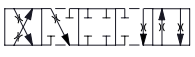
55	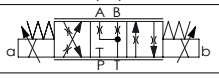	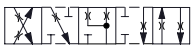

SPOOL CODE		HYDRAULIC SCHEME		TRANSITORY POSITION	
a	**b**	**a**	**b**	**a**	**b**

For single solenoid operation please contact AFT sales network.

OVERRIDE TYPE

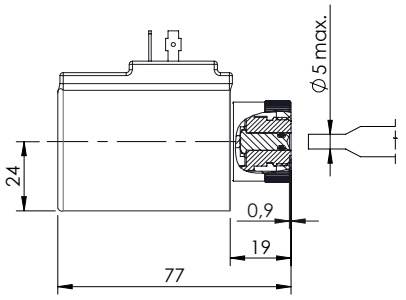

OVERRIDE TYPE "N"

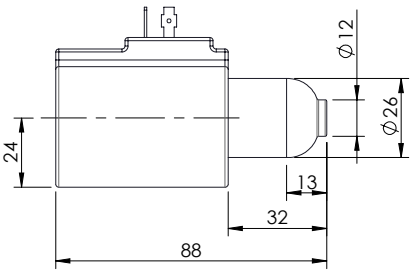

OVERRIDE TYPE "P"

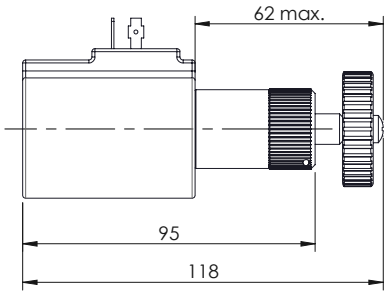

OVERRIDE TYPE "V"

EBN series - SPOOL SECTION

SHNE-050-NNPR

50 L/MIN PROPORTIONAL SOLENOID VALVE

ATLANTIC Fluid Tech

FLOW DIAGRAM - 050

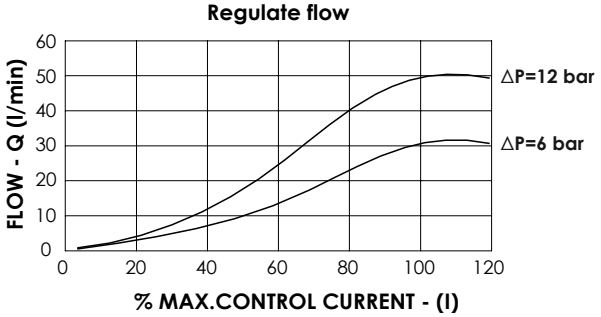

REGULATION DIAGRAM - 050

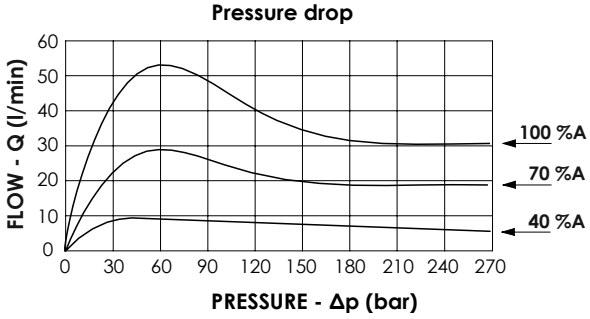

FLOW DIAGRAM - 035

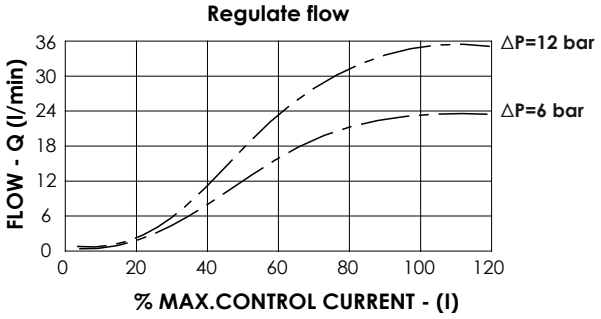

REGULATION DIAGRAM - 035

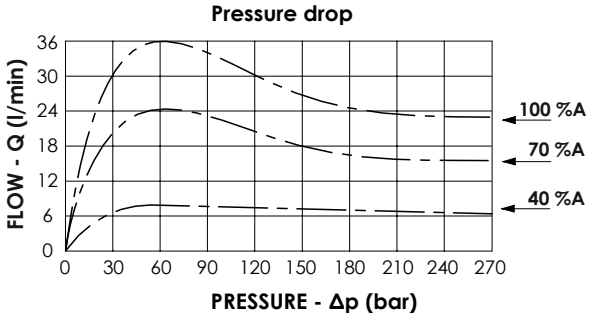

FLOW DIAGRAM - 020

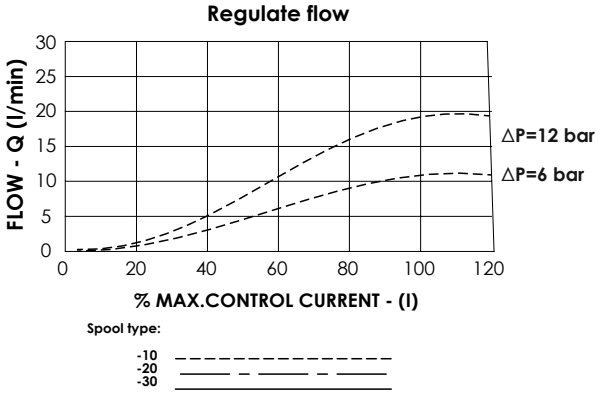

REGULATION DIAGRAM - 020

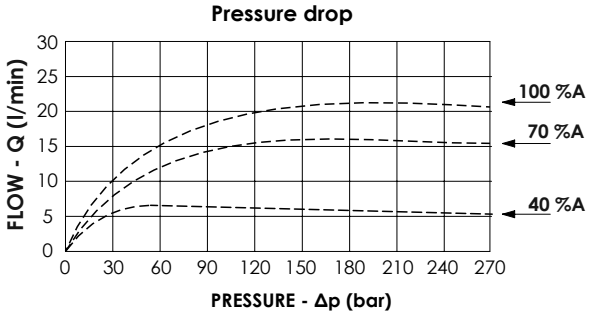

The diagram shows the performance limit curve of a standard section. The fluid used is mineral oil with viscosity of 46 mm²/s @ 40 °C ; the tests are performed at a 40 °C temperature.

OVERALL DIMENSION - STANDARD SECTION

In case of top modular valve MA or MC type installation the coil connection can be faced to the top or to the bottom of the block. (See modular valve section)

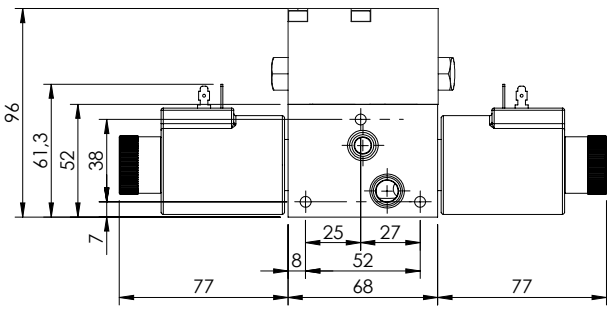

In case of top modular valve MB, KE and KF type installation the coil connection can be faced only to the bottom of the block. (See modular valve section)

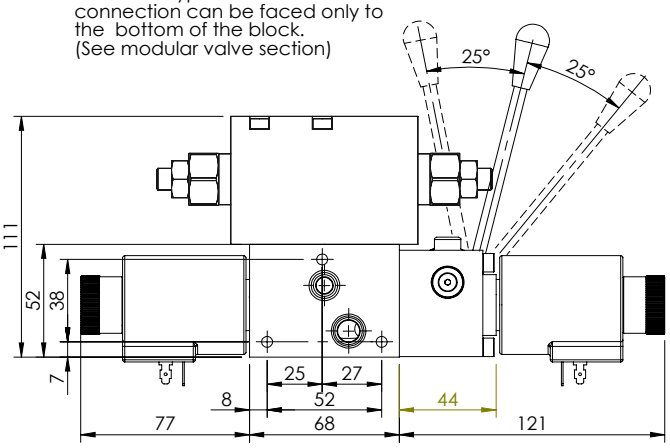

EBN series - SPOOL SECTION

SHNE-030-POPR

30 L/MIN
PROPORTIONAL FLOW
UNLOADING

ATLANTIC Fluid Tech

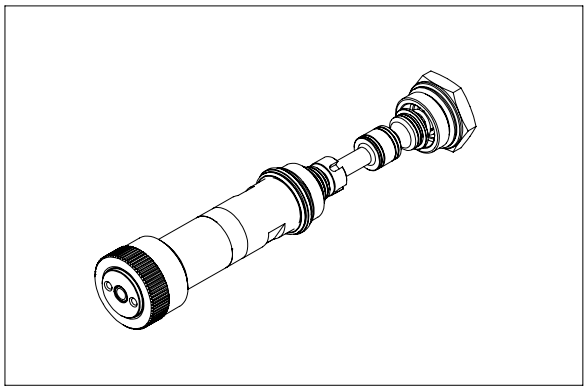

The solenoid valve can be ordered with 3 types of ports for connection nipples, G 3/8" 9/16"-18 UNF (SAE6) and M16x1, 5. Spool actuation is electrical and the center position is maintained through centering springs with calibrated length, upon termination of the solenoid action, springs immediately reposition the cursor in the central position.The solenoids are only available in the continues current (the most common strains); the coil will be supply with terminals DIN 43650 ISO 4400 (for stadard versions). The valve have cast iron body with black galvanizing surface treatment with sealant.

TECHNICAL DATA

Max pressure	320 bar
Rated flow	25 l/min
Duty cycle	100 % ED
Max current	1.76A(12 V dc) 0.88A (24 V dc)
Hydraulic fluid	Mineral oil DIN 51524
Fluid viscosity	10/500 mm
Fluid temperature	-25°C/75°C
Enviroment temperature	-25°C/60°C
Weight with one solenoid	2 Kg
Weight with two solenoid	2,5 kg

ORDERING DETAILS: SEPARATE ELEMENTS

SH-0**-POPR-**-321-***N**

*	OVERRIDE TYPE
N	Standard
P	Push
V	Screw

*	SECTION TYPE
E	Solenoid operated
L	Solenoid operated plus lever operated
M	Lever operated

**	SPOOL FLOW
10	12 l/min at 10 bar
20	18 l/min at 10 bar
30	25 l/min at 10 bar

**	PROPORTIONAL TYPE
88	Not compesated

*	VOLTAGE
	no coils
A	12 V dc
B	24 V dc

**	COILS TYPE
	no coils
HR	Hirschmann (ISO 4400 DIN 43650)
DT	Deutsch (DT04-2P)
AJ	Amp junior (AJ type)

QUICK CODE	
DESCRIPTION	CODE
SHNE-030-POPR-88-321	
SHNE-020-POPR-88-321	
SHNE-010-POPR-88-321	

TECHNICAL FEATURES

Spool Flow	Rated flow with 10 bar ΔP	Maximum flow	Max. operating pressure
10	10	12	320
20	16	18	320
30	23	28	320

HYDRAULIC SYMBOLS

Table n°1

SPOOL CODE	HYDRAULIC SCHEME	TRANSITORY POSITION
88	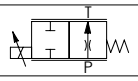	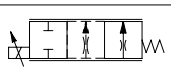

OVERRIDE TYPE

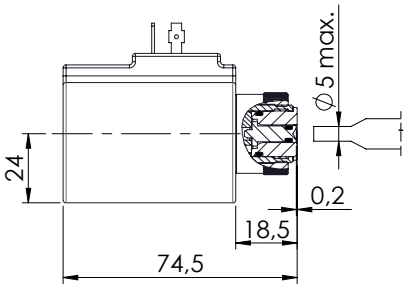

OVERRIDE TYPE "N"

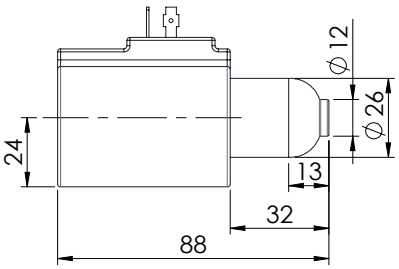

OVERRIDE TYPE "P"

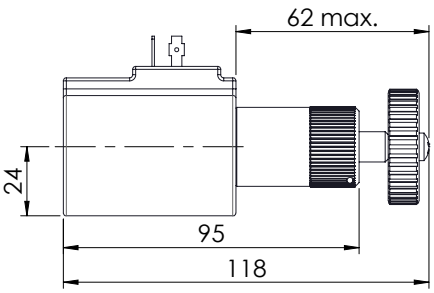

OVERRIDE TYPE "V"

EBN series - SPOOL SECTION

SHNE-030-PRPO

30 L/MIN
PROPORTIONAL FLOW
UNLOADING

ATLANTIC Fluid Tech

FLOW DIAGRAM - 030

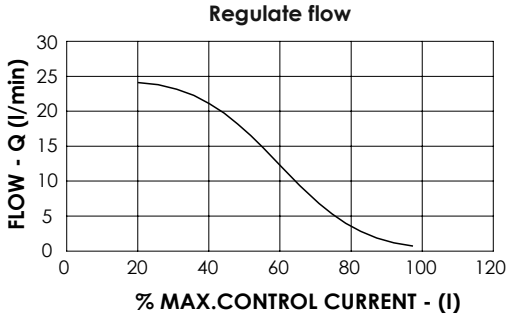

PRESSURE DROP DIAGRAM - 030

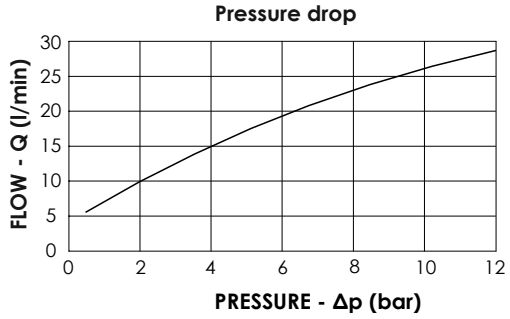

FLOW DIAGRAM - 020

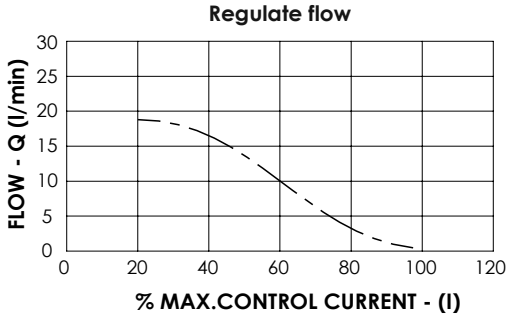

PRESSURE DROP DIAGRAM - 020

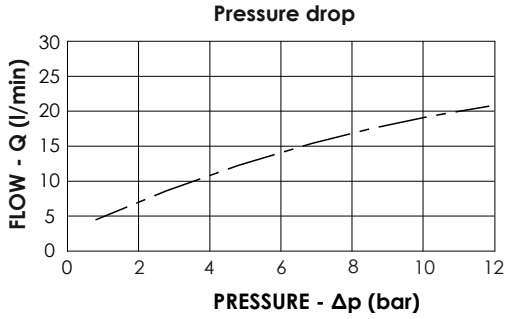

FLOW DIAGRAM - 010

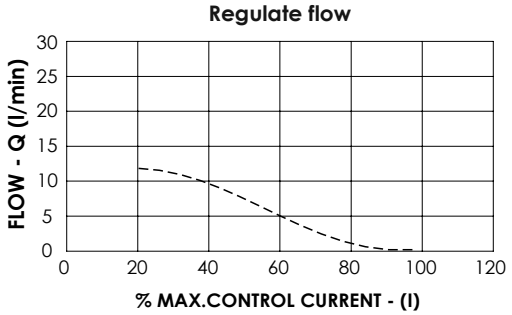

Spool type:

-10
-20
-30

PRESSURE DROP DIAGRAM - 010

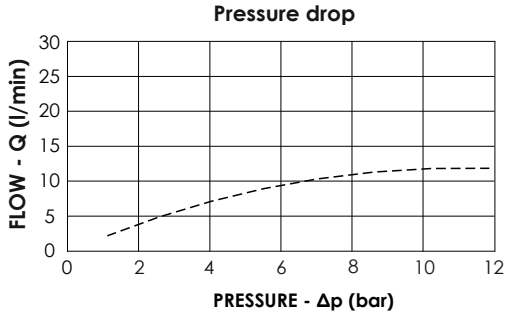

The diagram shows the performance limit curve of a standard section. The fluid used is mineral oil with viscosity of 46 mm²/s @ 40 °C ; the tests are performed at a 40 °C temperature.

OVERALL DIMENSION - STANDARD SECTION

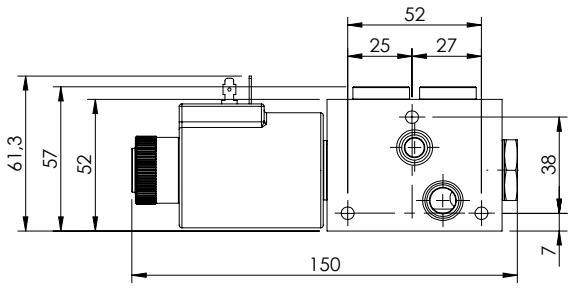

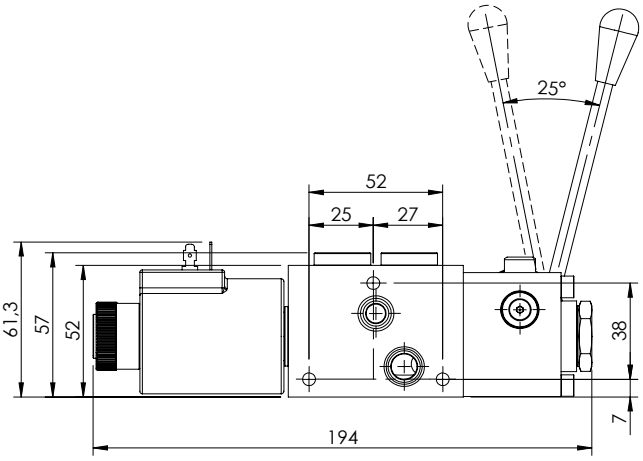

MANUAL LEVER

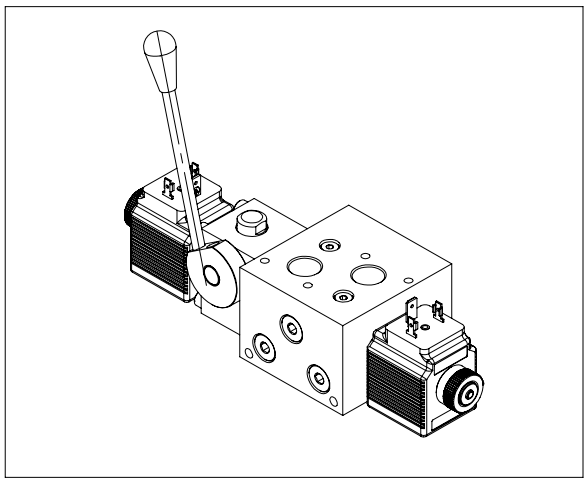

The lever option allow to operate manually the spool and can be ordered for all hydraulic schemes; in the standard version it is installed between monoblock and B port side coil.
The lever is normally installed on the monoblock port side but can be installed also rotated of 180°; , in each of these two positions the lever can be mounted vertical or horizontal simply removing the lever and reinstalling.
The lever is not engaged during solenoid operation and doesn't move when a coil is energized.

TECHNICAL DATA

Tabella generale	
Max pressure	210/320 bar
Max pressure series version	210 bar
Rated flow	30/60 l/min
Duty cycle	100 % ED
Weight more than standard	2 Kg
Weight more than standard	2,5 kg

OVERALL DIMENSIONS/ LEVER FOR 30 L/MIN SECTION

The lever option is designed to activate the spool manually, when the lever is pulled the flow is delivered from the port close to the lever, when it is pushed the flow is delivered from the port opposite to the lever.
The standard operation deliver full flow, in case of override operation it is possible to reduce the maximum stroke and consequently the speed, for this option contact AFT sales network.
The lever can be easily positioned vertical or horizontal by unscrewing it from the rotating shaft.

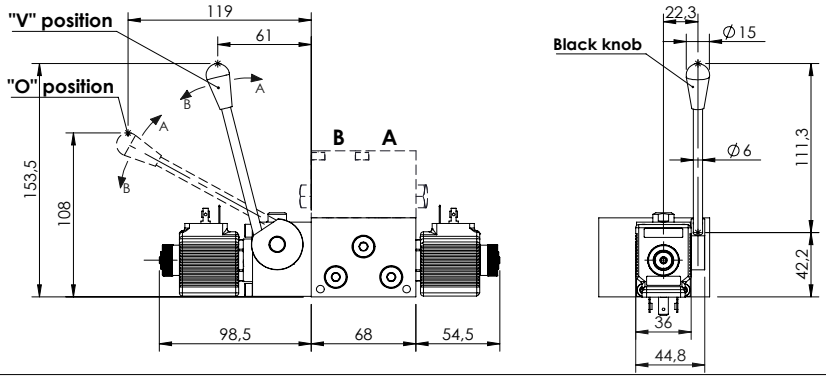

OVERALL DIMENSIONS/ LEVER FOR 60 L/MIN SECTION

The lever option is designed to activate the spool manually, when the lever is pulled the flow is delivered from the port close to the lever, when it is pushed the flow is delivered from the port opposite to the lever.
The standard operation deliver full flow, in case of override operation it is possible to reduce the maximum stroke and consequently the speed, for this option contact AFT sales network.
The lever can be easily positioned vertical or horizontal by unscrewing it from the rotating shaft.

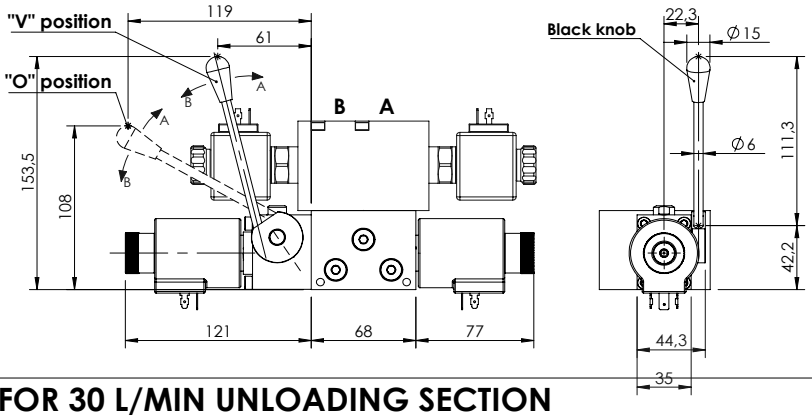

OVERALL DIMENSION/ LEVER FOR 30 L/MIN UNLOADING SECTION

The lever option is designed to activate the spool manually, when the lever is pulled the flow is delivered from the port close to the lever, when it is pushed the flow is delivered from the port opposite to the lever.
The standard operation deliver full flow, in case of override operation it is possible to reduce the maximum stroke and consequently the speed, for this option contact AFT sales network.
The lever can be easily positioned vertical or horizontal by unscrewing it from the rotating shaft.

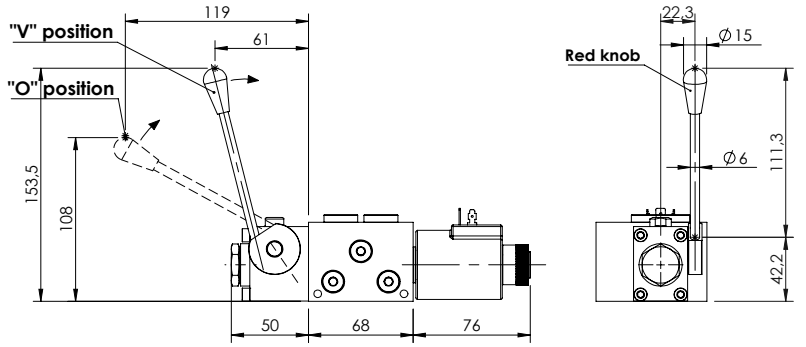

MOUNTING ELEMENTS

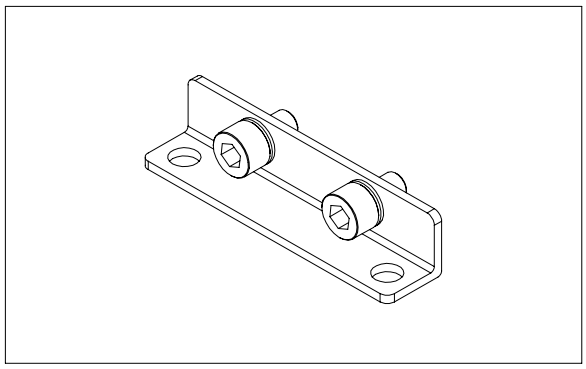

These parts are used to mount the directional valve on the application or to install modular valves and inlet section on the monoblock.

TECHNICAL DATA

Screw type	ISO 4762
Thread type	coarse thread
Standard screw	resistence class 8.8
High resistence screw	resistence class 12.9
Standard screw treatment	zinc-plated (white)
High res. screw treatment	Anodized (black)

MOUNTING BRACKETS

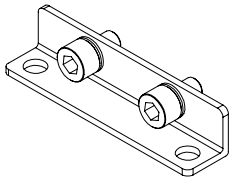

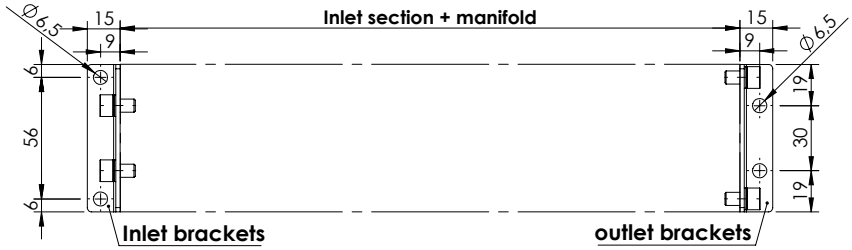

Mounting brackets	Screw lenght (mm)	Reference	Tightening Torque
PV000371	M6x10	AV000015 + PR000129	6 - 7 N/m

MOUNTING INLET SECTION

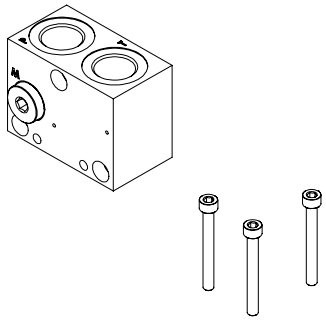

Inlet section	Screw lenght (mm)	Reference	Tightening Torque
SF000004	M6X40	AV000051	6 - 7 N/m
SF000016	M6X50	PE000100	6 - 7 N/m
SF000003	M6X60	AV000074	6 - 7 N/m
SF000002	M6X60	AV000074	6 - 7 N/m
SF000001	M6X75	PE000418	6 - 7 N/m

FIXING STACKING MODULES

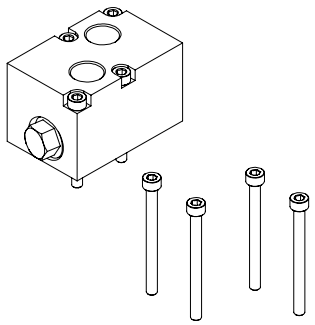

Flangiable valve	Screw lenght (mm)	Reference	Tightening Torque
MP	M5x16	AV000035	3 - 4 N/m
MA, MC and MB	M5x45	PE000148	3 - 4 N/m
KE and MF	M5x60	AV000016	3 - 4 N/m

EBL series

MONOBLOCK LOAD SENSING VALVE ON-OFF OR PROPORTIONAL

ATLANTIC Fluid Tech

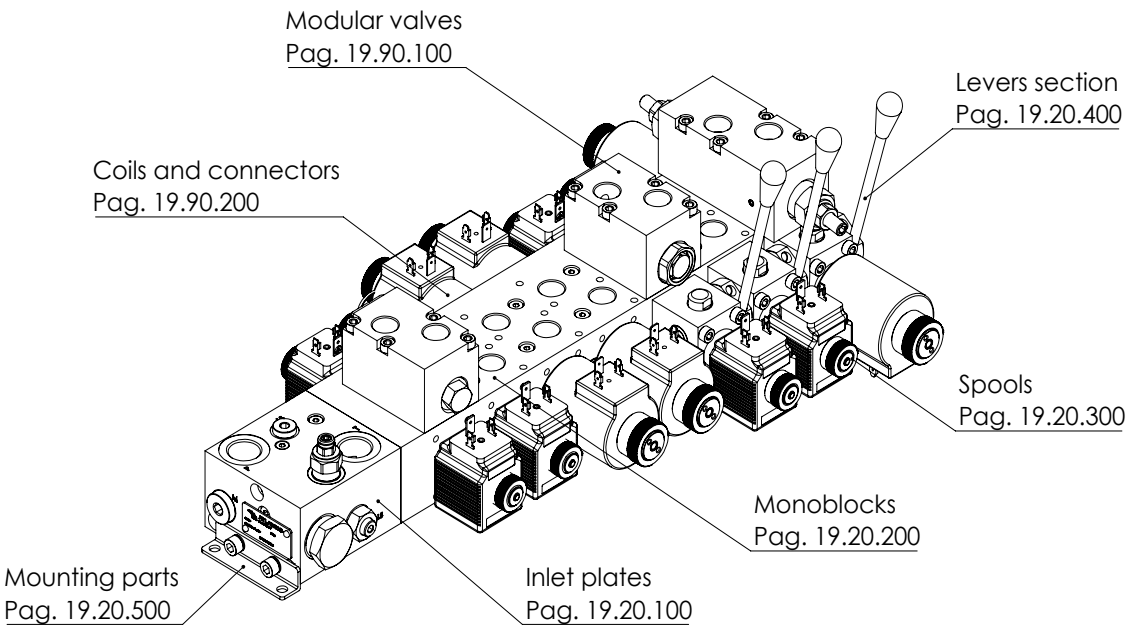

FEATURES

- Compact dimensions
- Low weight
- Custom spools
- Custom inlet blocks
- LS line on each spool section
- Sandwich valves for extra functions
- Cast iron monoblock and aluminum inlet block for standard applications
- High resistance cast iron monoblock and steel inlet block for high pressure systems
- Optional levers for manual operation
- No leak risk between sections
- Spools not under rod tension
- Zinc plated/anodized components for corrosion resistance

SPECIFICATION\DESCRIPTION

MAXIMUM OPERATING PRESSURE	Steel inlet block: 320 bar (4600 PSI) Aluminium inlet block: 210 bar (3045 PSI)
MAXIMUM TANK PRESSURE	20 bar (290 PSI)
RATED FLOW	030 series: 30 l/min (7.9 GPM) 060 series: 60 l/min (15.8 GPM)
COIL POWER	030 series: 26 W 060 series: 33 W
VOLTAGE	12 Vdc, 24 V DC, others on request
COIL CONNECTOR	DIN43650, AMP Junior, Deutsch DT04-2P
PORTS	Inlet: G1/2", 1/2 JIS, 7/8-14 UNF-2B (SAE#10) Outlet: G3/8",3/8 JIS, 3/4-16 UNF-2B (SAE#8)
OPERATING TEMPERATURE	NBR (ISO 1629) seals: -30, + 80 °C FKM (ISO 1629) seals: -20, +110 °C
FILTRATION	ISO 4406:1999: class 19/17/14 NAS 1638: class 8
MOUNTING POSITION	No restrictions
MATERIAL	Spool body: cast iron Spool: Herdened and grounded steel Inlet block: Aluminium or steel
SURFACE TREATMENT	Steel: zinc plating Aluminium: anodization

EBL series is a new directional load sensing valve that has innovative features in terms of performance, dimension, manufacturing reliability and customization. The valve consists in an inlet block flanged to a monoblock with spools. This construction gives the advantages of high flexibility in inlet block schemes, combined with the reliability and simplicity of monoblock spool valve construction, eliminating the risk of spools blocking due to overtightening of tie rods or the risk of leakage between sections. The spool monoblock is a 2 or 3 position, 4 ways, direct acting solenoid operated type. All sections have threaded ports at the top and removable plugs for tank connections to allow the installation of flanged blocks with additional functions like crossover reliefs, reliefs to tank, relief and anticavitations, counterbalance valves, P.O. checks, flow restrictors and flow regulators. All sections are equipped with standard push button override and they can be equipped with lever for manual use.

HOW ORDER IT

To order the separate parts please refer to each catalogue page.

To order an assembled block, contact AFT sales network specifying the part numbers following page 19.90.900 path.

For special versions please contact AFT sales network.

EBL series - INLET SECTION

SFLL-060-ZDNN-16

P, T PORTS
M PORT

ATLANTIC Fluid Tech

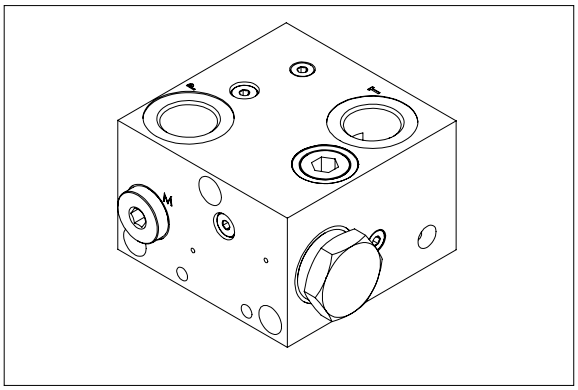

This inlet section is equipped with two thread ports (P,T) available in two different types G 1/2" or 3/4"-16 UNF plus a third threaded port M for pressure measuring available in G 1/4" or 7/16"-20. The manifold material is aluminium for applications up to 210 bar or zinc plated steel for applications up to 320 bar.

TECHNICAL DATA

Max pressure	210/320 bar
Rated flow	60 l/min
Hydraulic fluid	Mineral oil DIN 51524
Fluid viscosity	10-500 mm²/s
Fluid temperature	-25°C/75°C
Enviroment temperature	-25°C/60°C
Weight	0,9 Kg

HYDRAULIC SCHEME

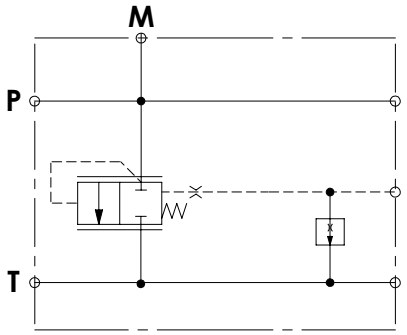

PRESSURE DROP LOGIC ELEMENT

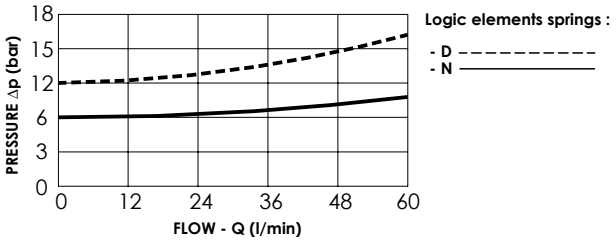

ORDERING DETAILS: SEPARATE ELEMENTS

SFLL-060-[*][*]NN-16-[***]-N

*	MATERIAL TYPE
A	Steel zinc-plated (320 bar)
Z	Aluminium anodized (210 bar)

*	LOGIC ELEMENT SPRING
D	Spring setting 12 bar (CD000103)
N	Spring setting 6 bar (CD000073)

***	PORTS		
	P line	**T** line	**M**
G12	G 1/2"	G 1/2"	G 1/4"
U34	3/4"-16 UNF	3/4"-16 UNF	7/16"-20 UNF

QUICK CODE	
DESCRIPTION	CODE
SFLL-060-ZDNN-16-G12-N	SF000045

OVERALL DIMENSIONS

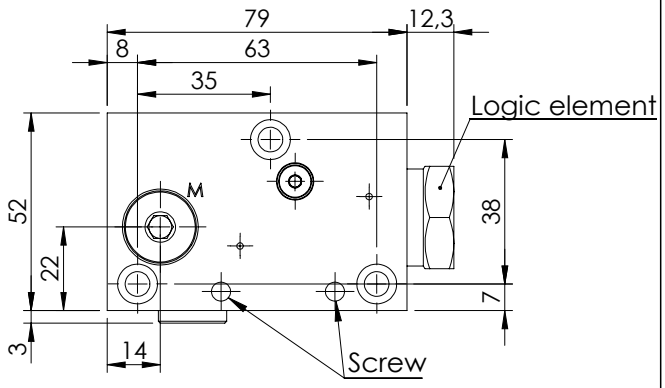

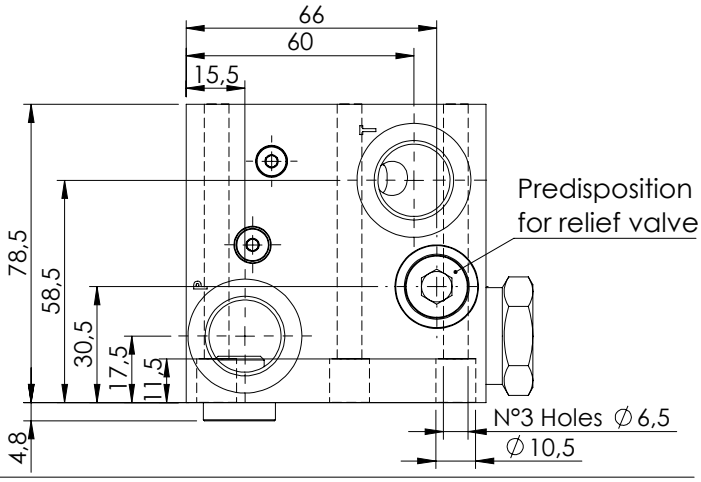

EBL series - INLET SECTION

SFLL-060-ZDNN-17

RELIEF VALVE M PORT

ATLANTIC Fluid Tech

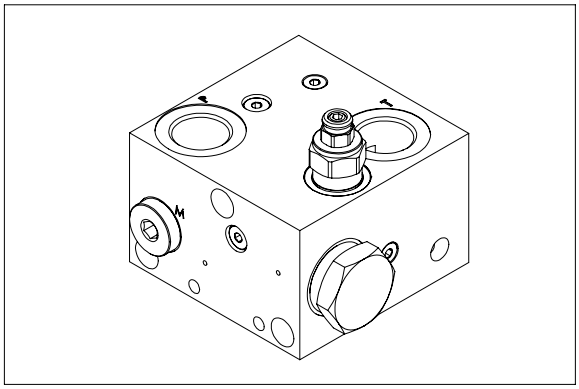

This inlet section is equipped with relief valve with adjustable setting operating on Ls signal, the adjustment is made by socket screw. This inlet section is equipped with two thread ports (P,T) available in two different types G 1/2" or 3/4"-16 UNF plus a third threaded port M for pressure measuring available in G 1/4" or 7/16"-20. The manifold material is aluminium for applications up to 210 bar or zinc plated steel for applications up to 320 bar.

TECHNICAL DATA

Max pressure	210/320 bar
Rated flow	60 l/min
Hydraulic fluid	Mineral oil DIN 51524
Fluid viscosity	10-500 mm²/s
Fluid temperature	-25°C/75°C
Enviroment temperature	-25°C/60°C
Weight	0,9 Kg

HYDRAULIC SCHEME

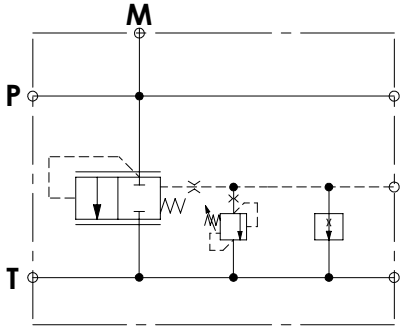

PRESSURE DROP LOGIC ELEMENT

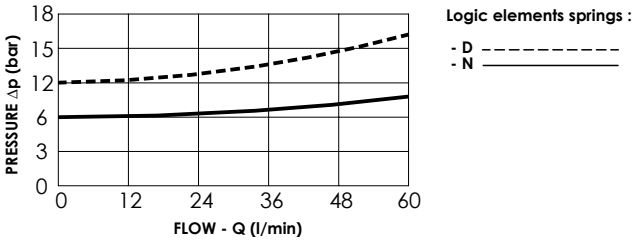

ORDERING DETAILS: SEPARATE ELEMENTS

SFLL-060-[*][*][*]N-17-[***]-N

*	MATERIAL TYPE
A	Steel zinc-plated (320 bar)
Z	Aluminium anodized (210 bar)

*	LOGIC ELEMENT SPRING
D	Spring setting 12 bar (CD000103)
N	Spring setting 6 bar (CD000073)

*	SETTING RANGE
N	Max setting 210 bar (CP000029)
A	Max setting 110 bar (CP000030)
B	Max setting 350 bar (CP000002)

***	PORTS		
	P line	**T** line	**M**
G12	G 1/2"	G 1/2"	G 1/4"
U34	3/4"-16 UNF	3/4"-16 UNF	7/16"-20 UNF

QUICK CODE	
DESCRIPTION	CODE
SFLL-060-ZDNN-17-G12-N	SF000010
SFLL-060-ZNNN-17-G12-N	SF000032

OVERALL DIMENSIONS

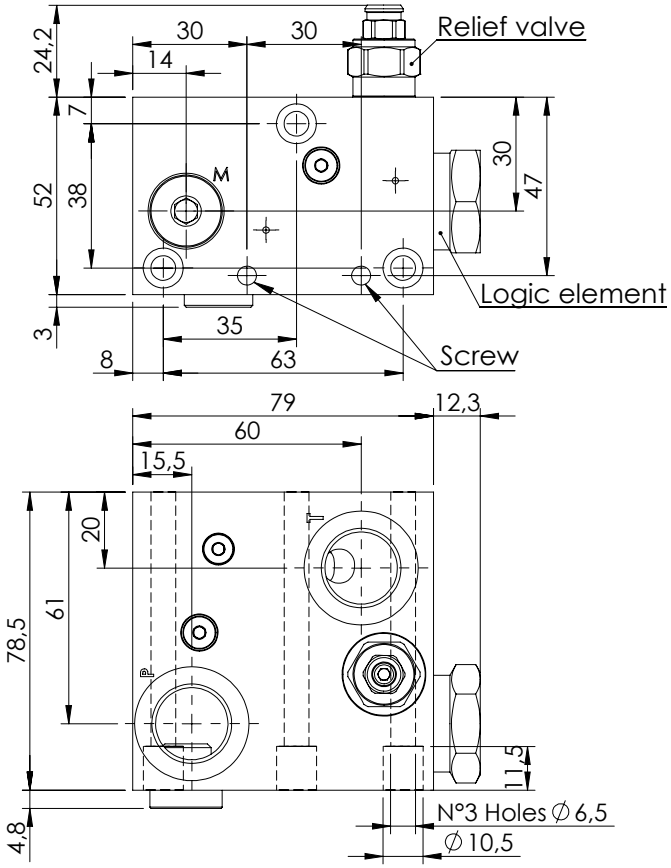

EBL series - INLET SECTION

SFLL-060-ZDNN-19

RELIEF VALVE UNLOADING VALVE

ATLANTIC Fluid Tech

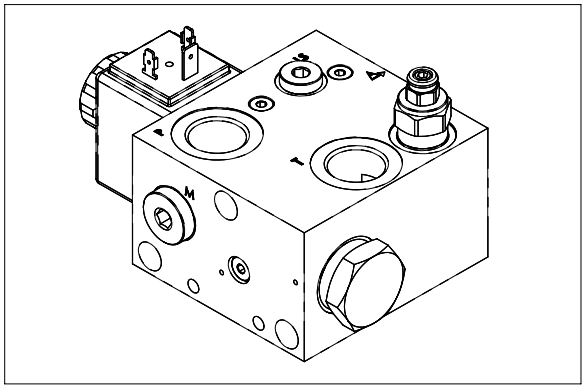

This inlet section is equipped with relief valve with adjustable setting operating on Ls signal, the adjustment is made by socket screw. It is present an unloading solenoid valve normally open with emergency operating on Ls signal.
There are two thread ports (P, T) available in two different types G 1/2" or 3/4"-16 UNF plus M port available in G 1/4".
Max inlet flow 60 l/min. The manifold material is aluminium for applications up to 210 bar or zinc plated steel for applications up to 320 bar.

TECHNICAL DATA

Max pressure	210/320 bar
Rated flow	60 l/min
Hydraulic fluid	Mineral oil DIN 51524
Fluid viscosity	10-500 mm²/s
Fluid temperature	-25°C/75°C
Enviroment temperature	-25°C/60°C
Weight	1,05 Kg

HYDRAULIC SCHEME

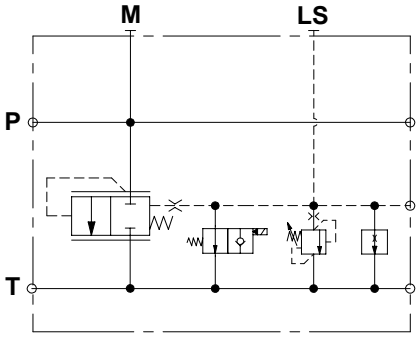

PRESSURE DROP LOGIC ELEMENT

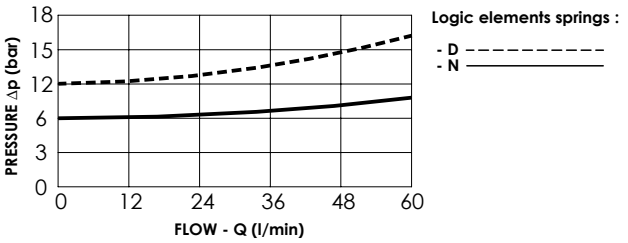

ORDERING DETAILS: SEPARATE ELEMENTS

SFLL-060-[*][*][*]N-19-[***]-[*][**]N

*	MATERIAL TYPE
A	Steel zinc-plated (320 bar)
Z	Aluminium anodized (210 bar)

*	LOGIC ELEMENT SPRING
D	Spring setting 12 bar (CD000103)
N	Spring setting 6 bar (CD000073)

*	SETTING RANGE
N	Max setting 210 bar (CP000029)
A	Max setting 110 bar (CP000030)
B	Max setting 350 bar (CP000032)

***	PORTS		
	P line	**T** line	**M**
G12	G 1/2"	G 1/2"	G 1/4"
U34	3/4"-16 UNF	3/4"-16 UNF	7/16"-20 UNF

*	VOLTAGE
	no coils
A	12 V DC
B	24 V DC

**	COILS TYPE
	no coils
HR	Hirshmann (ISO 4400 DIN 43650)
DT	Deutsch (DT04-2P)
AJ	Amp junior (AJ type)

QUICK CODE	
DESCRIPTION	CODE
SFLL-060-ZDNN-19-G12-N	SF000019
Unloading Valve	CE000873

OVERALL DIMENSIONS

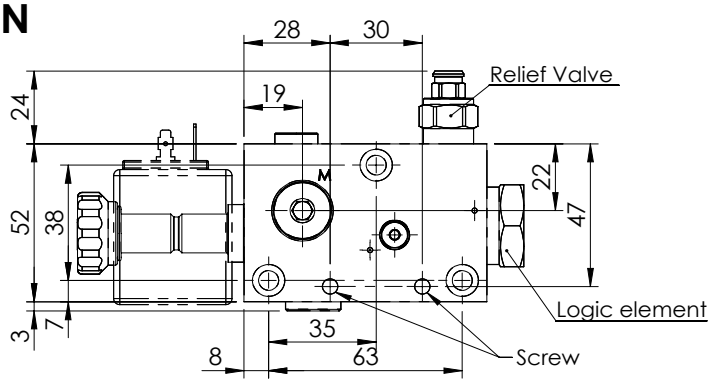

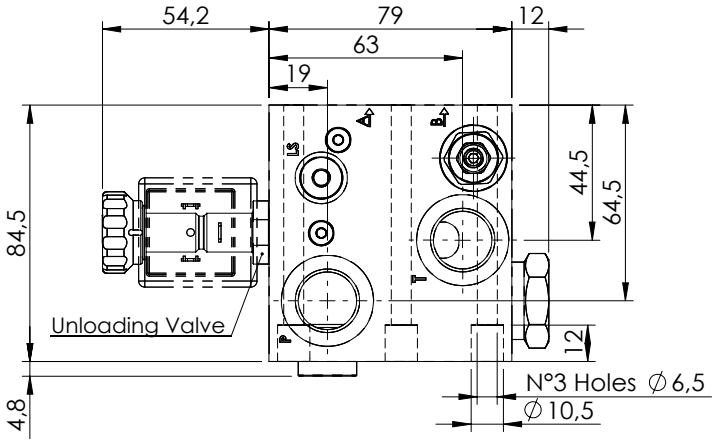

EBL series - INLET SECTION

SFLL-060-ZDNN-18

RELIEF VALVE EXTERNAL OR INTERNAL LS

ATLANTIC Fluid Tech

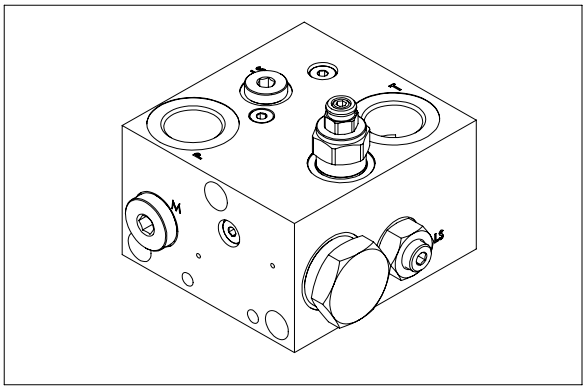

This inlet section is equipped with relief valve with adjustable setting operating on Ls signal, the adjustment is made by socket screw.It is present an unloading compensator normally closed operating with Ls signal.
There are two thread ports (P, T) available in two different types G 1/2" or 3/4"-16 UNF plus M port available in G 1/4".
Max inlet flow 60 l/min. The manifold material is aluminium for applications up to 210 bar or zinc plated steel for applications up to 320 bar.

TECHNICAL DATA

Max pressure	210/320 bar
Rated flow	60 l/min
Hydraulic fluid	Mineral oil DIN 51524
Fluid viscosity	10-500 mm²/s
Fluid temperature	-25°C/75°C
Enviroment temperature	-25°C/60°C
Weight	1 Kg

HYDRAULIC SCHEME

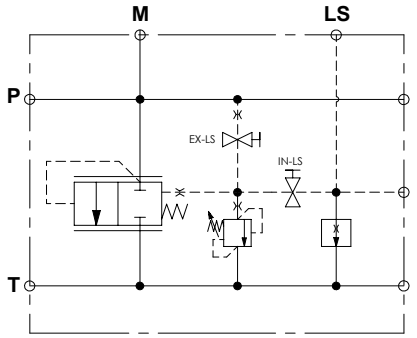

PRESSURE DROP LOGIC ELEMENT

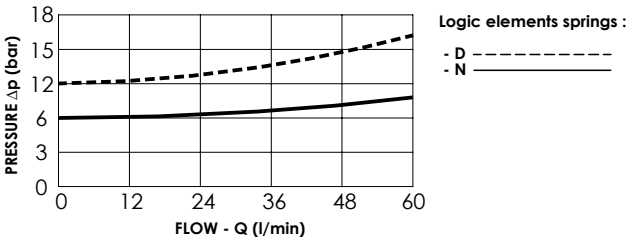

ORDERING DETAILS: SEPARATE ELEMENTS

SFLL-060-*N-18-***-N**

*	MATERIAL TYPE
A	Steel zinc-plated (320 bar)
Z	Aluminium anodized (210 bar)

*	LOGIC ELEMENT SPRING
D	Spring setting 12 bar (CD000103)
N	Spring setting 6 bar (CD000073)

*	SETTING RANGE
N	Max setting 210 bar (CP000029)
A	Max setting 110 bar (CP000030)
B	Max setting 350 bar (CP000002)

***	PORTS		
	P line	**T** line	**M**
G12	G 1/2"	G 1/2"	G 1/4"
U34	3/4"-16 UNF	3/4"-16 UNF	7/16"-20 UNF

QUICK CODE	
DESCRIPTION	CODE
SFLL-060-ZDNN-18-G12-N	SF000011
SFLL-060-ZNNN-18-G12-N	SF000031

OVERALL DIMENSIONS

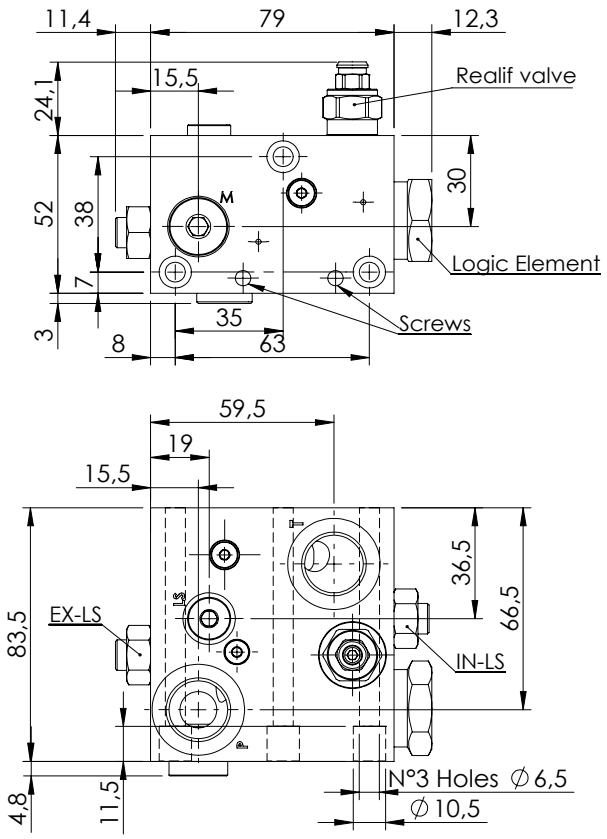

EBL series - MONOBLOCK

LDLP-060-NNNN

CAST-IRON MANIFOLD

ATLANTIC Fluid Tech

In LDNS/P-030-C plug are included in the manifold

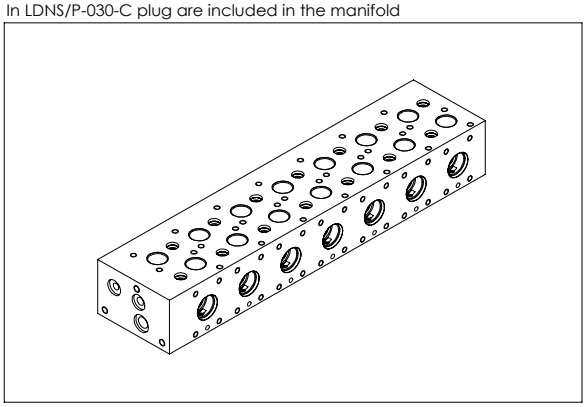

The monoblock valve can be ordered with a number of spool's section from 1 to 7, each section is equipped with side monting holes for lever option and with treaded holes at the top for flangeable modular valve. There are also two removable plugs connecting to a T line to allow to flange special blocks.
The standard version has G 3/8" ports and can be supplied with top blocks with 9/16"-18 UNF (SAE6) or M16x1,5.
The manifold it is made with cast-iron and protected from corrosion with zinc-plating surface treatment.
The inlet face has 3 threaded holes to flange an inlet block that can be customized for each application, giving high flexibility to the project.

TECHNICAL DATA

Max pressure	320 bar
Rated flow	60 l/min
Material	Cast-iron
Surface treatment	Zinc-plated black
Weight for single section	1,9 kg
Wight for additional sections	+ 1,1 Kg each

ORDERING DETAILS: SEPARATE ELEMENTS

LDL * -060- NNNN - ** - *

*	TYPE OF MANIFOLD
S	Series connection
P	Parallel connection

**	NUMBER OF SECTION
01	manifold with one section
02	manifold with two sections
03	manifold with three sections
04	manifold with four sections
05	manifold with five sections
06	manifold with six sections
07	manifold with seven sections

***	PORTS		
	P line	**T** line	**M**
G38	G 3/8"	G 3/8"	G 1/4"
U09	9/16"-18 UNF	9/16"-18 UNF	7/16"-20 UNF

QUICK CODE	
DESCRIPTION	CODE
LDLP-060-NNNN-01-G38	LD000183
LDLP-060-NNNN-02-G38	LD000184
LDLP-060-NNNN-03-G38	LD000185
LDLP-060-NNNN-04-G38	LD000187
LDLP-060-NNNN-05-G38	LD000188
LDLP-060-NNNN-06-G38	LD000189
LDLP-060-NNNN-07-G38	LD000190

MANIFOLD CONFIGURATIONS

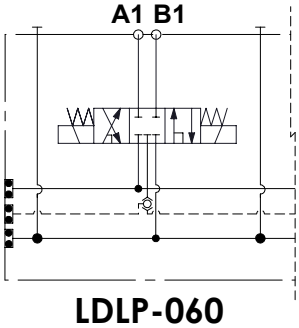

LDLP-060

MONOBLOCK PRESSURE DROP

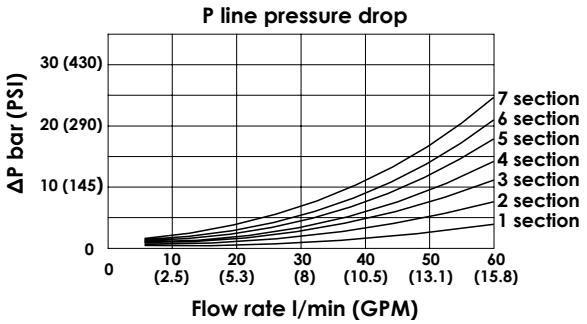

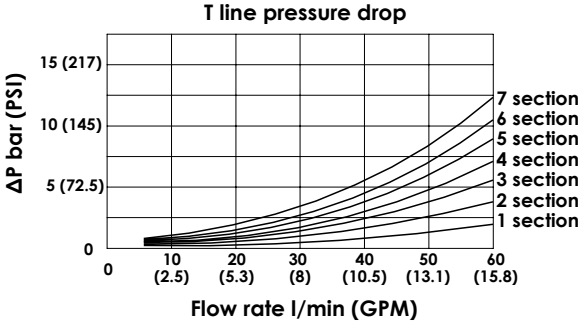

EBL series - MONOBLOCK

LDLP-060-NNNN

CAST-IRON MANIFOLD

ATLANTIC Fluid Tech

GAS VERSION

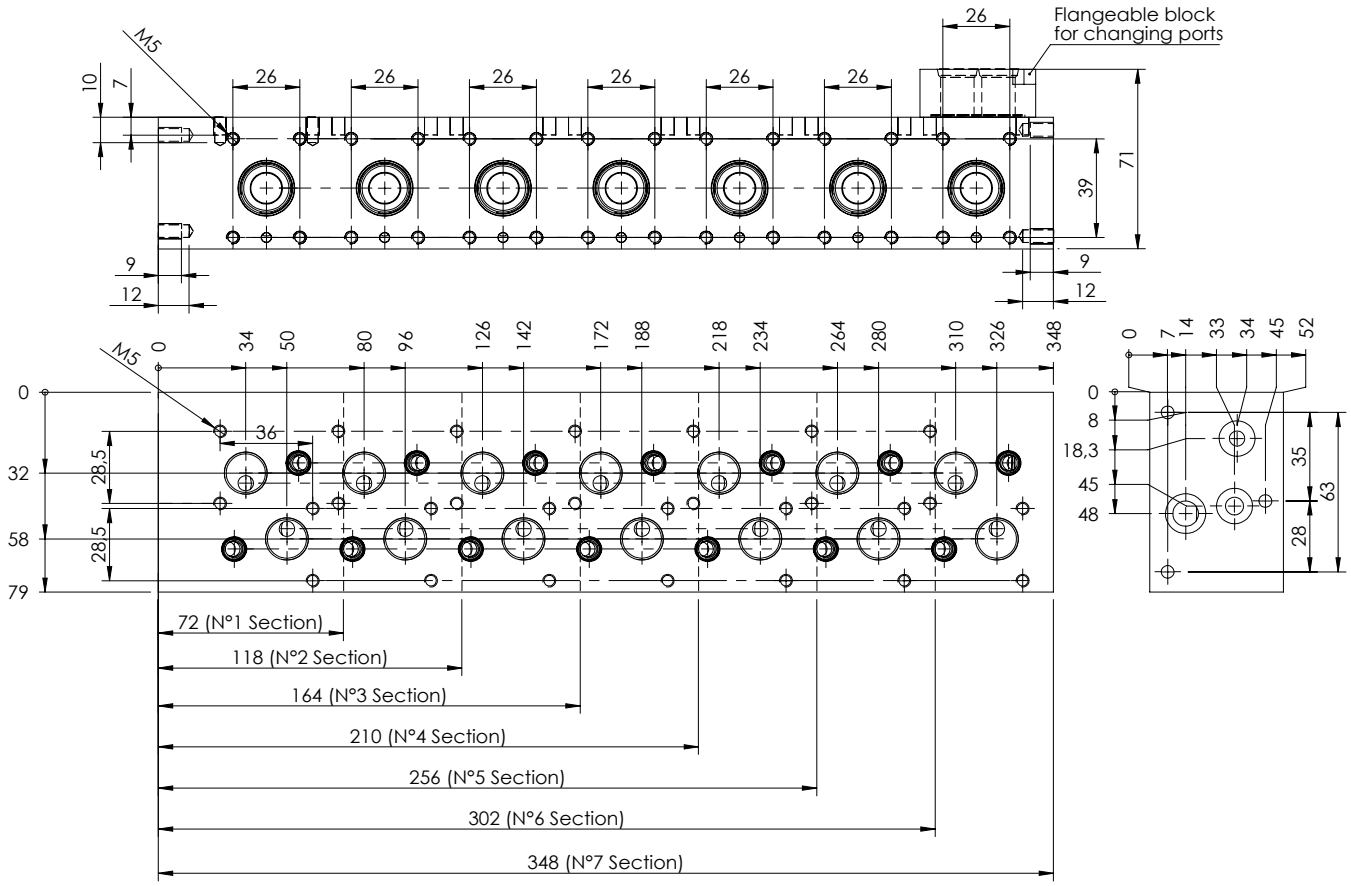

SAE VERSION

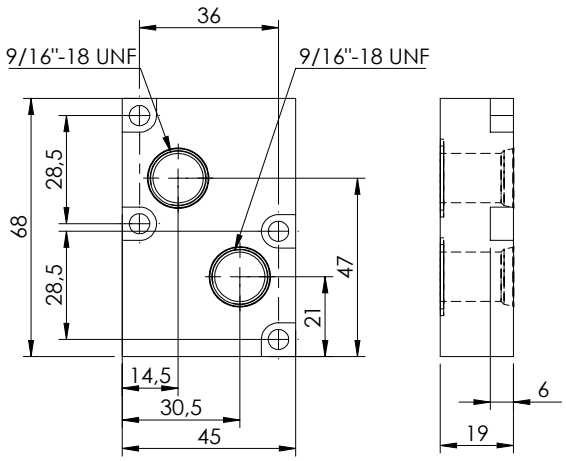

This top flangeable block transform the monoblock to a UNF version.

Quick code: MP000096

METRIC VERSION

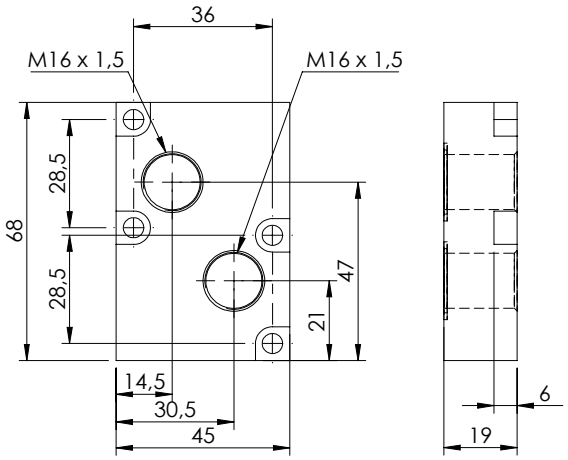

This top flangeable block transform the monoblock to a Metric version.

Quick code: MP000097

EBL series - SPOOL SECTION

SHNE-030-LSON

30 L/MIN SOLENOID VALVE

ATLANTIC Fluid Tech

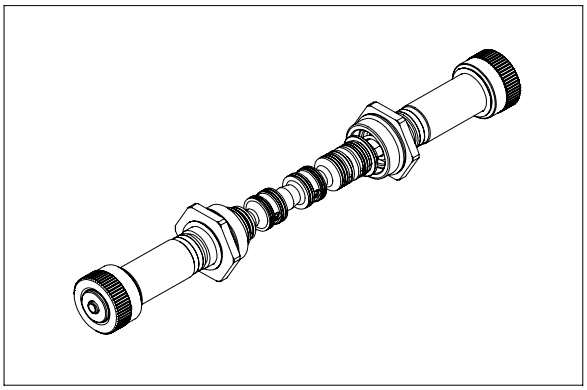

This spool group is rated for 30 lpm and for a maximum pressure of 320 bar; the spool is actuated by on off tubes and can be ordered with different hydraulic schemes.
Each spools is interchangeable to give maximum flexibility and can be fit in all monoblock sections, changing spools require adequate training.
The group is made by two tubes, one spool, two springs and mounting components.

TECHNICAL DATA

Max pressure	320 bar
Rated flow	30 l/min
Max excitation frequency	3 Hz
Duty cycle	100 % ED
Hydraulic fluid	Mineral oil DIN 51524
Fluid viscosity	10/500 mm²/s
Fluid temperature	-25°C/75°C
Enviroment temperature	-25°C/60°C
Weight with one solenoid	0,12 Kg
Weight with two solenoid	0,15kg

ORDERING DETAILS: SEPARATE ELEMENTS

SH[*][*] - 030 - LS[**]-[**]-396-[*][**]N

*	OVERRIDE TYPE
N	Standard
P	Push
V	Screw

*	SECTION TYPE
E	Solenoid operated
L	Solenoid operated plus lever operated
M	Lever operated

**	ACTUATION TYPE
ON	On/Off
SS	Soft shift

**	SPOOL TYPE
...	See table n°1

*	COILS VOLTAGE
	no coils
A	12 V DC
B	24 V DC

**	COILS TYPE
	no coils
HR	Hirschmann (ISO 4400 DIN 43650)
DT	Deutshc (DT04-2P)
AJ	Amp Junior (AJ type)

QUICK CODE	
DESCRIPTION	CODE
SHNE-030-LSON-74-396	
SHNE-030-LSON-75-396	

HYDRAULIC SYMBOLS

Table n°1

SPOOL CODE	HYDRAULIC SCHEME	TRANSITORY POSITION
74	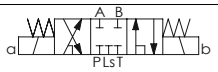	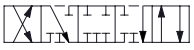
75	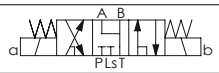	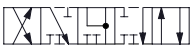

SPOOL CODE		HYDRAULIC SCHEME		TRANSITORY POSITION	
a	**b**	**a**	**b**	**a**	**b**

OVERRIDE TYPE

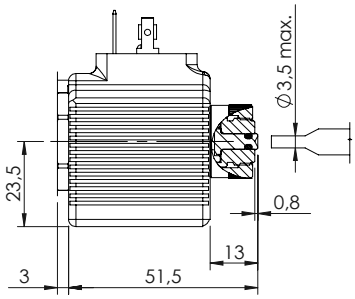

OVERRIDE TYPE "N"

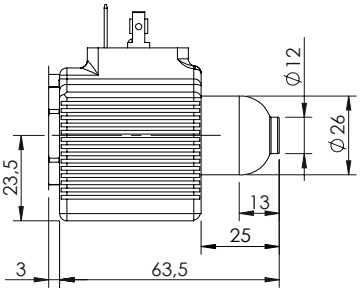

OVERRIDE TYPE "P"

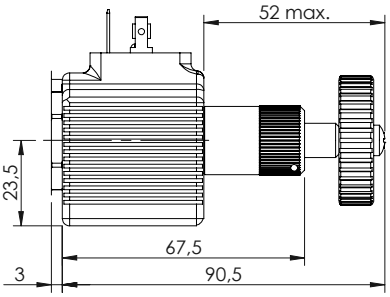

OVERRIDE TYPE "V"

SHNE-030-LSON

30 L/MIN SOLENOID VALVE

ATLANTIC Fluid Tech

PERFORMANCE LIMITS CURVES - STANDARD SECTION

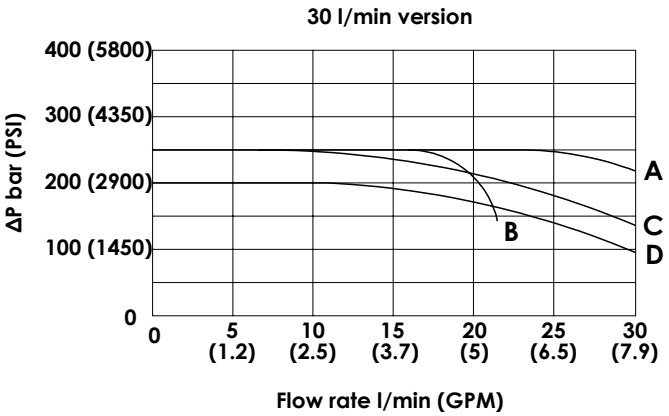

Spool type	Performance limits curve
74	A
75	A
	B
	A
	A
	A
	C
	D

The tests are carried out with hot solenoids , powered with 90 % of nominal voltage, with 50 ° C fluid temperature.
The fluid used is mineral oil having a viscosity of 46 mm² / s @ 40 ° C .
The values in the diagram refer to tests carried out with flow simultaneously in both directions (P > A, B > T).
In cases of schemes 4/2 or 4/3 used with the flow in one direction only the performance can change.

PRESSURE DROP CURVES - STANDARD SECTION

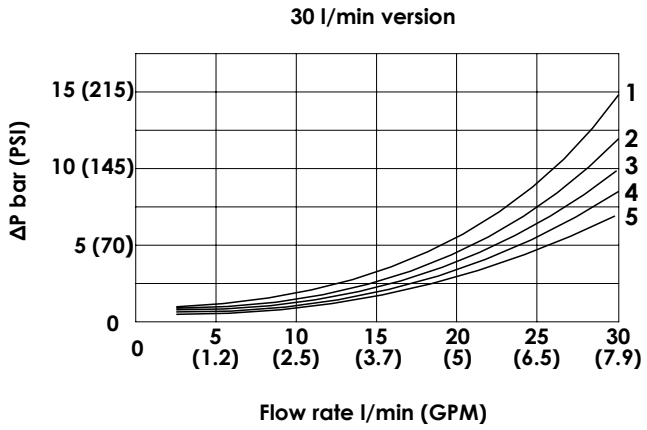

Spool type	Pressure drop curve				
	P>A	P>B	A>T	B>T	P>T
74	3	3	4	4	/
75	3	3	5	5	/
	2	2	1	1	2
	/	3	4	/	/
	/	3	5	/	/
	2	/	/	1	/
	/	3	4	/	/
	/	2	3	/	/

The diagram shows the performance limit curve of standard section. The fluid used is mineral oil viscosity 46 mm²/s at 40 °C ; the tests are performed at a 40 °C temperature

OVERALL DIMENSION - STANDARD SECTION

In case of top modular valve MA or MC type installation the coil connection can be faced to the top or to the bottom of the block. (See modular valve section)

In case of top modular valve MB, KE and KF type installation the coil connection can be faced only to the bottom of the block. (See modular valve section)

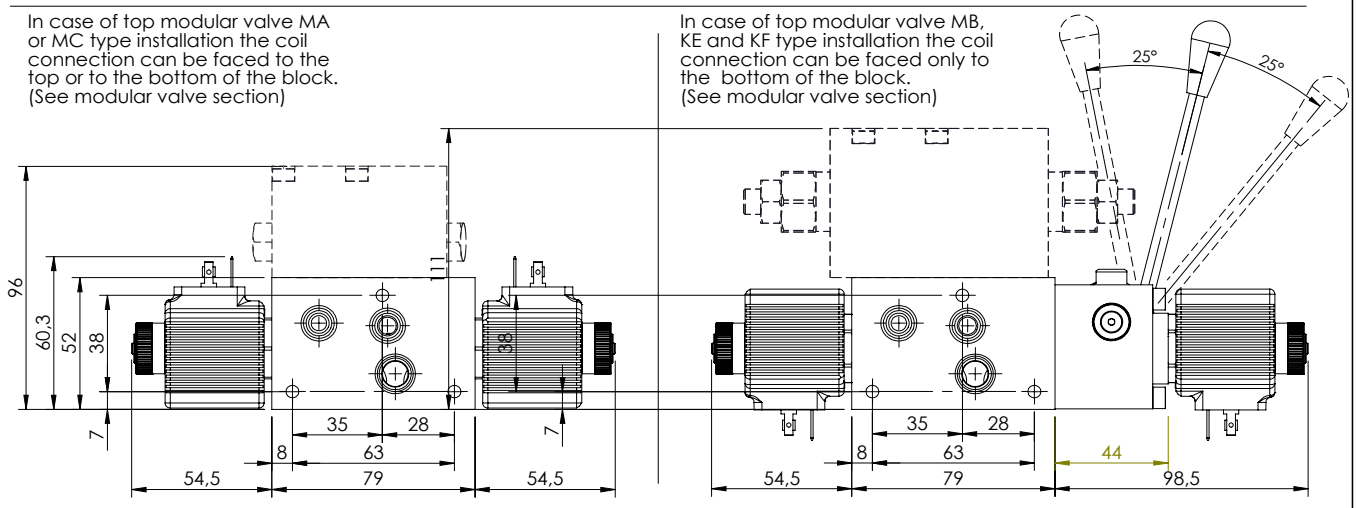

EBL series - SPOOL SECTION

SHNE-060-LSON

60 L/MIN SOLENOID VALVE

ATLANTIC Fluid Tech

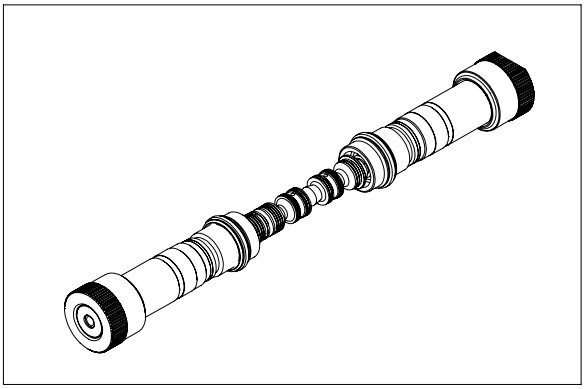

This spool group is rated for 60 lpm and for a maximum pressure of 320 bar; the spool is actuated by on off tubes and can be ordered with different hydraulic schemes.
Each spools is interchangeable to give maximum flexibility and can be fit in all monoblock sections, changing spools require adequate training.
The group is made by two tubes, one spool, two springs and mounting components.

TECHNICAL DATA

Max pressure	320 bar
Rated flow	60 l/min
Max excitation frequency	3 Hz
Duty cycle	100 % ED
Hydraulic fluid	Mineral oil DIN 51524
Fluid viscosity	10/500 mm²/s
Fluid temperature	-25°C/75°C
Enviroment temperature	-25°C/60°C
Weight with one solenoid	0,2 Kg
Weight with two solenoid	0,4 kg

ORDERING DETAILS: SEPARATE ELEMENTS

SH * * - 060 - L S ** - ** -396- * ** N

*	OVERRIDE TYPE
N	Standard
P	Push
V	Screw

*	SECTION TYPE
E	Solenoid operated
L	Solenoid operated plus lever operated
M	Lever operated

**	ACTUATION TYPE
ON	On/Off
SS	Soft shift

**	SPOOL TYPE
...	See table n°1

**	COILS VOLTAGE
	no coils
A	12 V DC
B	24 V DC

**	COILS TYPE
	no coils
HR	Hirschmann (ISO 4400 DIN 43650)
DT	Deutshc (DT04-2P)
AJ	Amp Junior (AJ type)

QUICK CODE	
DESCRIPTION	CODE
SHNE-060-LSON-74-396	
SHNE-060-LSON-75-396	

HYDRAULIC SYMBOLS

Table n°1

SPOOL CODE	HYDRAULIC SCHEME	TRANSITORY POSITION
74	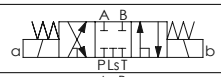	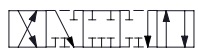
75	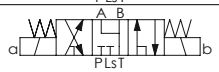	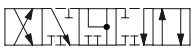

SPOOL CODE		HYDRAULIC SCHEME		TRANSITORY POSITION	
a	b	a	b	a	b

OVERRIDE TYPE

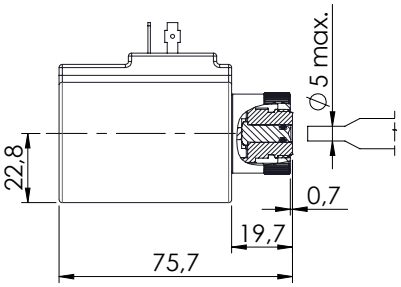

OVERRIDE TYPE "N"

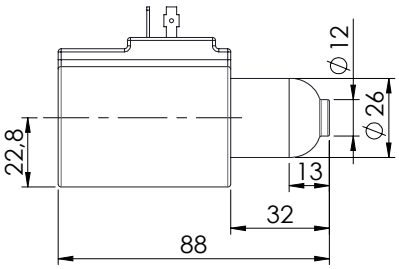

OVERRIDE TYPE "P"

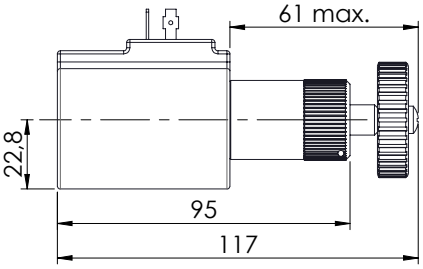

OVERRIDE TYPE "V"

SHNE-060-LSON

60 L/MIN SOLENOID VALVE

ATLANTIC Fluid Tech

PERFORMANCE LIMIT CURVES - STANDARD SECTION

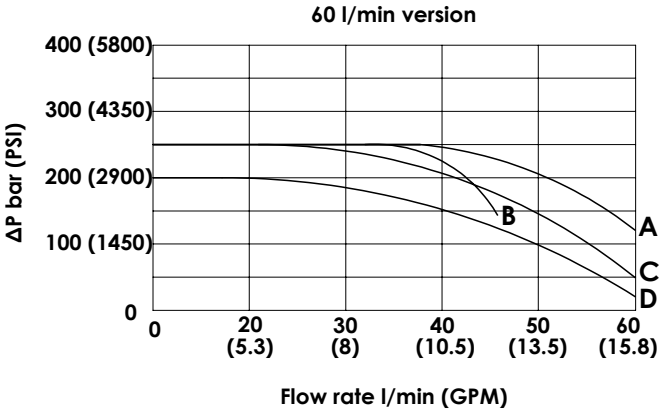

Spool type	Performance limits curve
74	A
75	A
	B
	A
	A
	A
	C
	D

The tests are carried out with hot solenoids , powered with 90 % of nominal voltage, with 50 ° C fluid temperature.
The fluid used is mineral oil having a viscosity of 46 mm² / s @ 40 ° C .
The values in the diagram refer to tests carried out with flow simultaneously in both directions (P > A, B > T).
In cases of schemes 4/2 or 4/3 used with the flow in one direction only the performance can change.

PRESSURE DROP CURVES - STANDARD SECTION

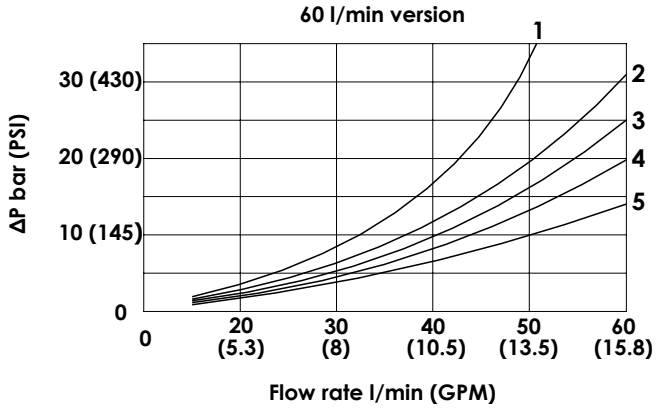

Spool type	Pressure drop curve				
	P>A	P>B	A>T	B>T	P>T
74	3	3	4	4	/
75	3	3	5	5	/
	2	2	1	1	2
	/	3	4	/	/
	/	3	5	/	/
	2	/	/	1	/
	/	3	4	/	/
	/	2	3	/	/

The diagram shows the performance limit curve of standard section. The fluid used is mineral oil viscosity 46 mm²/s at 40 °C ; the tests are performed at a 40 °C temperature

OVERALL DIMENSION - STANDARD SECTION

In case of top modular valve MA or MC type installation the coil connection can be faced to the top or to the bottom of the block. (See modular valve section)

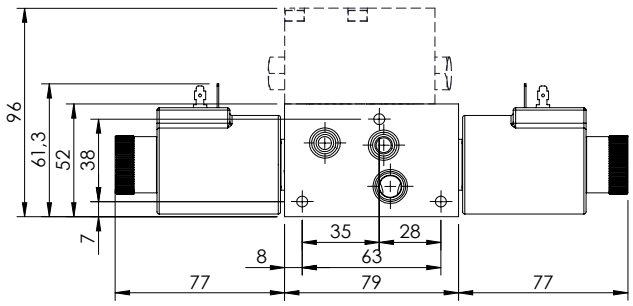

In case of top modular valve MB, KE and KF type installation the coil connection can be faced only to the bottom of the block. (See modular valve section)

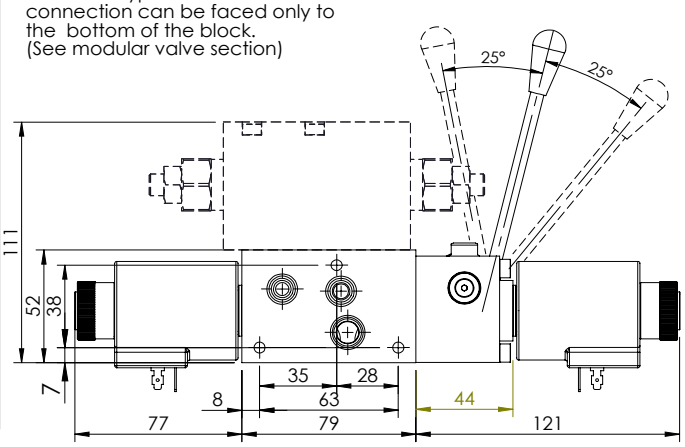

EBL series - SPOOL SECTION

SHNE-050-LSPR

50 L/MIN PROPORTIONAL SOLENOID VALVE

ATLANTIC Fluid Tech

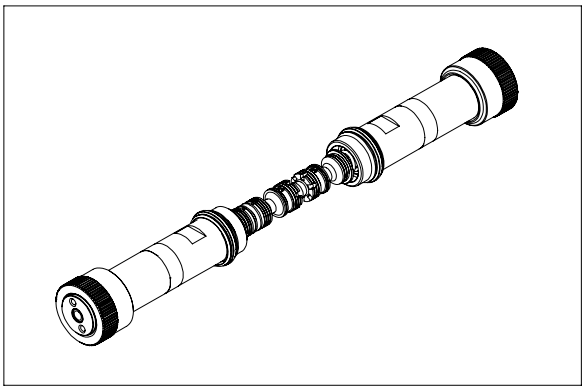

This spool group is rated for 50 lpm and for a maximum pressure of 320 bar; the spool is actuated by proportional tubes and can be ordered with different hydraulic schemes. Each spools is interchangeable to give maximum flexibility and can be fit in all monoblock sections, changing spools require adequate training.
The group is made by two tubes, one spool, two springs and mounting components.

TECHNICAL DATA

Max pressure	320 bar
Rated flow	50 l/min
Max excitation frequency	3 Hz
Duty cycle	100 % ED
Max current	1.76A(12 V dc) 0.88A (24 V dc)
Hydraulic fluid	Mineral oil DIN 51524
Fluid viscosity	10/500 mm²/s
Fluid temperature	-25°C/75°C
Enviroment temperature	-25°C/60°C
Weight with one solenoid	0,5 Kg
Weight with two solenoid	0,7 kg

ORDERING DETAILS: SEPARATE ELEMENTS

SH[*][*]-0[**]-LSPR-[**]-396-[*][**]N

*	OVERRIDE TYPE
N	Standard
P	Push
V	Screw

*	SECTION TYPE
E	Solenoid operated
L	Solenoid operated plus lever operated
M	Lever operated

**	SPOOL FLOW
20	20 l/min at 12 bar - 10 l/min at 6 bar
35	35 l/min at 12 bar - 20 l/min at 6 bar
50	50 l/min at 12 bar - 30 l/min at 6 bar

**	PROPORTIONAL TYPE
...	See table n°1

*	COILS VOLTAGE
	no coils
A	12 V DC
B	24 V DC

**	COILS TYPE
	no coils
HR	Hirschmann (ISO 4400 DIN 43650)
DT	Deutshc (DT04-2P)
AJ	Amp Junior (AJ type)

QUICK CODE	
DESCRIPTION	CODE
SHNE-030-LSPR-77-396	
SHNE-030-LSPR-78-396	

TECHNICAL FEATURES

Proportionl type	Spool flow	Rated flow with 12 bar ΔP	Maximum flow	Max. operating pressure
All	**20**	15	20	320
All	**35**	30	35	320
All	**50**	45	50	320

Proportionl type	Spool flow	Rated flow with 6 bar ΔP	Maximum flow	Max. operating pressure
All	**20**	10	15	320
All	**35**	20	25	320
All	**50**	30	35	320

HYDRAULIC SYMBOLS

Table n°1

SPOOL CODE	HYDRAULIC SCHEME	TRANSITORY POSITION
77	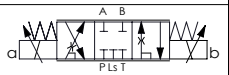	
78	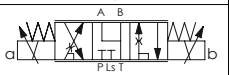	

OVERRIDE TYPE

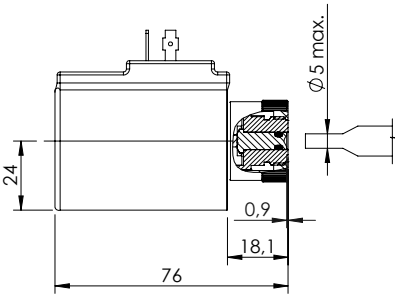

OVERRIDE TYPE "N"

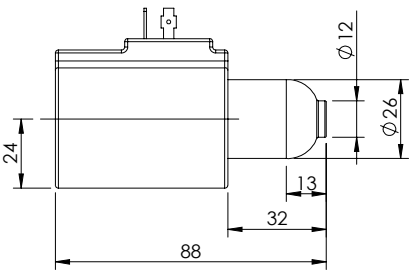

OVERRIDE TYPE "P"

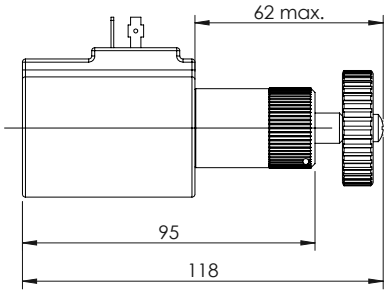

OVERRIDE TYPE "V"

EBL series - SPOOL SECTION

SHNE-050-LSPR

50 L/MIN PROPORTIONAL SOLENOID VALVE

ATLANTIC Fluid Tech

FLOW DIAGRAM - 050

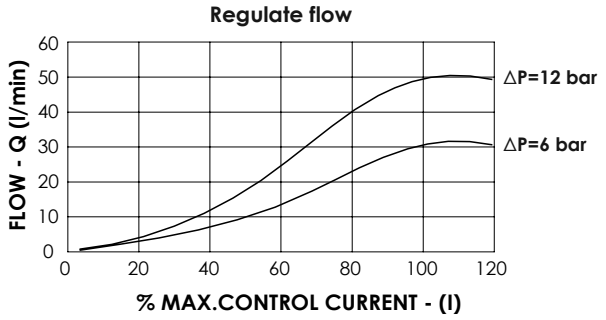

COMPESATION DIAGRAM - 050

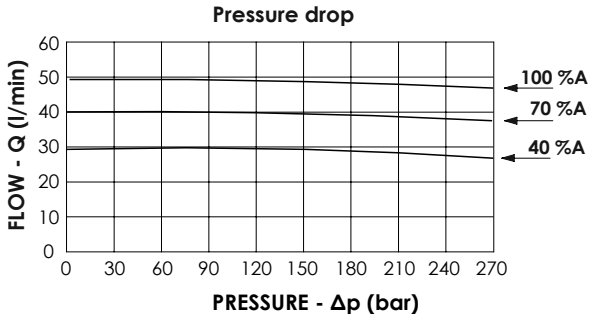

FLOW DIAGRAM - 035

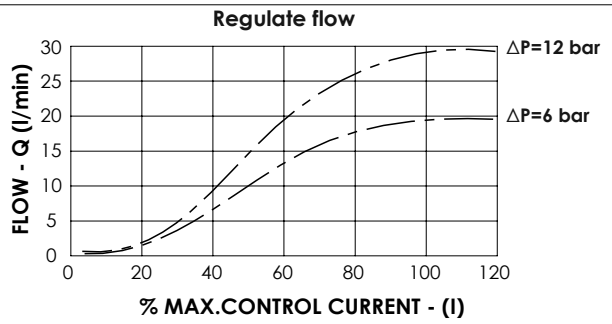

COMPENSATION DIAGRAM - 035

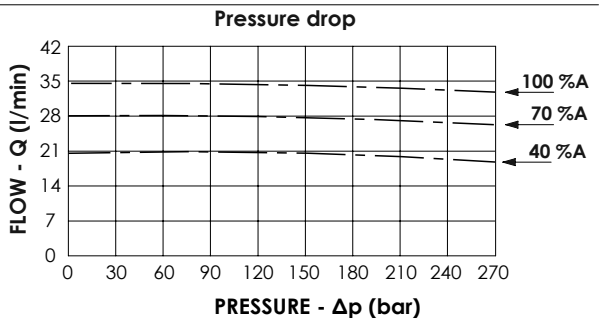

FLOW DIAGRAM - 020

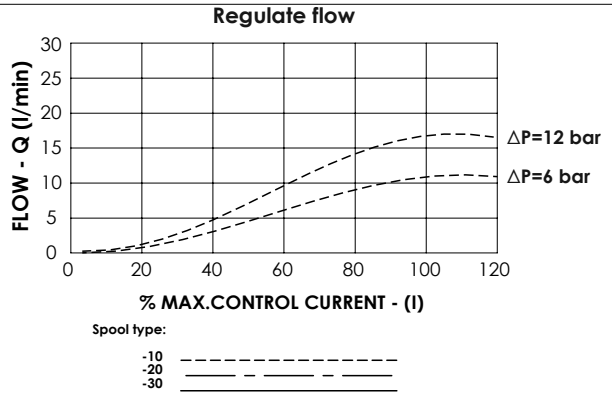

COMPENSATION DIAGRAM - 020

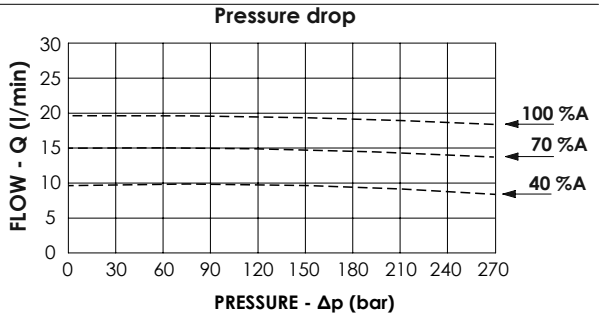

In the diagram shows the performance limits curves of standard section. The fluid used is mineral oil viscosity 46 mm²/s at 40 °C ; the tests were performed at a 40 °C temperature

OVERALL DIMENSION - STANDARD SECTION

In case of top modular valve MA or MC type installation the coil connection can be faced to the top or to the bottom of the block. (See modular valve section)

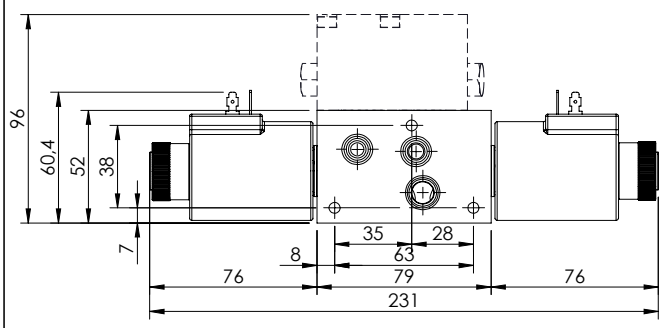

In case of top modular valve MB, KE and KF type installation the coil connection can be faced only to the bottom of the block. (See modular valve section)

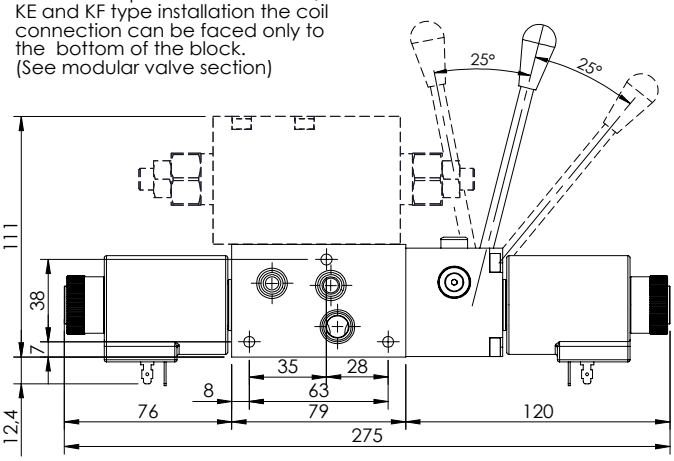

MANUAL LEVER

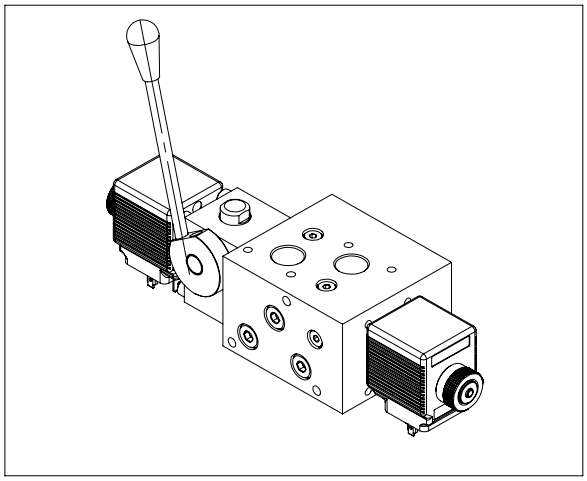

The lever option allow to operate manually the spool and can be ordered for all hydraulic schemes; in the standard version it is installed between monoblock and B port side coil.
The lever is normally installed on the monoblock port side but can be installed also rotated of 180°; , in each of these two positions the lever can be mounted vertical or horizontal simply removing the lever and reinstalling.
The lever is not engaged during solenoid operation and doesn't move when a coil is energized.

TECHNICAL DATA

Max pressure	210/320 bar
Max pressure in line type	210 bar
Rated flow	30/60 l/min
Insertion	100 % ED
Weight more than standard	2 Kg
Weight more than standard	2,5 kg

OVERALL DIMENSIONS/ LEVER FOR 30 L/MIN SECTION

The lever option is designed to activate the spool manually, when the lever is pulled the flow is delivered from the port close to the lever, when it is pushed the flow is delivered from the port opposite to the lever.
The standard operation deliver full flow, in case of override operation it is possible to reduce the maximum stroke and consequently the speed, for this option contact AFT sales network.
The lever can be easily positioned vertical or horizontal by unscrewing it from the rotating shaft.

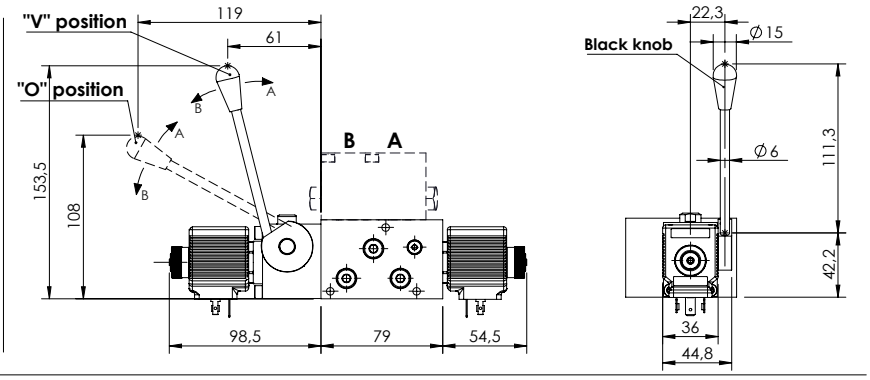

OVERALL DIMENSIONS/ LEVER FOR 60 L/MIN SECTION

The lever option is designed to activate the spool manually, when the lever is pulled the flow is delivered from the port close to the lever, when it is pushed the flow is delivered from the port opposite to the lever.
The standard operation deliver full flow, in case of override operation it is possible to reduce the maximum stroke and consequently the speed, for this option contact AFT sales network.
The lever can be easily positioned vertical or horizontal by unscrewing it from the rotating shaft.

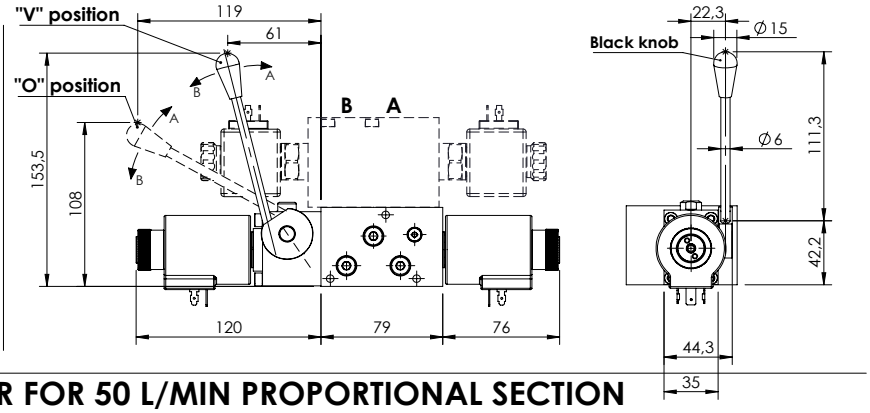

OVERALL DIMENSION/ LEVER FOR 50 L/MIN PROPORTIONAL SECTION

The lever option is designed to activate the spool manually, when the lever is pulled the flow is delivered from the port close to the lever, when it is pushed the flow is delivered from the port opposite to the lever.
The standard operation deliver full flow, in case of override operation it is possible to reduce the maximum stroke and consequently the speed, for this option contact AFT sales network.
The lever can be easily positioned vertical or horizontal by unscrewing it from the rotating shaft.

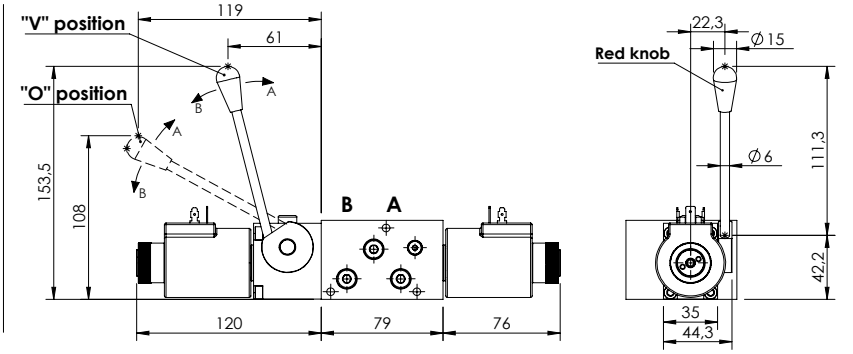

MOUNTING SCREW

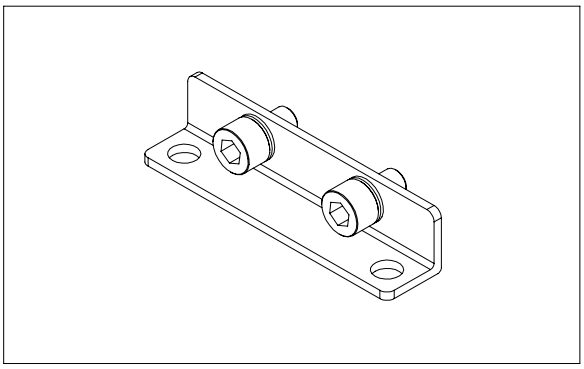

These parts are used to mount the directional valve on the application or to install modular valves and inlet section on the monoblock.

TECHNICAL DATA

Screw type	ISO 4762
Thread type	coarse thread
Standard screw	resistence class 8.8
High resistence screw	resistence class 12.9
Standard screw treatment	zinc-plated (white)
High res. screw treatment	Anodized (black)

MOUNTING BRACKETS

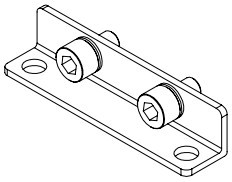

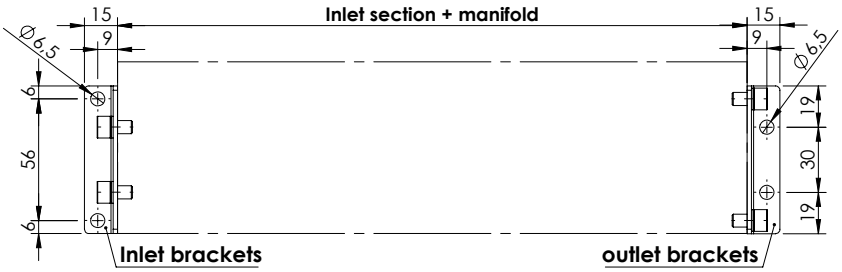

Mounting brackets	Screw lenght (mm)	Reference	Tightening Torque
PV000371	M6x10	AV000015 + PR000129	6 - 7 N/m

MOUNTING INLET SECTION

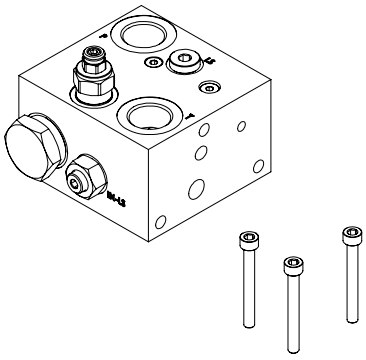

Inlet section	Screw lenght (mm)	Reference	Tightening Torque
SF000011	M6x80	AV000073	6 - 7 N/m
SF000019	M6x80	AV000073	6 - 7 N/m
SF000042	M6x75	PE000418	6 - 7 N/m
SF000045	M6x75	PE000418	6 - 7 N/m

FIXING STACKING MODULES

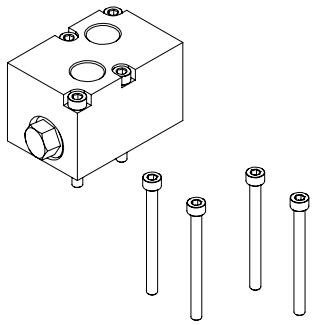

Flangiable valve	Screw lenght (mm)	Reference	Tightening Torque
MP	M5x16	AV000035	3 - 4 N/m
MA, MC and MB	M5x45	PE000148	3 - 4 N/m
KE and MF	M5x60	AV000016	3 - 4 N/m

EBP series

MONOBLOCK
PRE-COMPENSATED
LOAD SENSING VALVE
ON-OFF OR PROPORTIONAL

ATLANTIC Fluid Tech

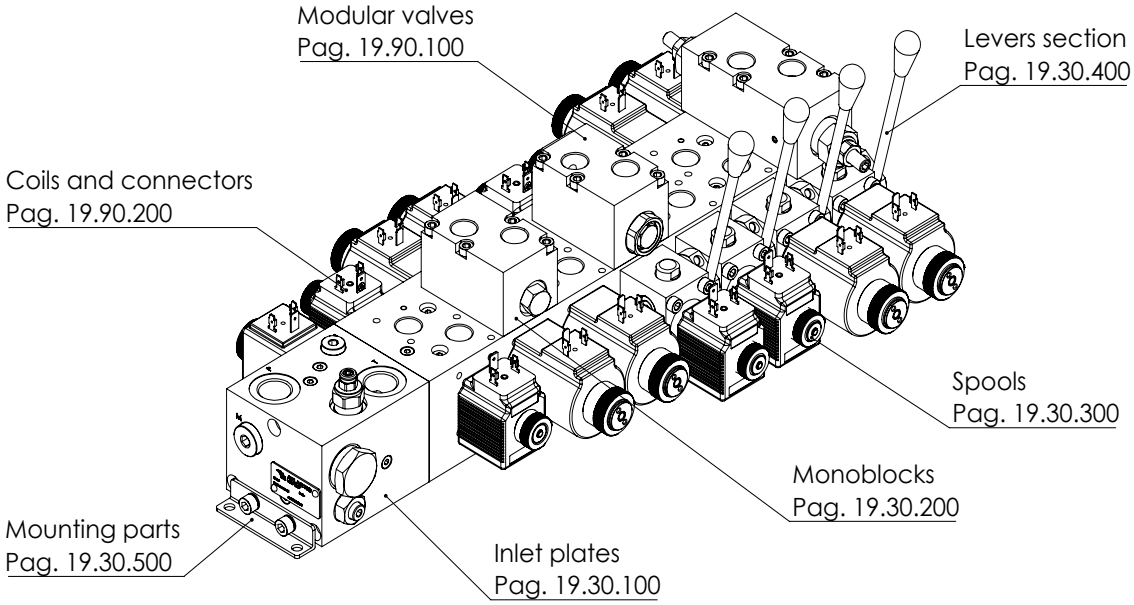

FEATURES

- Compact dimensions
- Low weight
- Custom spools
- Custom inlet blocks
- LS line on each spool section
- LS compensator on each spool section
- Sandwich valves for extra functions
- Cast iron monoblock and aluminum inlet block for standard applications
- High resistance cast iron monoblock and steel inlet block for high pressure systems
- Optional levers for manual operation
- No leak risk between sections
- Spools not under rod tension
- Zinc plated/anodized components for corrosion resistance

SPECIFICATION\DESCRIPTION

MAXIMUM OPERATING PRESSURE	Steel inlet block: 320 bar (4600 PSI) Aluminium inlet block: 210 bar (3045 PSI)
MAXIMUM TANK PRESSURE	20 bar (290 PSI)
RATED FLOW	030 series: 30 l/min (7.9 GPM) 060 series: 60l/min (15.8 GPM)
COIL POWER	030 series: 26 W 060 series: 33 W
VOLTAGE	12 V dc, 24 VDC, others on request
COIL CONNECTOR	DIN43650, AMP Junior, Deutsch DT04
PORTS	Inlet: G1/2", 1/2 JiS, 7/8-14 UNF-2B (SAE#10) Outlet: G3/8",3/8 JIS, 3/4-16 UNF-2B (SAE#8)
OPERATING TEMPERATURE	NBR (ISO 1629) seals: -30, + 80 °C FKM (ISO 1629) seals: -20, +110 °C
FILTRATION	ISO 4406 17/14 or better
MOUNTING POSITION	No restrictions
MATERIAL	Spool body: cast iron Spool: Herdened and grounded steel Inlet block: Aluminium or steel
SURFACE TREATMENT	Steel: zinc plating Aluminium: anodization

EBN series is a new directional load sensing pre-compesated valve that has innovative features in terms of performance, dimension, manufacturing reliability and customization. The valve consists in an inlet block flanged to a monoblock with spools. This construction gives the advantages of high flexibility in inlet block schemes, combined with the reliability and simplicity of monoblock spool valve construction, eliminating the risk of spools blocking due to overtightening of tie rods or the risk of leakage between sections. The spool monoblock is a 2 or 3 position, 4 ways, direct acting solenoid operated type. All sections have threaded ports at the top and removable plugs for tank connections to allow the installation of flanged blocks with additional functions like crossover reliefs, reliefs to tank, relief and anticavitations, counterbalance valves, P.O. checks, flow restrictors and flow regulators. All sections are equipped with standard push button override and they can be equipped with lever for manual use.

HOW ORDER IT

To order the separate parts please refer to each catalogue page.

To order an assembled block, contact AFT sales network specifying the part numbers following page 19.90.900 path.

For special versions please contact AFT sales network.

EBP series - INLET SECTION

SFPL-060-ZNNN-16

P, T PORTS
M PORTS

ATLANTIC Fluid Tech

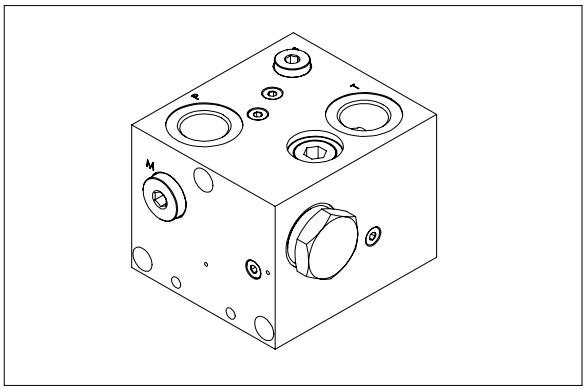

This inlet section is equipped with two thread ports (P,T) available in two different types G 1/2" or 3/4"-16 UNF plus a third threaded port M for pressure measuring available in G 1/4" or 7/16"-20. The manifold material is aluminium for applications up to 210 bar or zinc plated steel for applications up to 320 bar.

TECHNICAL DATA

Max pressure	210/320 bar
Rated flow	60 l/min
Hydraulic fluid	Mineral oil DIN 51524
Fluid viscosity	10-500 mm²/s
Fluid temperature	-25°C/75°C
Enviroment temperature	-25°C/60°C
Weight	1,2 Kg

HYDRAULIC SCHEME

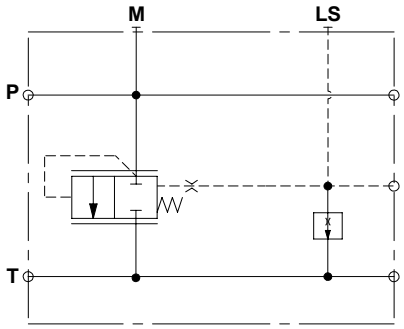

PRESSURE DROP LOGIC ELEMENT

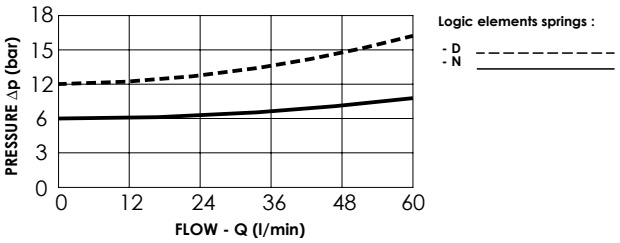

ORDERING DETAILS: SEPARATE ELEMENTS

SFPL-060-[*][*]NN-16-[***]-N

*	MATERIAL TYPE
A	Steel zinc-plated (320 bar)
Z	Aluminium anodized (210 bar)

*	LOGIC ELEMENT SPRING
D	Spring setting 12 bar (CD000103)
N	Spring setting 6 bar (CD000073)

***	PORTS		
	P line	**T** line	**M**
G12	G 1/2"	G 1/2"	G 1/4"
U34	3/4"-16 UNF	3/4"-16 UNF	7/16"-20 UNF

QUICK CODE	
DESCRIPTION	CODE
SFPL-060-ZNNN-16-G12-N	SF000048

OVERALL DIMENSIONS

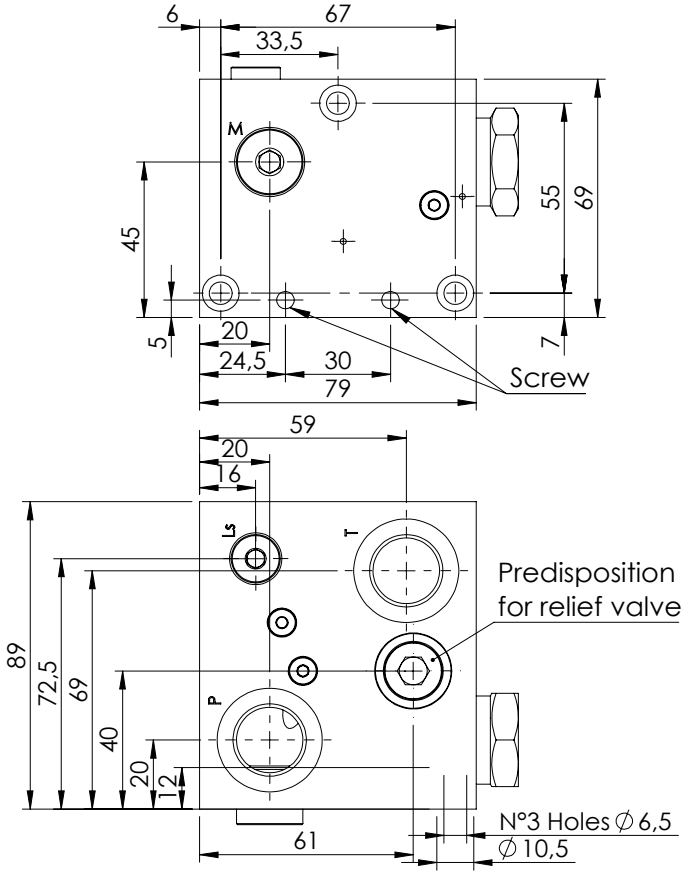

EBP series - INLET SECTION

SFPL-060-ZNNN-17

RELIEF VALVE M PORTS

ATLANTIC Fluid Tech

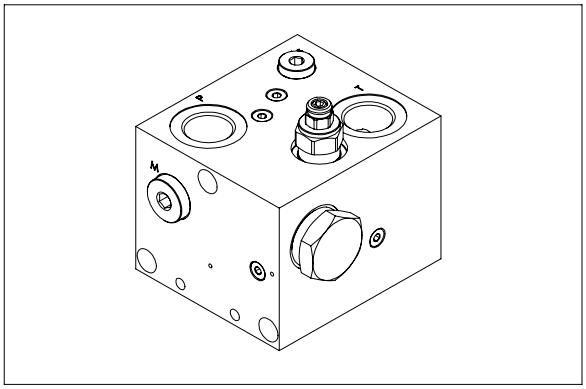

This inlet section is equipped with relief valve with adjustable setting operating on Ls signal, the adjustment is made by socket screw. This inlet section is equipped with two thread ports (P,T) available in two different types G 1/2" or 3/4"-16 UNF plus a third threaded port M for pressure measuring available in G 1/4" or 7/16"-20. The manifold material is aluminium for applications up to 210 bar or zinc plated steel for applications up to 320 bar.

TECHNICAL DATA

Max pressure	210/320 bar
Rated flow	60 l/min
Hydraulic fluid	Mineral oil DIN 51524
Fluid viscosity	10-500 mm²/s
Fluid temperature	-25°C/75°C
Enviroment temperature	-25°C/60°C
Weight	1,3 Kg

HYDRAULIC SCHEME

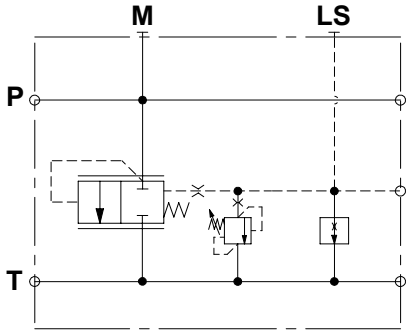

PRESSURE DROP LOGIC ELEMENT

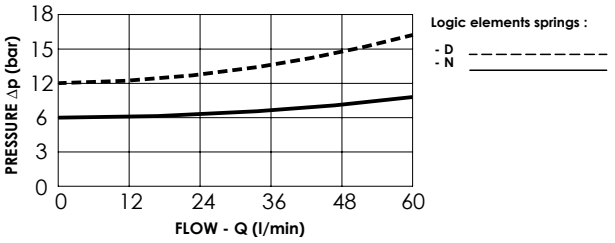

ORDERING DETAILS: SEPARATE ELEMENTS

SFPL-060-*N-17-***-N**

*	MATERIAL TYPE
A	Steel zinc-plated (310 bar)
Z	Aluminium anodized (210 bar)

*	LOGIC ELEMENT SPRING
D	Spring setting 12 bar (CD000103)
N	Spring setting 6 bar (CD000073)

*	SETTING RANGE
N	Max setting 210 bar (CP000029)
A	Max setting 110 bar (CP000030)
B	Max setting 350 bar (CP000002)

***	PORTS		
	P line	**T** line	**M**
G12	G 1/2"	G 1/2"	G 1/4"
U34	3/4"-16 UNF	3/4"-16 UNF	7/16"-20 UNF

QUICK CODE	
DESCRIPTION	CODE
SFPL-060-ZNNN-17-G12-N	SF000047

OVERALL DIMENSIONS

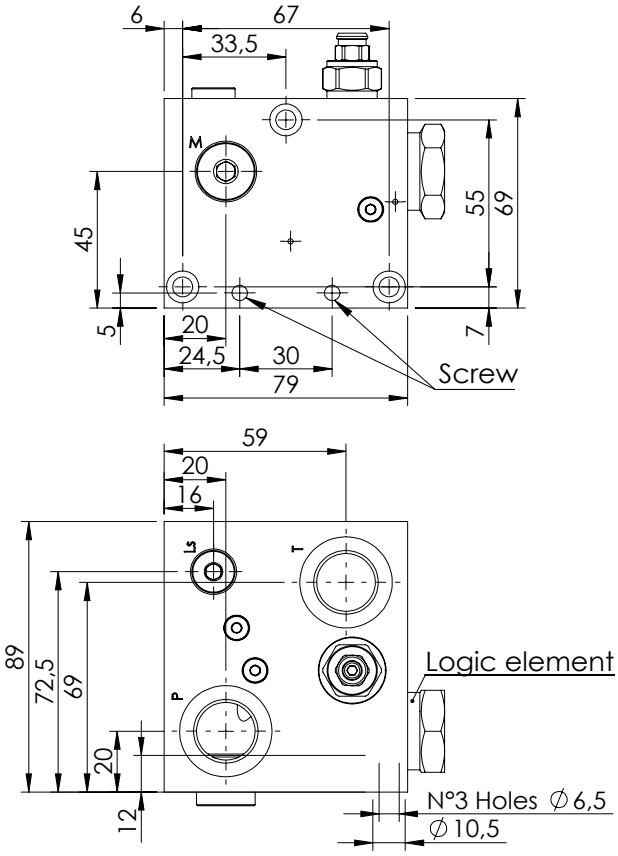

EBP series - INLET SECTION

SFPL-060-ZNNN-19

RELIEF VALVE UNLOADING VALVE

ATLANTIC Fluid Tech

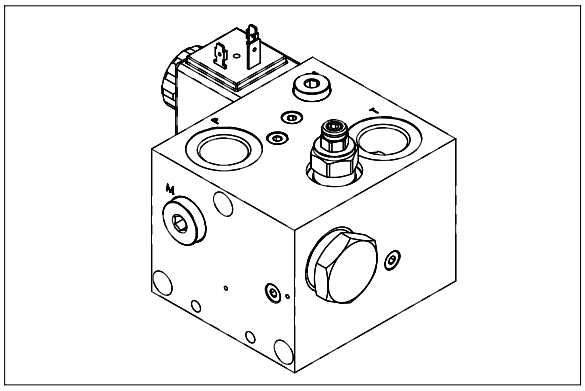

This inlet section is equipped with relief valve with adjustable setting operating on Ls signal, the adjustment is made by socket screw. It is present an unloading solenoid valve normally open with emergency operating on Ls signal. There are two thread ports (P, T) available in two different types G 1/2" or 3/4"-16 UNF plus M port available in G 1/4". Max inlet flow 60 l/min. The manifold material is aluminium for applications up to 210 bar or zinc plated steel for applications up to 320 bar.

TECHNICAL DATA

Max pressure	210/320 bar
Rated flow	60 l/min
Hydraulic fluid	Mineral oil DIN 51524
Fluid viscosity	10-500 mm²/s
Fluid temperature	-25°C/75°C
Enviroment temperature	-25°C/60°C
Weight	1,4 Kg

HYDRAULIC SCHEME

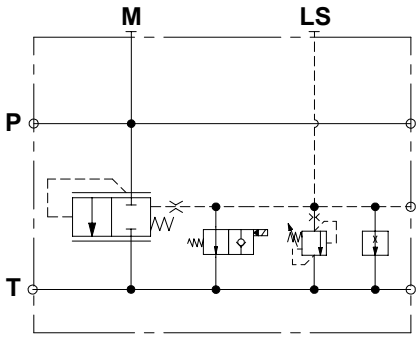

PRESSURE DROP LOGIC ELEMENT

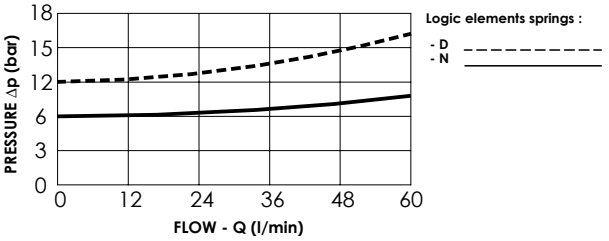

ORDERING DETAILS: SEPARATE ELEMENTS

SFPL-060-[*][*][*]N-19-[***]-[*][**]N

*	MATERIAL TYPE
A	Steel zinc-plated (320 bar)
Z	Aluminium anodized (210 bar)

*	LOGIC ELEMENT SPRING
D	Spring setting 12 bar (CD000103)
N	Spring setting 6 bar (CD000073)

*	SETTING RANGE
N	Max setting 210 bar (CP000029)
A	Max setting 110 bar (CP000030)
B	Max setting 350 bar (CP000002)

***	PORTS		
	P line	**T** line	**M**
G12	G 1/2"	G 1/2"	G 1/4"
U34	3/4"-16 UNF	3/4"-16 UNF	7/16"-20 UNF

*	VOLTAGE
	no coils
A	12 V DC
B	24 V DC

**	COILS TYPE
	no coils
HR	Hirshmann (ISO 4400 DIN 43650)
DT	Deutsch (DT04-2P)
AJ	Amp junior (AJ type)

QUICK CODE	
DESCRIPTION	CODE
SFPL-060-ZNNN-19-G12-N	SF000046
Unloading valve	CE000873

OVERALL DIMENSIONS

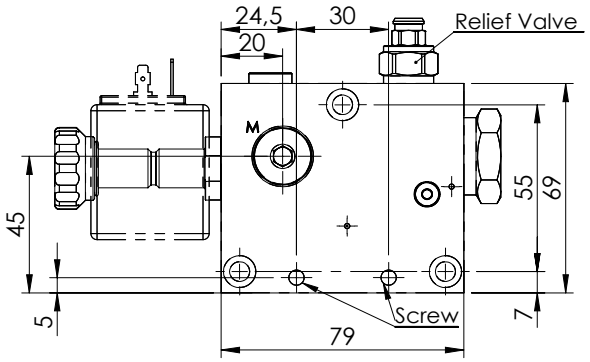

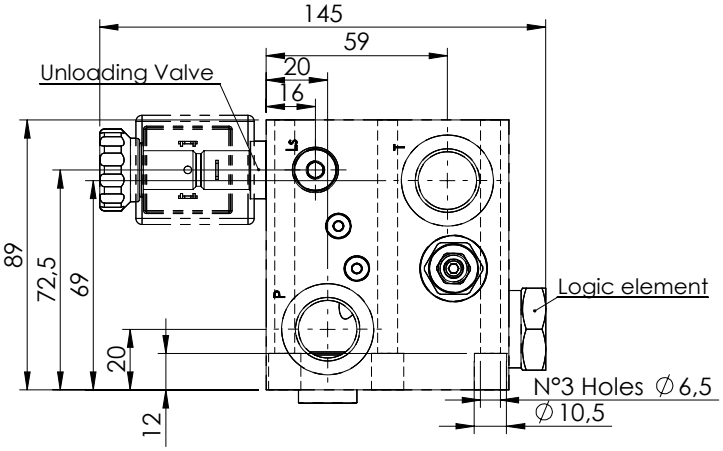

EBP series - INLET SECTION

SFPL-060-ZNNN-20

RELIEF VALVE
UNLOADING VALVE WITH
EXTERNAL OR INTERNAL LS

ATLANTIC Fluid Tech

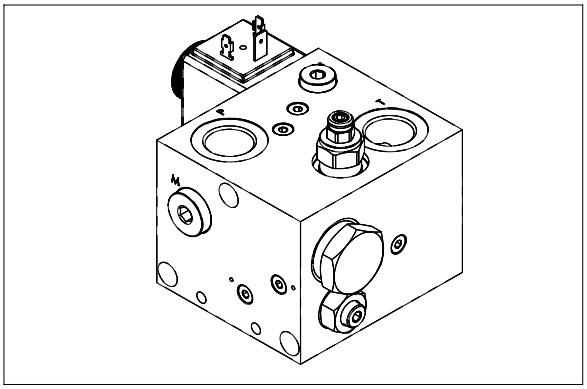

This inlet section is equipped with relief valve with adjustable setting operating on Ls signal, the adjustment is made by socket screw.It is present an unloading compensator normally closed operating with Ls signal.
There are two thread ports (P, T) available in two different types G 1/2" or 3/4"-16 UNF plus M port available in G 1/4".
Max inlet flow 60 l/min. The manifold material is aluminium for applications up to 210 bar or zinc plated steel for applications up to 320 bar.

TECHNICAL DATA

Max pressure	210/320 bar
Rated flow	60 l/min
Hydraulic fluid	Mineral oil DIN 51524
Fluid viscosity	10-500 mm²/s
Fluid temperature	-25°C/75°C
Enviroment temperature	-25°C/60°C
Weight	1,4 Kg

HYDRAULIC SCHEME

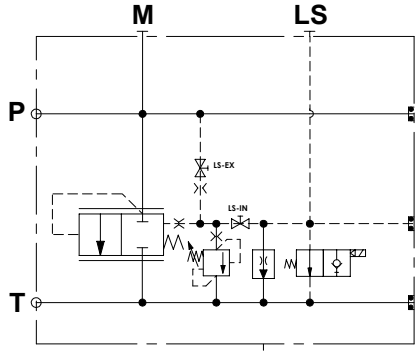

PRESSURE DROP LOGIC ELEMENT

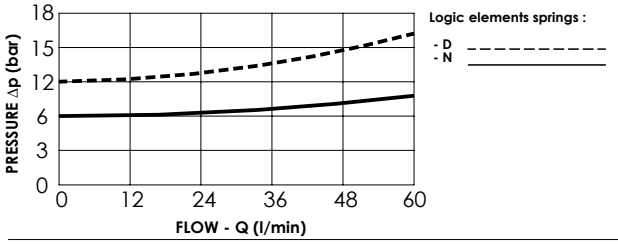

ORDERING DETAILS: SEPARATE ELEMENTS

SFPL-060-[*][*][*]N-20-[***]-[*][**]N

*	MATERIAL TYPE
A	Steel zinc-plated (320 bar)
Z	Aluminium anodized (210 bar)

*	LOGIC ELEMENT SPRING
D	Spring setting 12 bar (CD000103)
N	Spring setting 6 bar (CD000073)

*	SETTING RANGE
N	Max setting 210 bar (CP000029)
A	Max setting 110 bar (CP000030)
B	Max setting 350 bar (CP000002)

***	PORTS		
	P line	**T** line	**M**
G12	G 1/2"	G 1/2"	G 1/4"
U34	3/4"-16 UNF	3/4"-16 UNF	7/16"-20 UNF

*	VOLTAGE
	no coils
A	12 V DC
B	24 V DC

**	COILS TYPE
	no coils
HR	Hirshmann (ISO 4400 DIN 43650)
DT	Deutsch (DT04-2P)
AJ	Amp junior (AJ type)

QUICK CODE	
DESCRIPTION	CODE
SFPL-060-ZNNN-20-G12-N	SF000041
Unloading valve	CE000873

OVERALL DIMENSIONS

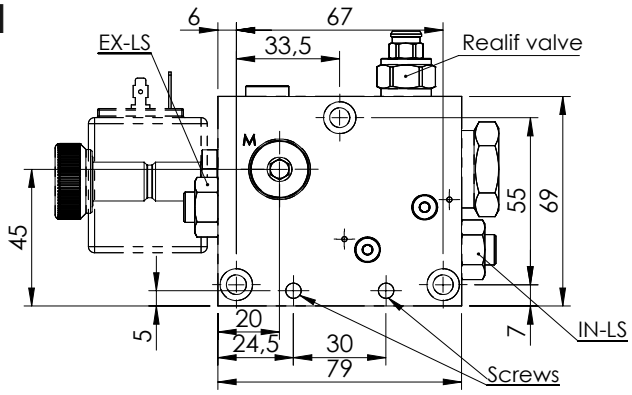

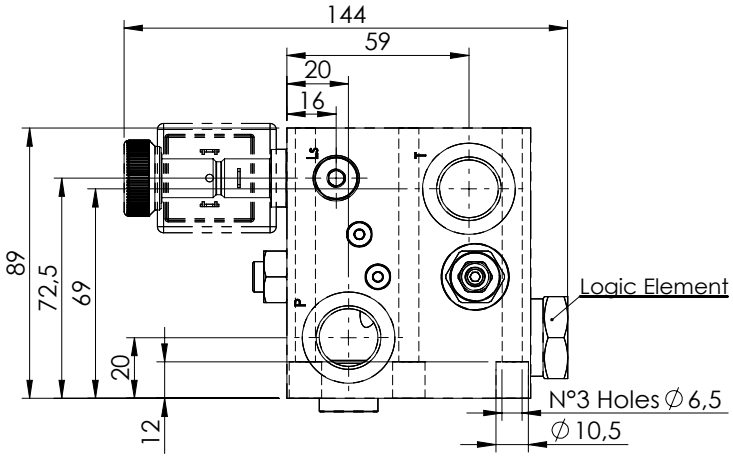

EBP series - MONOBLOCK

LDPP-060-NNNN

CAST-IRON MANIFOLD

ATLANTIC Fluid Tech

In LDPP/S-060-C plug are included in the manifold

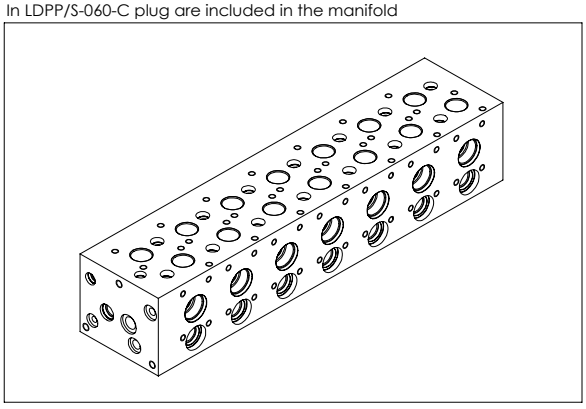

The manifold's valve can be ordered with 3 types of ports for connection nipples G 3/8" 9/16"-18 UNF (SAE6) and M16x1,5. Standard version is G 3/8" for other type of ports we will mounting flangiable elemtens it change G 3/8" to 9/16"-18 UNF (SAE6) or M16x1,5 (can look that in dimension drawing). Manifold it's made in cast-iron with zinc-plated (black) surface treatment with sealant. It isn't a modular block for reduce to minimun the leakage throught the section and also for haven't problem with screw torque. Also can easely open, remuving plug, extra T connection for different kind of use such as modular valve flangiable on distributor.

TECHNICAL DATA

Max pressure	320 bar
Rated flow	60 l/min
Material	Cast-iron
Surface treatment	Zinc-plated black
Weight for single section	2,5 kg
Wight for additional sections	+ 1,5 Kg each

ORDERING DETAILS: SEPARATE ELEMENTS

LDP [*] - 060 - NNNN - [**] - [***]

*	TYPE OF MANIFOLD
S	Series connection
P	Parallel connection

**	NUMBER OF SECTION
01	manifold with one section
02	manifold with two sections
03	manifold with three sections
04	manifold with four sections
05	manifold with five sections
06	manifold with six sections
07	manifold with seven sections

***	PORTS		
	P line	**T** line	**M**
G38	G 3/8"	G 3/8"	G 1/4"
U09	9/16"-18 UNF	9/16"-18 UNF	7/16"-20 UNF

QUICK CODE	
DESCRIPTION	CODE
LDPP-060-NNNN-01-G12	LD000289
LDPP-060-NNNN-02-G12	LD000293
LDPP-060-NNNN-03-G12	LD000292
LDPP-060-NNNN-04-G12	LD000291
LDPP-060-NNNN-05-G12	LD000290
LDPP-060-NNNN-06-G12	LD000279
LDPP-060-NNNN-07-G12	LD000284

MANIFOLD CONFIGURATIONS

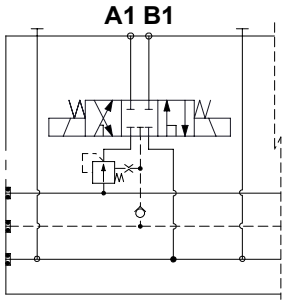

LDPP-060

MONOBLOCK PRESSURE DROP

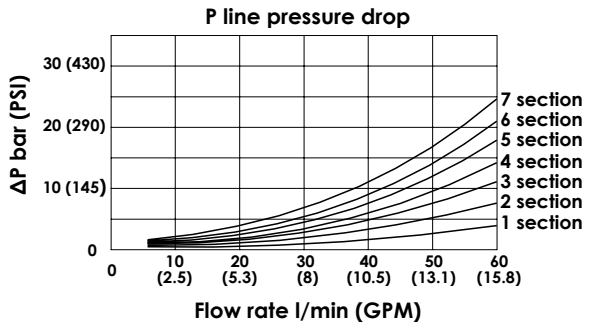

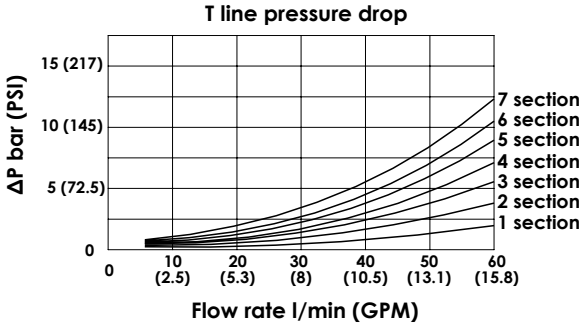

EBP series - MONOBLOCK

LDPP-060-NNNN

CAST-IRON MANIFOLD

ATLANTIC Fluid Tech

GAS VERSION

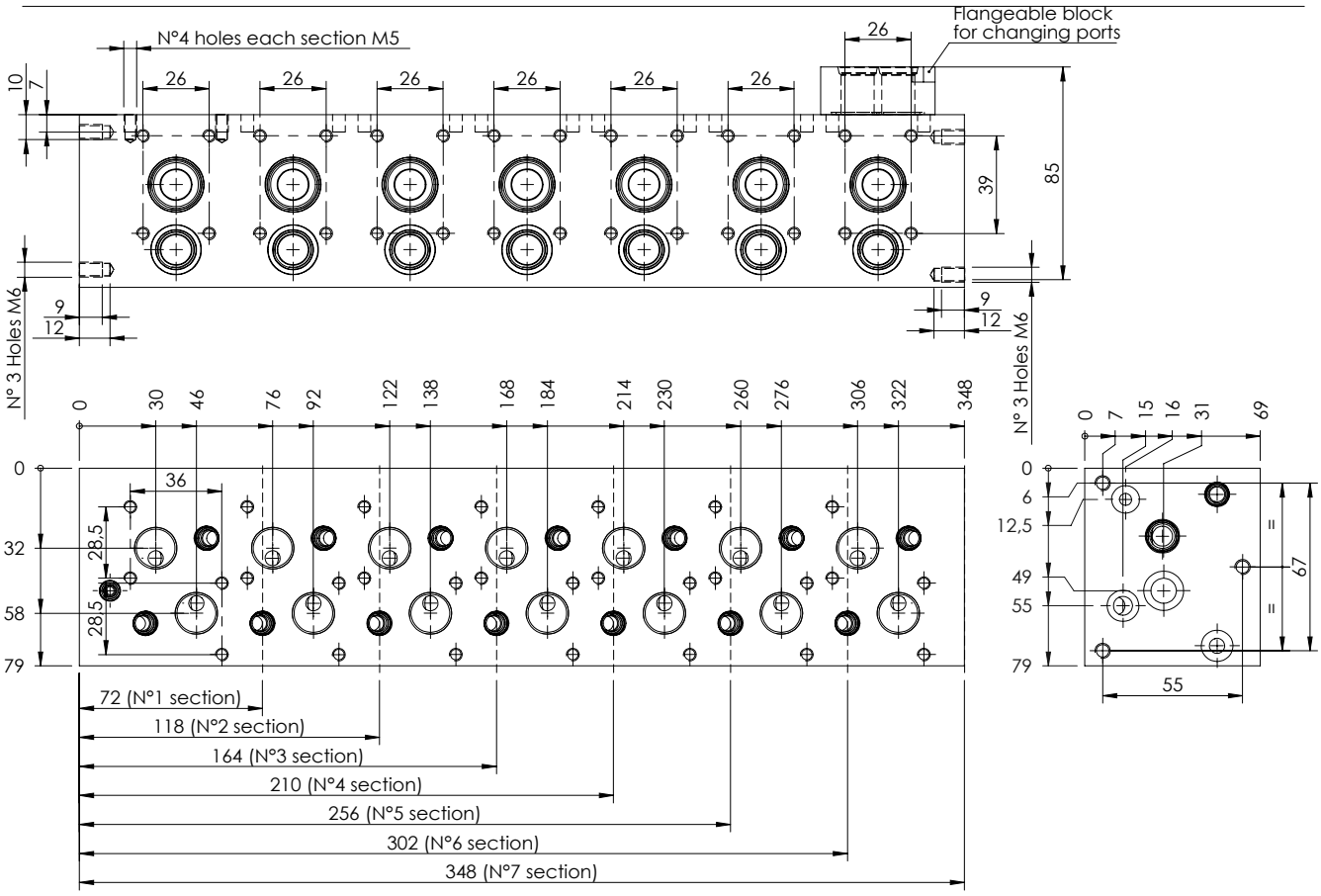

SAE VERSION

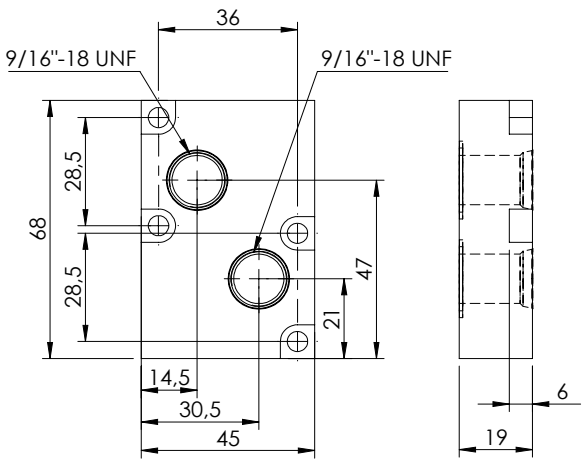

This top flangeable block transform the monoblock to a UNF version.

Quick code: MP000096

METRIC VERSION

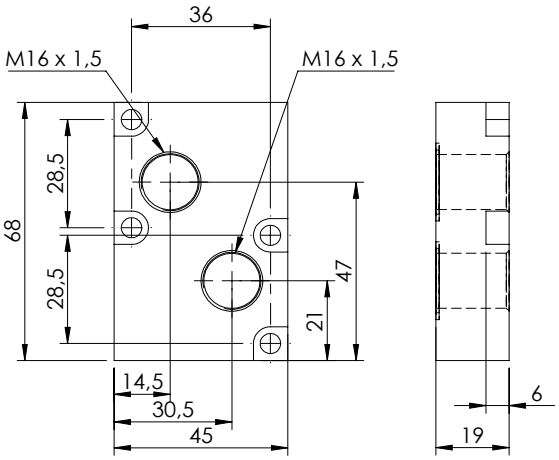

This top flangeable block transform the monoblock to a Metric version.

Quick code: MP000097

EBP series - SPOOL SECTION

SHNE-030-LSON

30 L/MIN SOLENOID VALVE

ATLANTIC Fluid Tech

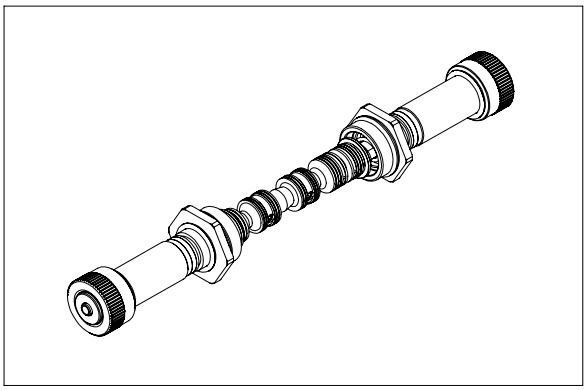

This spool group is rated for 30 lpm and for a maximum pressure of 320 bar; the spool is actuated by on off tubes and can be ordered with different hydraulic schemes.
Each spools is interchangeable to give maximum flexibility and can be fit in all monoblock sections, changing spools require adequate training.
The group is made by two tubes, one spool, two springs and mounting components.

TECHNICAL DATA

Max pressure	320 bar
Rated flow	30 l/min
Max excitation frequency	3 Hz
Duty cycle	100 % ED
Hydraulic fluid	Mineral oil DIN 51524
Fluid viscosity	10/500 mm²/s
Fluid temperature	-25°C/75°C
Enviroment temperature	-25°C/60°C
Weight with one solenoid	0,12 Kg
Weight with two solenoid	0,15 kg

ORDERING DETAILS: SEPARATE ELEMENTS

SH * * - 030 - LS ** - ** -396 - * **N

*	OVERRIDE TYPE
N	Standard
P	Push
V	Screw

*	SECTION TYPE
E	Solenoid operated
L	Solenoid operated plus lever operated
M	Lever operated

**	ACTUATION TYPE
ON	On/Off
SS	Soft shift

**	SPOOL TYPE
...	See table n°1

*	COILS VOLTAGE
	no coils
A	12 V DC
B	24 V DC

**	COILS TYPE
	no coils
HR	Hirschmann (ISO 4400 DIN 43650)
DT	Deutshc (DT04-2P)
AJ	Amp Junior (AJ type)

QUICK CODE	
DESCRIPTION	CODE
SHNE-030-LSON-74-396	
SHNE-030-LSON-75-396	

HYDRAULIC SYMBOLS

Table n°1

SPOOL CODE	HYDRAULIC SCHEME	TRANSITORY POSITION
74	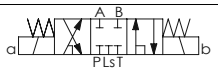	
75	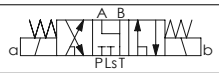	

SPOOL CODE		HYDRAULIC SCHEME		TRANSITORY POSITION	
a	**b**	**a**	**b**	**a**	**b**

OVERRIDE TYPE

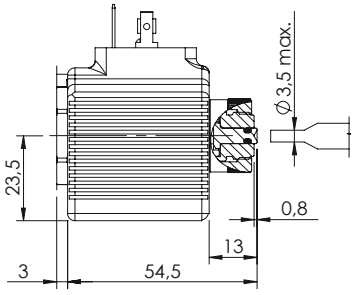

OVERRIDE TYPE "N"

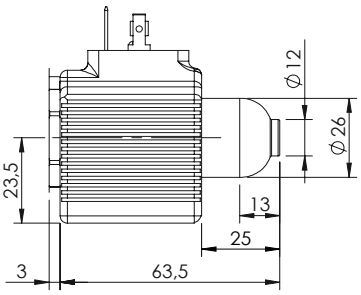

OVERRIDE TYPE "P"

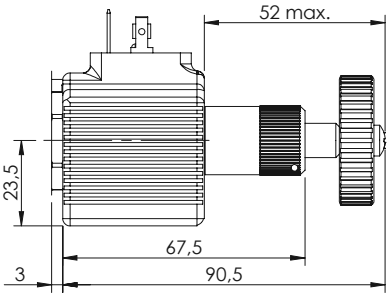

OVERRIDE TYPE "V"

SHNE-030-LSON

30 L/MIN SOLENOID VALVE

ATLANTIC Fluid Tech

PERFORMANCE LIMITS CURVES - STANDARD SECTION

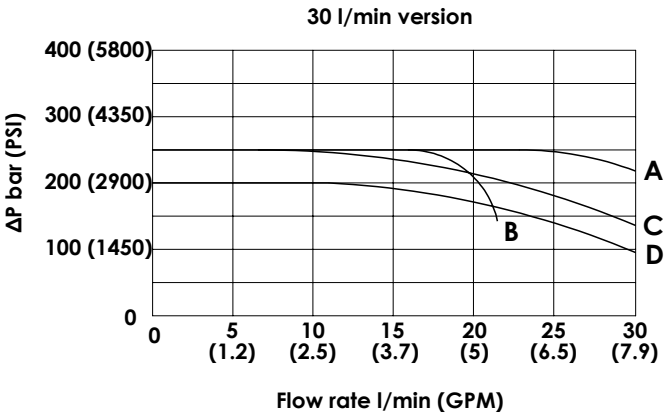

Spool type	Performance limits curve
74	A
75	A
	B
	A
	A
	A
	C
	D

The tests are carried out with hot solenoids , powered with 90 % of nominal voltage, with 50 ° C fluid temperature.
The fluid used is mineral oil having a viscosity of 46 mm² / s @ 40 ° C .
The values in the diagram refer to tests carried out with flow simultaneously in both directions (P > A, B > T).
In cases of schemes 4/2 or 4/3 used with the flow in one direction only the performance can change.

PRESSURE DROP CURVES - STANDARD SECTION

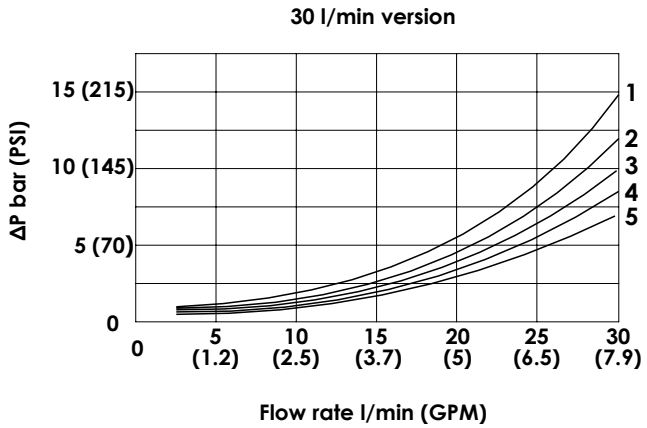

Spool type	Pressure drop curve				
	P>A	P>B	A>T	B>T	P>T
74	3	3	4	4	/
75	3	3	5	5	/
	2	2	1	1	2
	/	3	4	/	/
	/	3	5	/	/
	2	/	/	1	/
	/	3	4	/	/
	/	2	3	/	/

The diagram shows the performance limit curve of standard section. The fluid used is mineral oil viscosity 46 mm²/s at 40 °C ; the tests are performed at a 40 °C temperature

OVERALL DIMENSION - STANDARD SECTION

In case of top modular valve MA or MC type installation the coil connection can be faced to the top or to the bottom of the block. (See modular valve section)

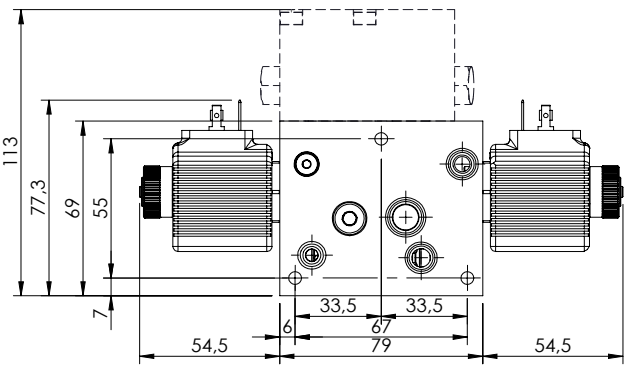

In case of top modular valve MB, KE and KF type installation the coil connection can be faced only to the bottom of the block. (See modular valve section)

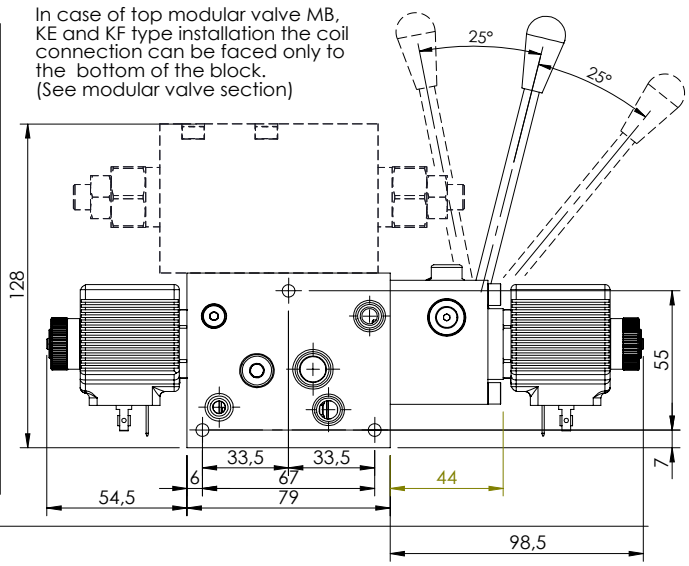

EBP series - SPOOL SECTION

SHNE-060-LSON

60 L/MIN SOLENOID VALVE

ATLANTIC Fluid Tech

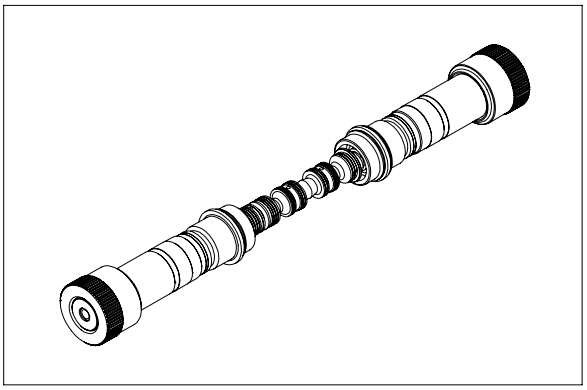

This spool group is rated for 60 lpm and for a maximum pressure of 320 bar; the spool is actuated by on off tubes and can be ordered with different hydraulic schemes.
Each spools is interchangeable to give maximum flexibility and can be fit in all monoblock sections, changing spools require adequate training.
The group is made by two tubes, one spool, two springs and mounting components.

TECHNICAL DATA

Max pressure	320 bar
Rated flow	60 l/min
Max excitation frequency	3 Hz
Duty cycle	100 % ED
Hydraulic fluid	Mineral oil DIN 51524
Fluid viscosity	10/500 mm²/s
Fluid temperature	-25°C/75°C
Enviroment temperature	-25°C/60°C
Weight with one solenoid	0,2 Kg
Weight with two solenoid	0,4 kg

ORDERING DETAILS: SEPARATE ELEMENTS

SH * * - 060 - LS ** - ** -396- * ** N

*	OVERRIDE TYPE
N	Standard
P	Push
V	Screw

*	SECTION TYPE
E	Solenoid operated
L	Solenoid operated plus lever operated
M	Lever operated

**	ACTUATION TYPE
ON	On/Off
SS	Soft shift

**	SPOOL TYPE
...	See table n°1

*	COILS VOLTAGE
	no coils
A	12 V DC
B	24 V DC

**	COILS TYPE
	no coils
HR	Hirschmann (ISO 4400 DIN 43650)
DT	Deutshc (DT04-2P)
AJ	Amp Junior (AJ type)

QUICK CODE	
DESCRIPTION	CODE
SHNE-060-LSON-74-396	
SHNE-060-LSON-75-396	

HYDRAULIC SYMBOLS

Table n°1

SPOOL CODE	HYDRAULIC SCHEME	TRANSITORY POSITION
74	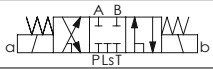	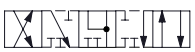
75	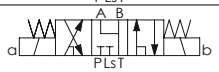	

SPOOL CODE		HYDRAULIC SCHEME		TRANSITORY POSITION	
a	**b**	**a**	**b**	**a**	**b**

OVERRIDE TYPE

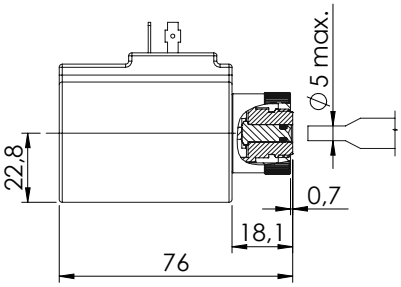

OVERRIDE TYPE "N"

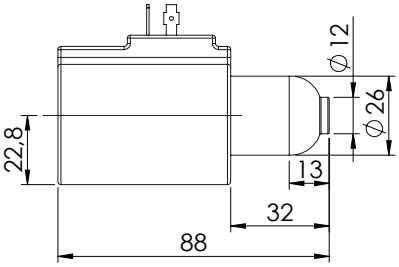

OVERRIDE TYPE "P"

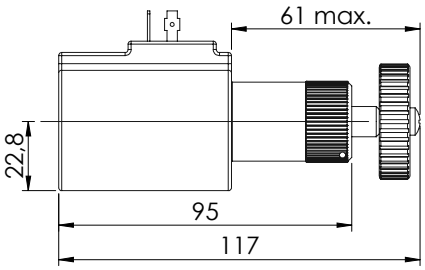

OVERRIDE TYPE "V"

SHNE-060-LSON

60 L/MIN SOLENOID VALVE

ATLANTIC Fluid Tech

PERFORMANCE LIMIT CURVES - STANDARD SECTION

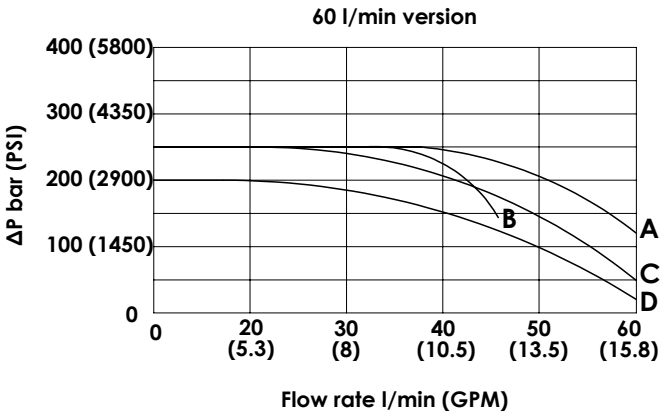

Spool type	Performance limits curve
74	A
75	A
	B
	A
	A
	A
	C
	D

The tests are carried out with hot solenoids , powered with 90 % of nominal voltage, with 50 ° C fluid temperature.
The fluid used is mineral oil having a viscosity of 46 mm² / s @ 40 ° C .
The values in the diagram refer to tests carried out with flow simultaneously in both directions (P > A, B > T).
In cases of schemes 4/2 or 4/3 used with the flow in one direction only the performance can change.

PRESSURE DROP CURVES - STANDARD SECTION

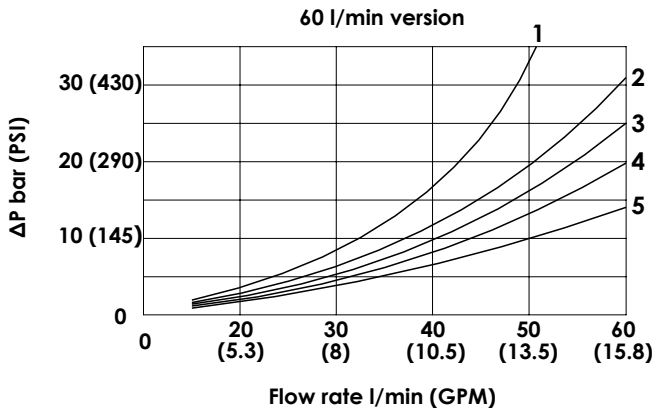

Spool type	Pressure drop curve				
	P>A	P>B	A>T	B>T	P>T
74	3	3	4	4	/
75	3	3	5	5	/
	2	2	1	1	2
	/	3	4	/	/
	/	3	5	/	/
	2	/	/	1	/
	/	3	4	/	/
	/	2	3	/	/

The diagram shows the performance limit curve of standard section. The fluid used is mineral oil viscosity 46 mm²/s at 40 °C ; the tests are performed at a 40 °C temperature

OVERALL DIMENSION - STANDARD SECTION

In case of top modular valve MA or MC type installation the coil connection can be faced to the top or to the bottom of the block. (See modular valve section)

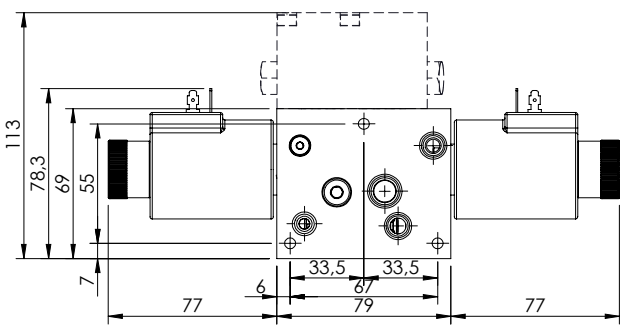

In case of top modular valve MB, KE and KF type installation the coil connection can be faced only to the bottom of the block. (See modular valve section)

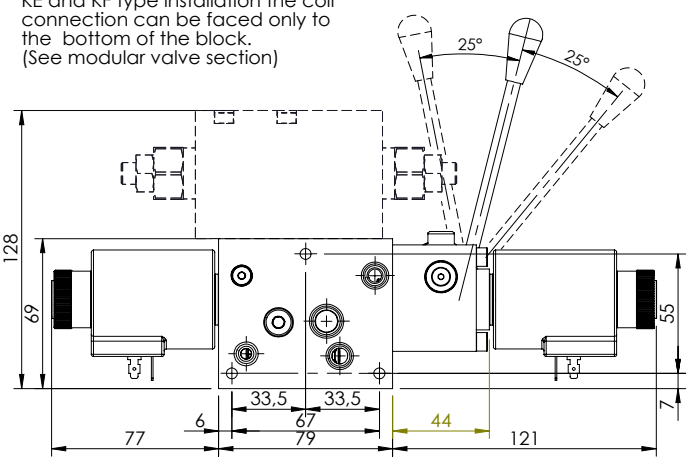

EBP series - SPOOL SECTION

SHNE-050-LSPR

50 L/MIN PROPORTIONAL SOLENOID VALVE

ATLANTIC Fluid Tech

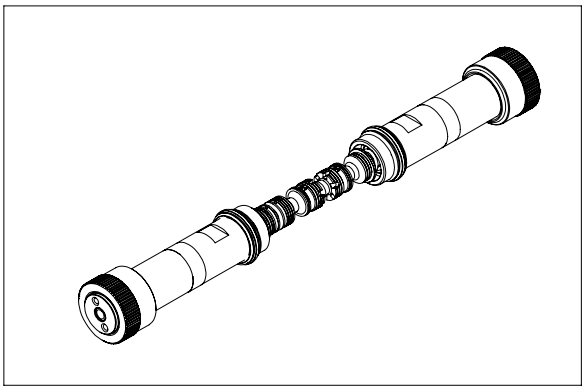

This spool group is rated for 50 lpm and for a maximum pressure of 320 bar; the spool is actuated by proportional tubes and can be ordered with different hydraulic schemes. Each spools is interchangeable to give maximum flexibility and can be fit in all monoblock sections, changing spools require adequate training.
The group is made by two tubes, one spool, two springs and mounting components.

TECHNICAL DATA

Max pressure	320 bar
Rated flow	50 l/min
Max excitation frequency	3 Hz
Duty cycle	100 % ED
Max current	1.76A(12 V dc) 0.88A (24 V dc)
Hydraulic fluid	Mineral oil DIN 51524
Fluid viscosity	10/500 mm²/s
Fluid temperature	-25°C/75°C
Enviroment temperature	-25°C/60°C
Weight with one solenoid	0,2 Kg
Weight with two solenoid	0,4 kg

ORDERING DETAILS: SEPARATE ELEMENTS

SH[*][*]-0[**]-LSPR-[**]-396-[*][**]N

*	OVERRIDE TYPE
N	Standard
P	Push
V	Screw

*	SECTION TYPE
E	Solenoid operated
L	Solenoid operated plus lever operated
M	Lever operated

**	SPOOL FLOW
20	20 l/min at 12 bar - 10 l/min at 6 bar
35	35 l/min at 12 bar - 20 l/min at 6 bar
50	50 l/min at 12 bar - 30 l/min at 6 bar

**	SPOOL TYPE
...	See table n°1

*	COILS VOLTAGE
	no coils
A	12 V DC
B	24 V DC

**	COILS TYPE
	no coils
HR	Hirschmann (ISO 4400 DIN 43650)
DT	Deutshc (DT04-2P)
AJ	Amp Junior (AJ type)

QUICK CODE	
DESCRIPTION	CODE
SHNE-030-LSPR-77-396	
SHNE-030-LSPR-78-396	

TECHNICAL FEATURES

Proportionl type	Spool flow	Rated flow with 12 bar ΔP	Maximum flow	Max. operating pressure
All	**20**	15	20	320
All	**35**	30	35	320
All	**50**	45	50	320

Proportionl type	Spool flow	Rated flow with 6 bar ΔP	Maximum flow	Max. operating pressure
All	**20**	10	15	320
All	**35**	20	25	320
All	**50**	30	35	320

HYDRAULIC SYMBOLS

Table n°1

SPOOL CODE	HYDRAULIC SCHEME	TRANSITORY POSITION
77	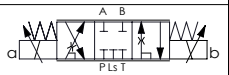	
78	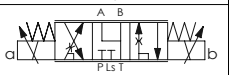	

OVERRIDE TYPE

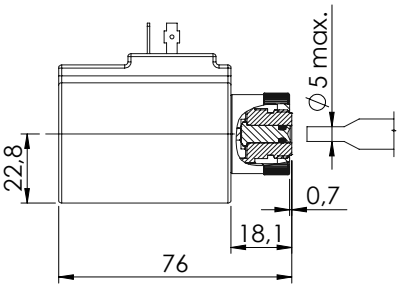

OVERRIDE TYPE "N"

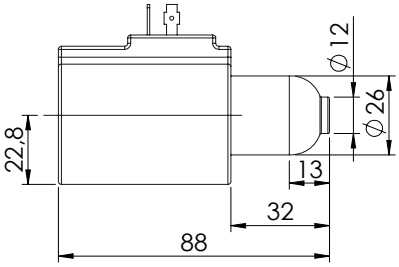

OVERRIDE TYPE "P"

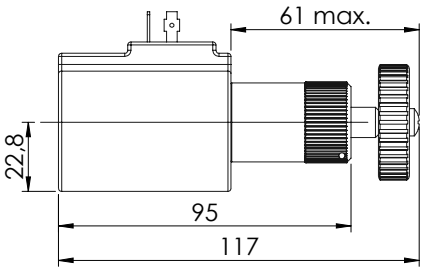

OVERRIDE TYPE "V"

EBP series - SPOOL SECTION

SHNE-050-LSPR

50 L/MIN PROPORTIONAL SOLENOID VALVE

ATLANTIC Fluid Tech

FLOW DIAGRAM - 050

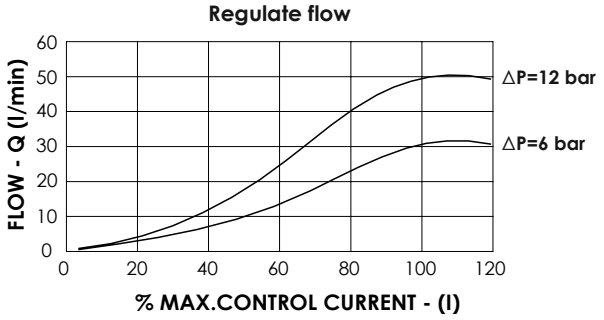

COMPESATION DIAGRAM - 050

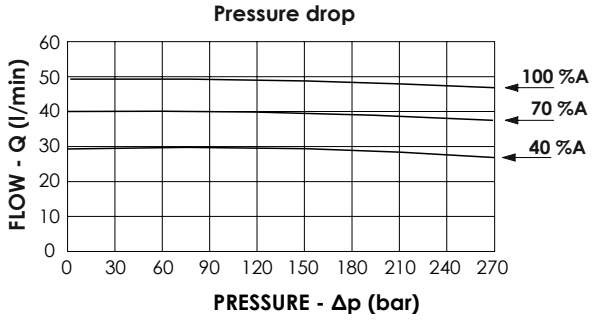

FLOW DIAGRAM - 035

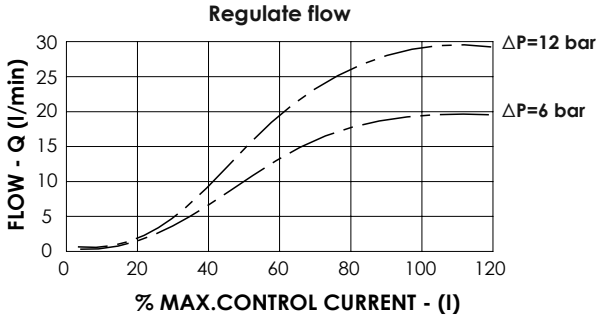

COMPENSATION DIAGRAM - 035

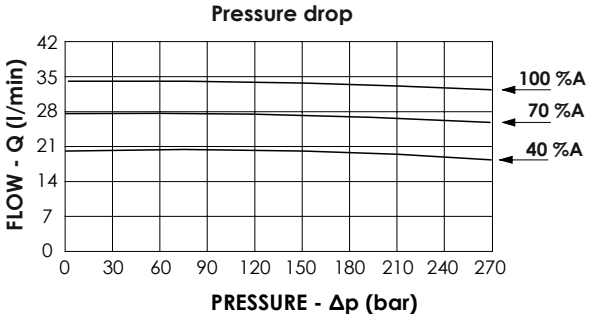

FLOW DIAGRAM - 020

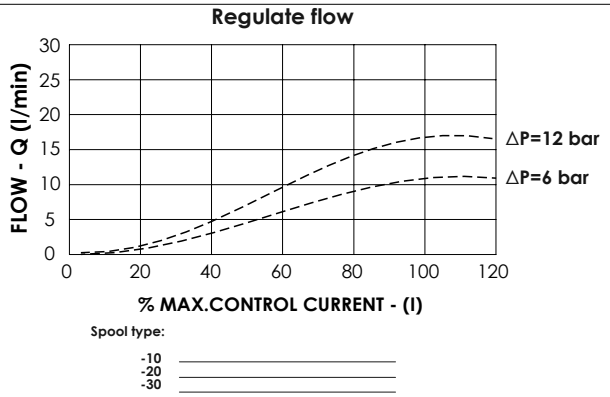

COMPENSATION DIAGRAM - 020

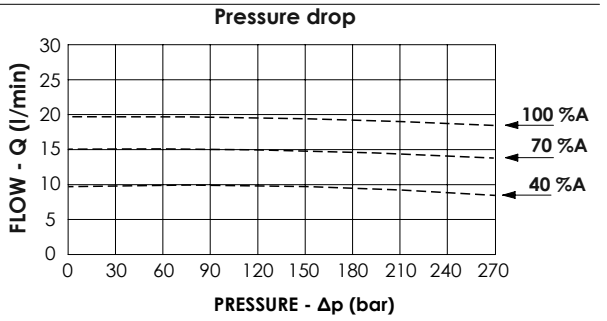

In the diagram shows the performance limits curves of standard section. The fluid used is mineral oil viscosity 46 mm²/s at 40 °C ; the tests were performed at a 40 °C temperature

OVERALL DIMENSION - STANDARD SECTION

In case of top modular valve MA or MC type installation the coil connection can be faced to the top or to the bottom of the block. (See modular valve section)

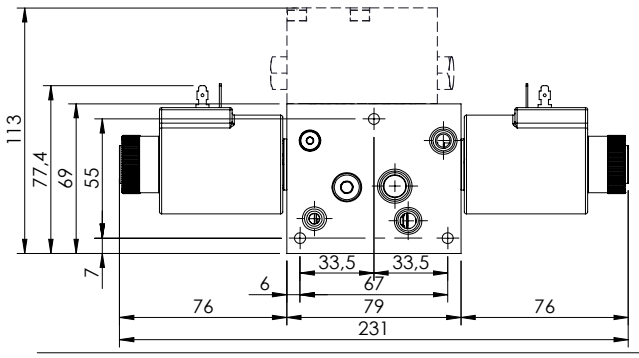

In case of top modular valve MB, KE and KF type installation the coil connection can be faced only to the bottom of the block. (See modular valve section)

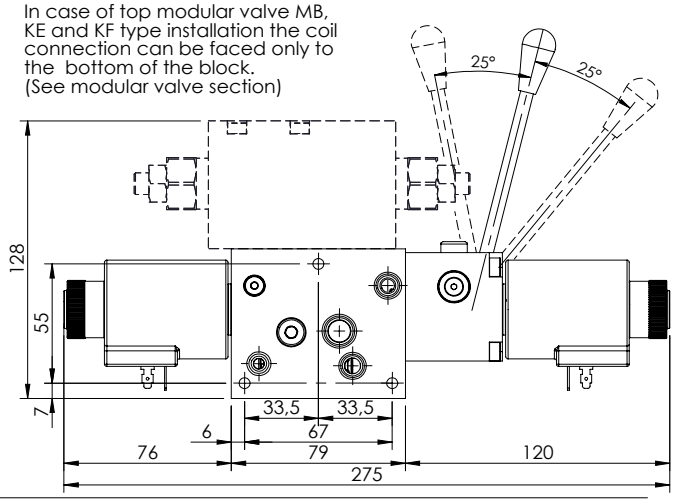

MANUAL LEVER

ATLANTIC Fluid Tech

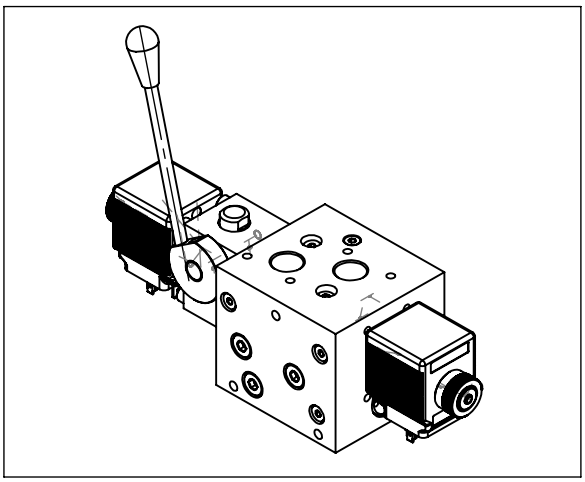

The lever option allow to operate manually the spool and can be ordered for all hydraulic schemes; in the standard version it is installed between monoblock and B port side coil.
The lever is normally installed on the monoblock port side but can be installed also rotated of 180°; , in each of these two positions the lever can be mounted vertical or horizontal simply removing the lever and reinstalling.
The lever is not engaged during solenoid operation and doesn't move when a coil is energized.

TECHNICAL DATA

Max pressure	210/320 bar
Max pressure in line type	210 bar
Rated flow	30/60 l/min
Insertion	100 % ED
Weight more than standard	3 Kg
Weight more than standard	3,5 kg

OVERALL DIMENSIONS/ LEVER FOR 30 L/MIN SECTION

The lever option is designed to activate the spool manually, when the lever is pulled the flow is delivered from the port close to the lever, when it is pushed the flow is delivered from the port opposite to the lever.
The standard operation deliver full flow, in case of override operation it is possible to reduce the maximum stroke and consequently the speed, for this option contact AFT sales network.
The lever can be easily positioned vertical or horizontal by unscrewing it from the rotating shaft.

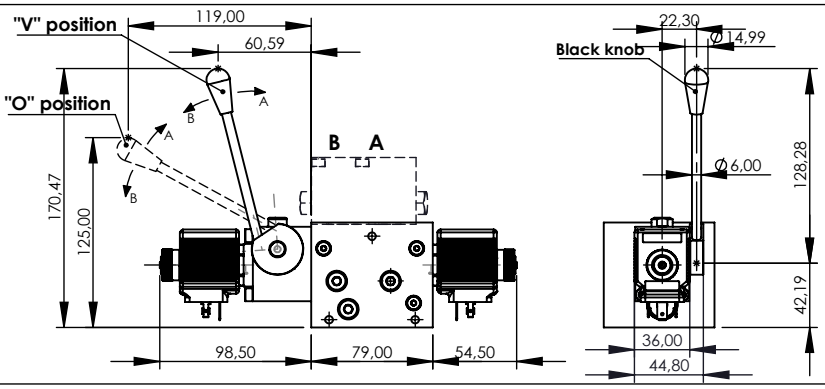

OVERALL DIMENSIONS/ LEVER FOR 60 L/MIN SECTION

The lever option is designed to activate the spool manually, when the lever is pulled the flow is delivered from the port close to the lever, when it is pushed the flow is delivered from the port opposite to the lever.
The standard operation deliver full flow, in case of override operation it is possible to reduce the maximum stroke and consequently the speed, for this option contact AFT sales network.
The lever can be easily positioned vertical or horizontal by unscrewing it from the rotating shaft.

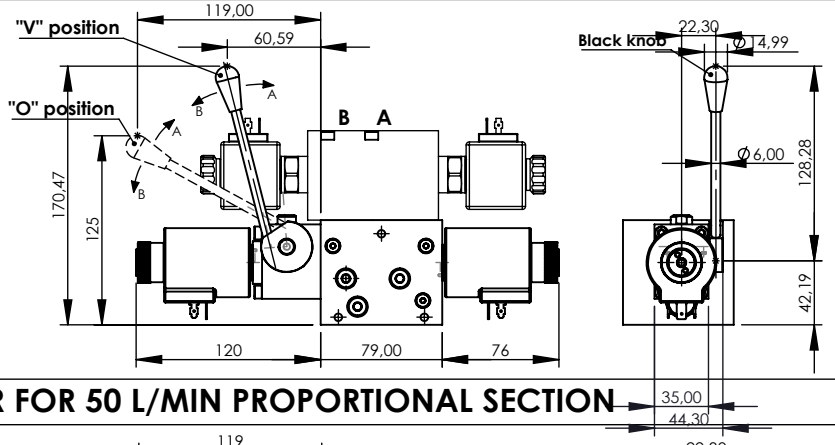

OVERALL DIMENSION/ LEVER FOR 50 L/MIN PROPORTIONAL SECTION

The lever option is designed to activate the spool manually, when the lever is pulled the flow is delivered from the port close to the lever, when it is pushed the flow is delivered from the port opposite to the lever.
The standard operation deliver full flow, in case of override operation it is possible to reduce the maximum stroke and consequently the speed, for this option contact AFT sales network.
The lever can be easily positioned vertical or horizontal by unscrewing it from the rotating shaft.

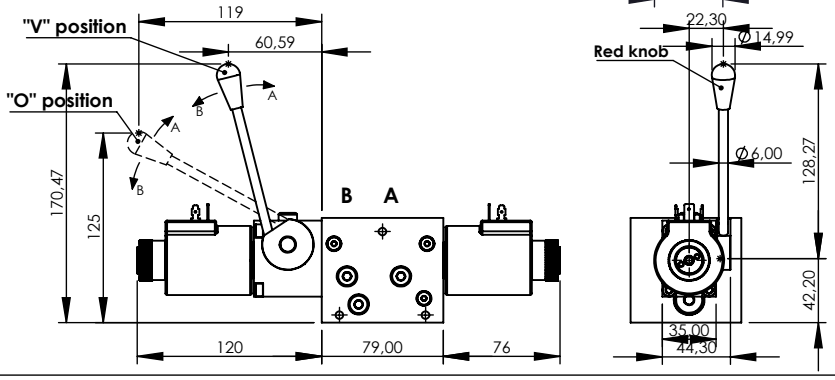

MOUNTING SCREW

ATLANTIC Fluid Tech

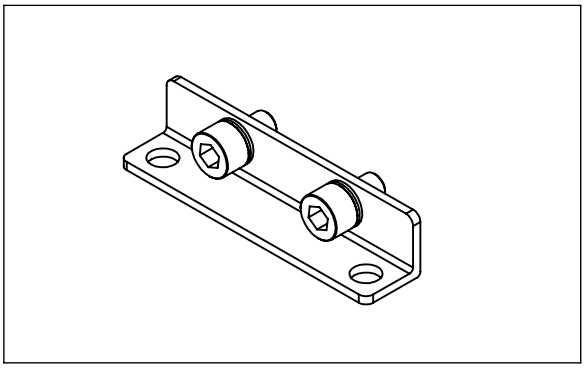

This accessories it use for mounting and fixing distributor on machine, in case the mounting brackets, or for mounting the different componets who assemble the whole distributor.

TECHNICAL DATA

Screw type	ISO 4762
Thread type	coarse thread
Standard screw	resistence class 8.8
High resistence screw	resistence class 12.9
Standard screw treatment	zinc-plated (white)
High res. screw treatment	Anodized (black)

MOUNTING BRACKETS

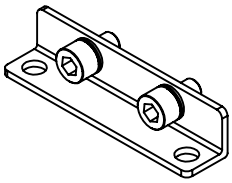

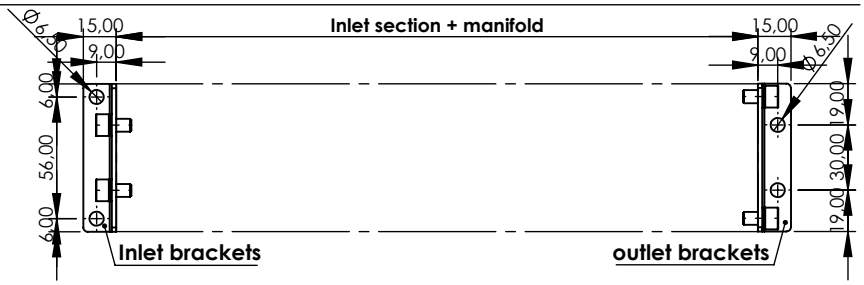

Mounting brackets	Screw lenght (mm)	Reference	Tightening Torque
PV000371	M6x10	AV000015 + PR000129	6 - 7 N/m

MOUNTING INLET SECTION

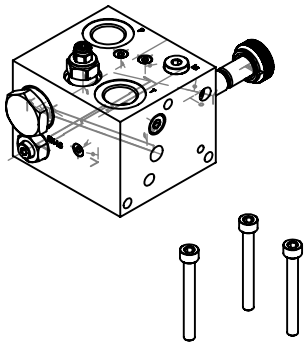

Inlet section	Screw lenght (mm)	Reference	Tightening Torque
SF000048	85	PE000491	6 - 7 N/m
SF000047	85	PE000491	6 - 7 N/m
SF000046	85	PE000491	6 - 7 N/m
SF000041	85	PE000491	6 - 7 N/m

FIXING STACKING MODULES

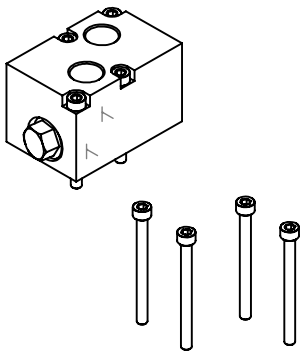

Flangiable valve	Screw lenght (mm)	Reference	Tightening Torque
MP	M5x16	AV000035	3 - 4 N/m
MA, MC and MB	M5x45	PE000148	3 - 4 N/m
KE and MF	M5x60	AV000016	3 - 4 N/m

EB - MODULAR VALVE SECTION

MADN-060-ZNFD

ANTI SHOCK/CAVITATION FLANGEABLE VALVE

ATLANTIC Fluid Tech

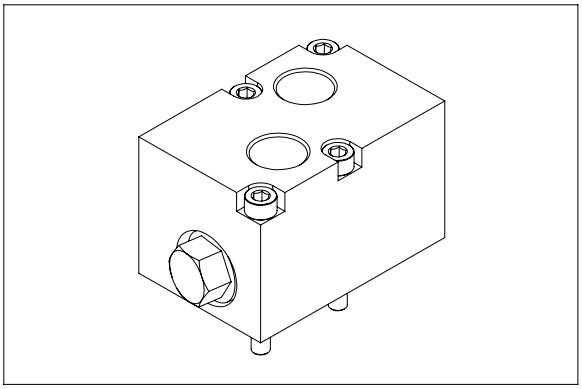

This flangeable valve can be mounted on top of the monoblock after removing the T line plugs; it has different configurations such as anti-shock, anti-cavitation or anti-shock/cavitation.
The are three mounting options, single valve on A or on B for single effect operation or valves on A and B for double effect operation. The manifold is made in aluminium with anodization surface treatment or on request in steel with zinc plating treatment.

TECHNICAL DATA

Max pressure	210/320 bar
Rated flow	60 l/min
Hydraulic fluid	Mineral oil DIN 51524
Fluid viscosity	10-500 mm²/s
Fluid temperature	-25°C/75°C
Enviroment temperature	-25°C/60°C
Weight	0,4 Kg

HYDRAULIC SCHEME

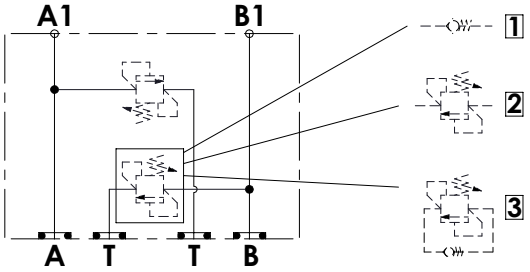

PRESSURE DROP

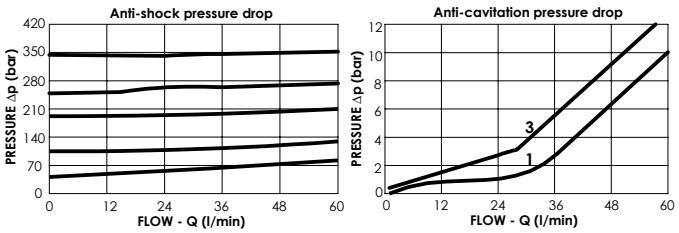

ORDERING DETAILS: SEPARATE ELEMENTS

MA-060-*NFD-**-***-N*****

*	VALVE TYPE
S	Single effect
D	Double effect

*	VALVE OPTION
N	Valves in both ports
A	Valve only A port
B	Valve only B port

*	MATERIAL TYPE
A	Steel zinc-plated (320 bar)
Z	Aluminium anodized (210 bar)

**	VALVE TYPE	
	A line	**B** line
	no valve	no valve
1	anti-cavitation	anti-cavitation
2	anti-shock	anti-shock
3	anti-cav/shock	anti-cav/shock

***	PORTS		
	A line	**B** line	**M**
G38	G 3/8"	G 3/8"	/
U09	9/16"-18 UNF	9/16"-18 UNF	/

*	SETTINGS RANGE
...	10 - 310 bar
../..	For differenceA e B setting sign it

QUICK CODE	
DESCRIPTION	CODE

OVERALL DIMENSIONS

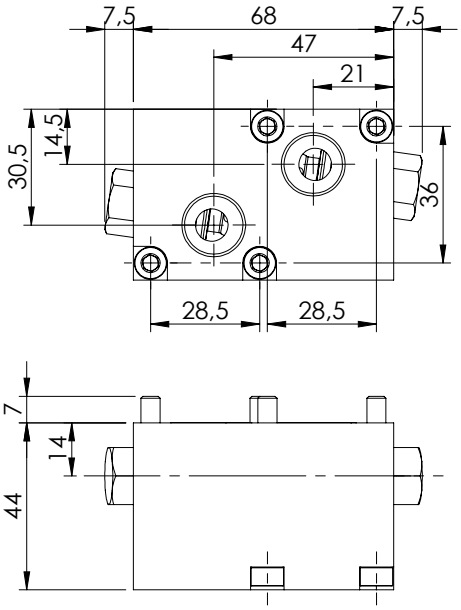

EB - MODULAR VALVE SECTION

MCDN-060-ZNFD

PO CHECK VALVE FLANGIABLE VALVE

ATLANTIC Fluid Tech

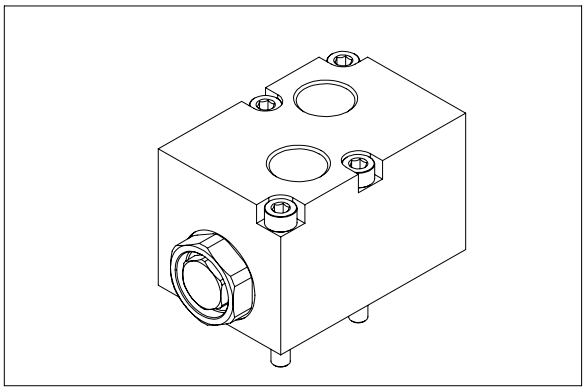

This flangeable valve can be mounted on top of the monoblock keeping the T line plugs.
The valve consist in two pilot operated check piloted by the opposite line and is poppet type.
The manifold is made in aluminium with anodization surface treatment or on request in steel with zinc plating treatment.

TECHNICAL DATA

Max pressure	210/320 bar
Rated flow	60 l/min
Pilot ratio	6:1
Hydraulic fluid	Mineral oil DIN 51524
Fluid viscosity	10-500 mm²/s
Fluid temperature	-25°C/75°C
Enviroment temperature	-25°C/60°C
Weight	0,4 Kg

HYDRAULIC SCHEME

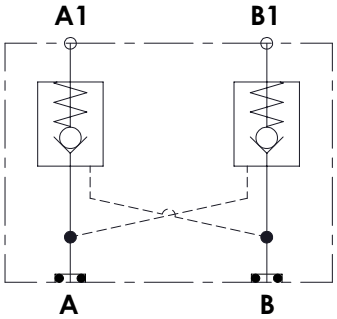

PRESSURE DROP

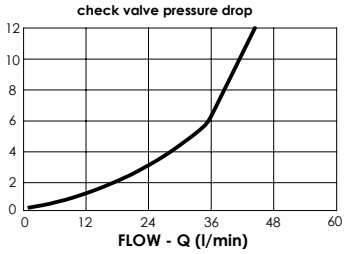

ORDERING DETAILS: SEPARATE ELEMENTS

MC[*][*]- 060-[*]NFD-06-[***]-N

*	VALVE TYPE
S	Single effect
D	Double effect

*	VALVE OPTION
N	Check valve on A e B ports
A	Check valve only A port
B	Check valve only B port

*	MATERIAL TYPE
A	Steel zinc-plated (320 bar)
Z	Aluminium anodized (210 bar)

***	PORTS		
	A line	**B** line	**M**
G38	G 3/8"	G 3/8"	/
U09	9/16"-18 UNF	9/16"-18 UNF	/

QUICK CODE	
DESCRIPTION	CODE
MCDN-060-ZNFD-06-G38-N210	MC000173
MCSA-060-ZNFD-06-G38-N210	MC000185

OVERALL DIMENSIONS

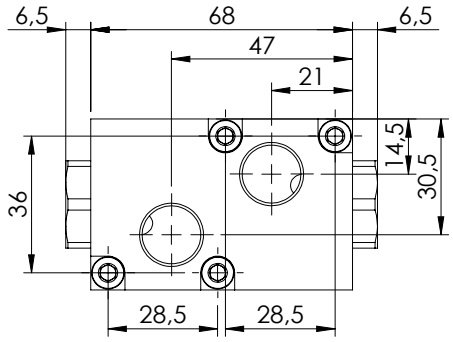

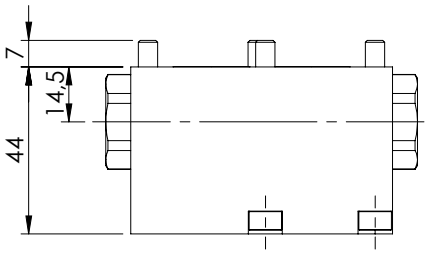

EB - MODULAR VALVE SECTION

MBDN-060-ZNFD

OVERCENTER FLANGEABLE VALVE

ATLANTIC Fluid Tech

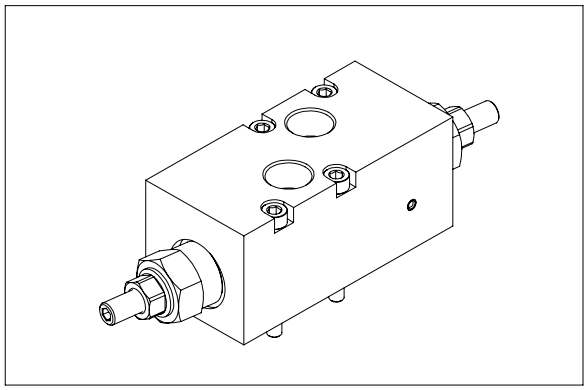

This modular block is made with overcenter valves to control the load on A and B port. The valves are poppet type with a pilot ratio of 4:1, other pilot ratios are available on request.
The standard configuration provides valves on both lines, it is possible to order also valves on only one side.
The manifold is made in aluminium with anodization surface treatment or on request in steel with zinc plating treatment.

TECHNICAL DATA

Max pressure	210/320 bar
Rated flow	60 l/min
Pilot ratio	4:1
Hydraulic fluid	Mineral oil DIN 51524
Fluid viscosity	10-500 mm²/s
Fluid temperature	-25°C/75°C
Enviroment temperature	-25°C/60°C
Weight	0,4 Kg

HYDRAULIC SCHEME

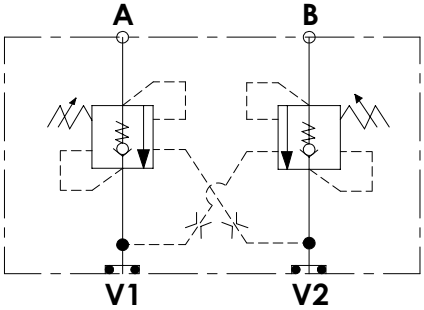

PRESSURE DROP

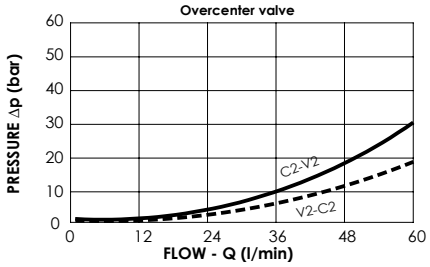

ORDERING DETAILS: SEPARATE ELEMENTS

MB[*][*]-060-[*]NFD-04-[***]-N[***]

*	VALVE TYPE
S	Single effect
D	Double effect

*	VALVE OPTION
N	Check valve on A e B ports
A	Check valve only A port
B	Check valve only B port

*	MATERIAL TYPE
A	Steel zinc-plated (320 bar)
Z	Aluminium anodized (210 bar)

***	PORTS		
	A line	**B** line	**M**
G38	G 3/8"	G 3/8"	/
U09	9/16"-18 UNF	9/16"-18 UNF	/

*	O-RING TYPE
100	100 bar settings
210	210 bar settings (standard)
320	320 bar settings (steel manifold)

QUICK CODE	
DESCRIPTION	CODE
MBDN-060-ZNFD-04-G38-N210	MB000874
MBSA-060-ZNFD-04-G38-N210	MB000875

OVERALL DIMENSIONS

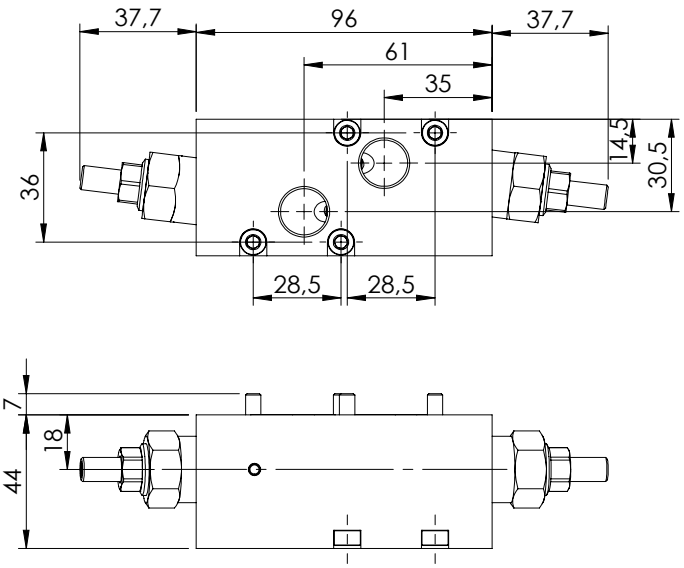

EB - MODULAR VALVE SECTION

KEDN-060-ZNFD

IN LINE ELETTRICAL FLANGEABLE VALVE

ATLANTIC Fluid Tech

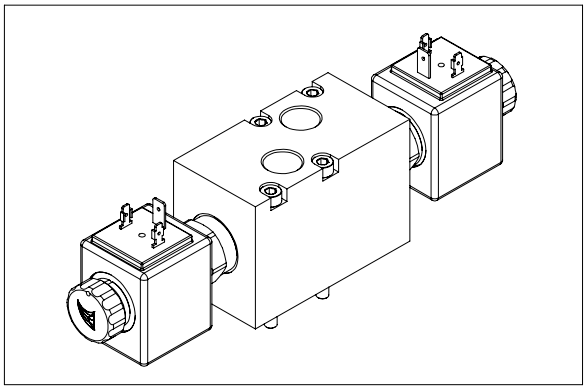

This modular block is equipped with solenoid valves, normally closed, poppet type and can be used to obtain a leek free function on the spool valve or to stop functions. It is available in three configurations, with valves on both lines or on A or on B line.
The manifold is made in aluminium with anodization surface treatment or on request in steel with zinc plating treatment.

TECHNICAL DATA

Max pressure	210/320 bar
Rated flow	60 l/min
Insertion	100% ED
Hydraulic fluid	Mineral oil DIN 51524
Fluid viscosity	10-500 mm²/s
Fluid temperature	-25°C/75°C
Enviroment temperature	-25°C/60°C
Weight	0,4 Kg

HYDRAULIC SCHEME

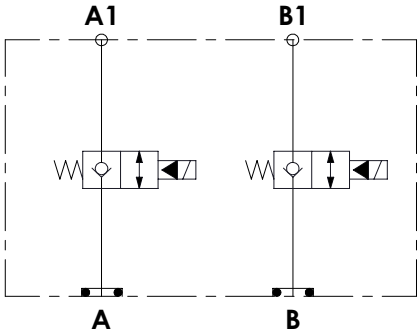

PRESSURE DROP

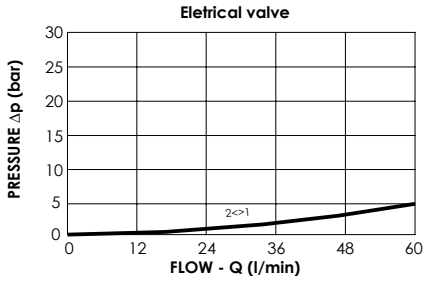

ORDERING DETAILS: SEPARATE ELEMENTS

KE[*][*]- 060-[*]NFD-04-[***]-[*][**]N

*	VALVE TYPE
S	Single effect
D	Double effect

*	VALVE OPTION
N	EV on A e B ports
A	EV only A port
B	EV only B port

*	MATERIAL TYPE
A	Steel zinc-plated (320 bar)
Z	Aluminium anodized (210 bar)

***	PORTS		
	A line	**B** line	**M**
G38	G 3/8"	G 3/8"	/
U09	9/16"-18 UNF	9/16"-18 UNF	/

*	VOLTAGE
	no coils
A	12 V dc
B	24 V dc

**	COILS TYPE
	no coils
HR	Hirschmann (ISO 4400 DIN 43650)
DT	Deutsch (DT04-2P)
AJ	Amp junior (AJ type)

QUICK CODE	
DESCRIPTION	CODE

OVERALL DIMENSONS

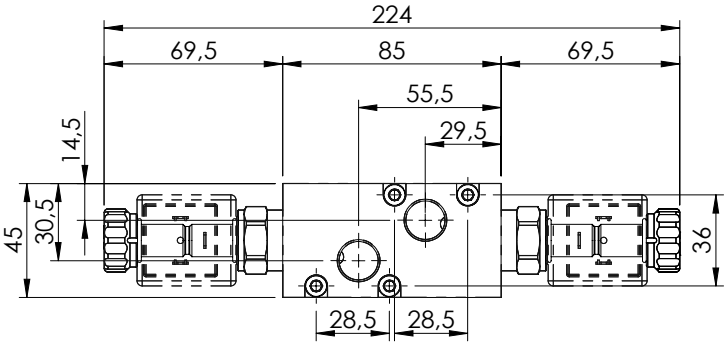

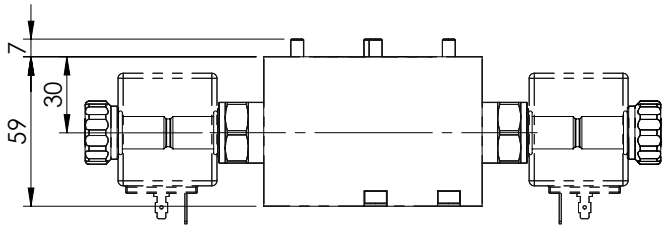

EB - MODULAR VALVE SECTION

KFDN-060-ZNFD

IN LINE FLOW RESTRICTOR FLANGIABLE VALVE

ATLANTIC Fluid Tech

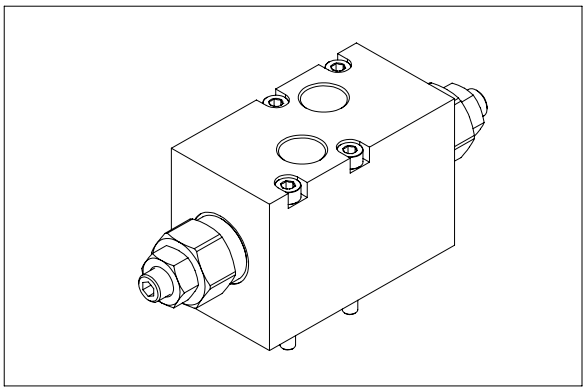

This modula valve is equipped with mono directional flow restrictor not compensated to adjust the speed of the application; it is available in three configurations, with valves on A line, on B line(single effect) or A and B line (double effect). The manifold is made in aluminium with anodization surface treatment or on request in steel with zinc plating treatment.

TECHNICAL DATA

Max pressure	210/320 bar
Rated flow	60 l/min
Hydraulic fluid	Mineral oil DIN 51524
Fluid viscosity	10-500 mm²/s
Fluid temperature	-25°C/75°C
Enviroment temperature	-25°C/60°C
Weight	0,8 Kg

HYDRAULIC SCHEME

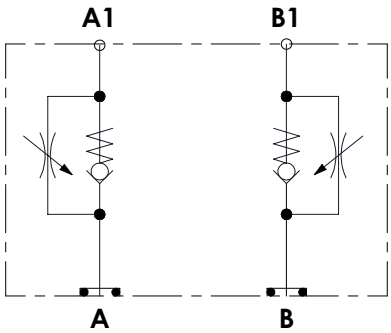

PRESSURE DROP

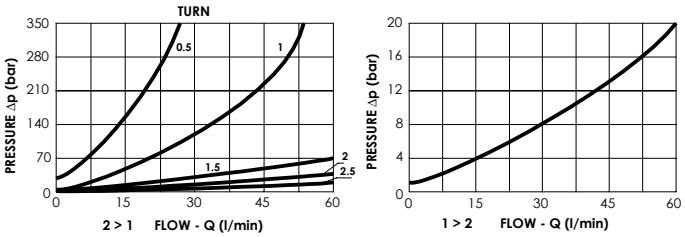

ORDERING DETAILS: SEPARATE ELEMENTS

KF[*][*]-060-[*]NFD-04-[***]-N

*	VALVE TYPE
S	Single effect
D	Double effect

*	VALVE OPTION
N	Flow restrictor on A e B ports
A	Flow restrictor only A port
B	Flow restrictor only B port

*	MATERIAL TYPE
A	Steel zinc-plated (320 bar)
Z	Aluminium anodized (210 bar)

***	PORTS		
	A line	**B** line	**M**
G38	G 3/8"	G 3/8"	/
U09	9/16"-18 UNF	9/16"-18 UNF	/

QUICK CODE	
DESCRIPTION	CODE

OVERALL DIMENSIONS

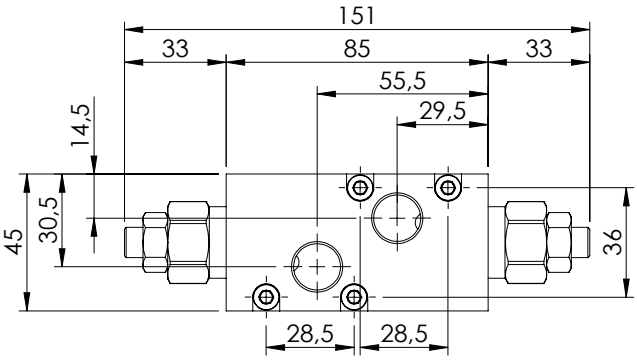

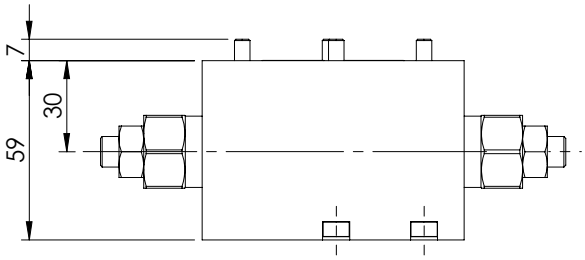

COIL SERIES M7

ATLANTIC Fluid Tech

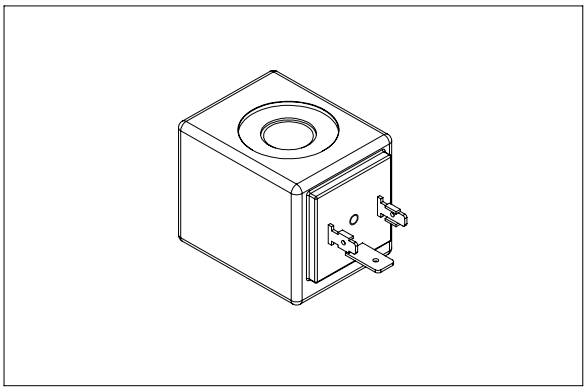

The coils have the magnetic circuit coated with black thermoplastic material. All metal parts are protected against oxidation according to RoHS directive.
For proper insulation it is required to install the proper seals supplied with the tubes.

TECHNICAL DATA

Protection type	IP 65 with all seal
Protection type	IP 69K with all seal only DT
Alimentation tolerance	+10%
Ambient temperature	-20°C +50°C
Duty cycle	100% ED (max 40°C ambient)
Isolation class	Class H (max 180°C)
Weight	0,18 kg

COIL TYPE

Coils are available with three different connections type, special voltage are available on request, please contact AFT sales network.
(1) Ambient temperature 25°C
(2) Ambient temperature 20°C

DIN 43650 (HR)

Coils		Max winding temperature (1)	Nominal potency	Resistence (±7%) (2)	Code parts
Code	**Voltage**				
A	12 V DC	135°C	20 W	7.2	AB000002
B	24 V DC	135°C	20 W	28.8	AB000003
C	48 V DC	135°C	20 W	115.2	AB000046
D	110 R AC	120°C	20 W	605	AB000012
E	220 R AC	120°C	20 W	2420	AB000007

DEUTSCH (DTV)

Coils		Max winding temperature (1)	Nominal potency	Resistence (±7%) (2)	Code parts
Code	**Voltage**				
A	12 V DC	135°C	20 W	7.2	AB000022
B	24 V DC	135°C	20 W	28.8	AB000023
C	48 V DC	135°C	20 W	115.2	
D	110 R AC	120°C	20 W	605	
E	220 R AC	120°C	20 W	2420	

AMP JUNIOR (AJ)

Coils		Max winding temperature	Nominal potency	Resistence (±7%)	Code parts
Code	**Voltage**				
A	12 V DC	135°C	20 W	7.2	AB000005
B	24 V DC	135°C	20 W	28.8	AB000014
C	48 V DC	135°C	20 W	115.2	AB000021
D	110 R AC	120°C	20 W	605	
E	220 R AC	120°C	20 W	2420	

OVERALL DIMENSIONS

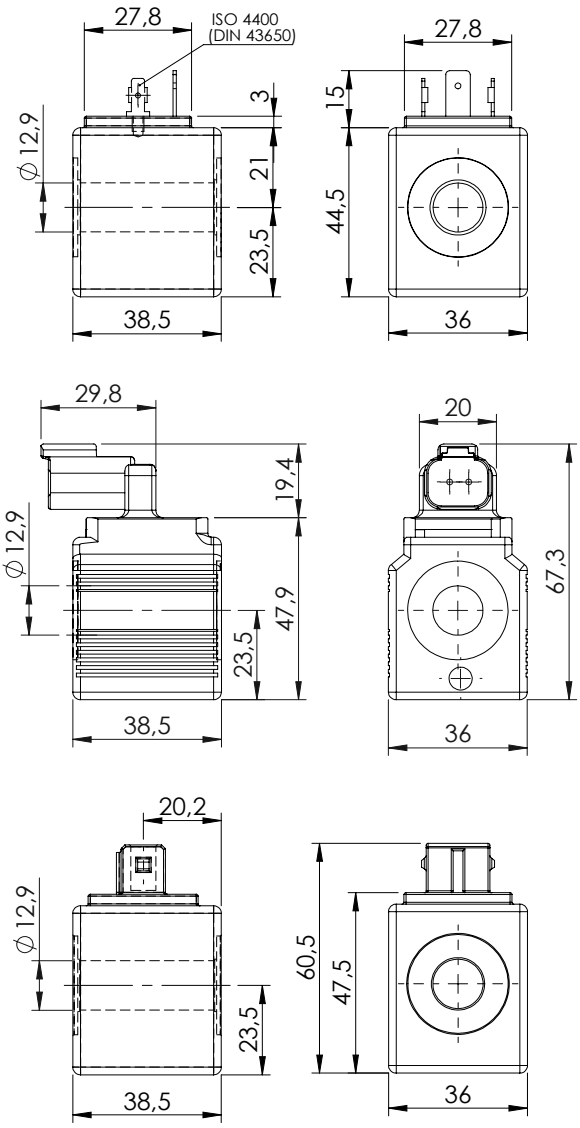

COIL SERIES M14

ATLANTIC Fluid Tech

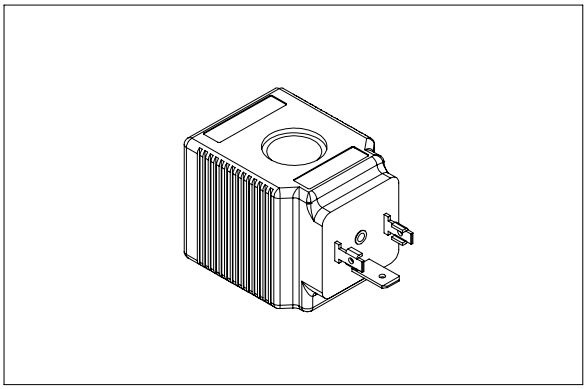

The coils have the magnetic circuit coated with black thermoplastic material. All metal parts are protected against oxidation according to RoHS directive.
For proper insulation it is required to install the proper seals supplied with the tubes.

TECHNICAL DATA

Protection type	IP 65 with all seal
Protection type	IP 69K with all seal only DT
Activation	18000/h
Alimentation tolerance	+10%
Ambient temperature	-20°C + 50°C
Duty cycle	100% ED (max 40°C ambient)
Isolation class	Class H (max 180°C)
Weight	0,18 kg

COILS TYPE

Coils are available with three different connections type, special voltage are available on request, please contact AFT sales network.
(1) Ambient temperature 25°C
(2) Ambient temperature 20°C

OVERALL DIMENSIONS

DIN 43650 (HR)

Coils		Max winding temperature (1)	Nominal potency	Resistence (±7%) (2)	Code parts
Code	**Voltage**				
A	12 V DC	135°C	26 W	5.54	AB000143
B	24 V DC	135°C	26 W	22.15	AB000144
C	48 V DC	135°C	26 W	88.6	
D	110 R AC	120°C	26 W	465.4	
E	220 R AC	120°C	26 W	1861.5	

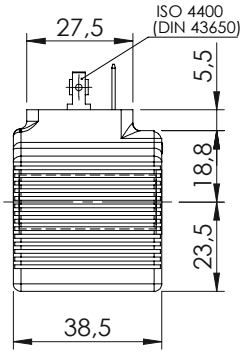

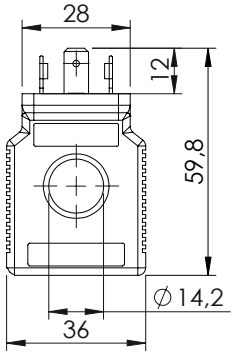

DEUTSCH (DTV)

Coils		Max winding temperature (1)	Nominal potency	Resistence (±7%) (2)	Code parts
Code	**Voltage**				
A	12 V DC	135°C	26 W	5.54	AB000132
B	24 V DC	135°C	26 W	22.15	AB000133
C	48 V DC	135°C	26 W	88.6	
D	110 R AC	120°C	26 W	465.4	
E	220 R AC	120°C	26 W	1861.5	

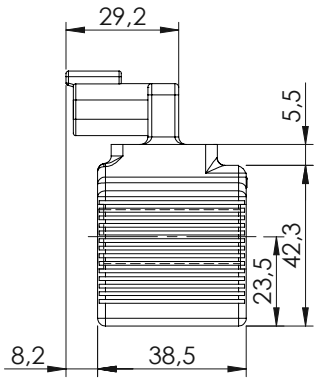

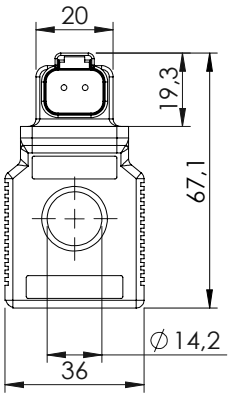

AMP JUNIOR (AJ)

Coils		Max winding temperature	Nominal potency	Resistence (±7%)	Code parts
Code	**Voltage**				
A	12 V DC	135°C	26 W	5.54	AB000136
B	24 V DC	135°C	26 W	22.15	
C	48 V DC	135°C	26 W	88.6	AB000131
D	110 R AC	120°C	26 W	465.4	
E	220 R AC	120°C	26 W	1861.5	

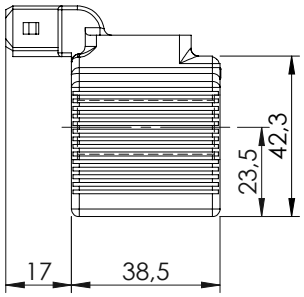

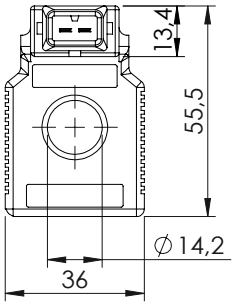

COIL SERIES M8

ATLANTIC Fluid Tech

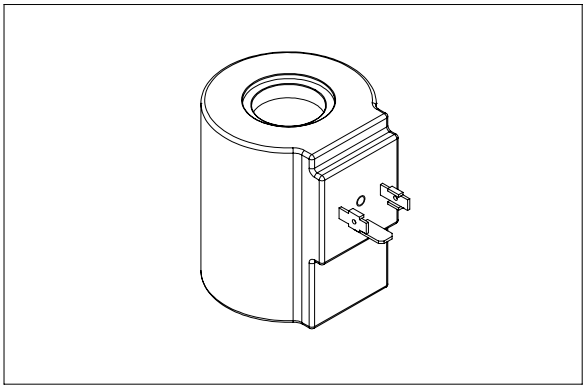

The coils have the magnetic circuit coated with black thermoplastic material. All metal parts are protected against oxidation according to RoHS directive.
For proper insulation it is required to install the proper seals supplied with the tubes.

TECHNICAL DATA

Protection type	IP 65 with all seal
Protection type	IP 69K with all seal only DT
Alimentation tolerance	+10%
Ambient temperature	-20°C + 50°C
Duty cycle	100% ED (max 40°C ambient)
Isolation class	Class H (max 180°C)
Weight	0,18 kg

COILS TYPE

Coils are available with three different connections type, special voltage are available on request, please contact AFT sales network.
(1) Ambient temperature 25°C
(2) Ambient temperature 20°C

OVERALL DIMENSIONS

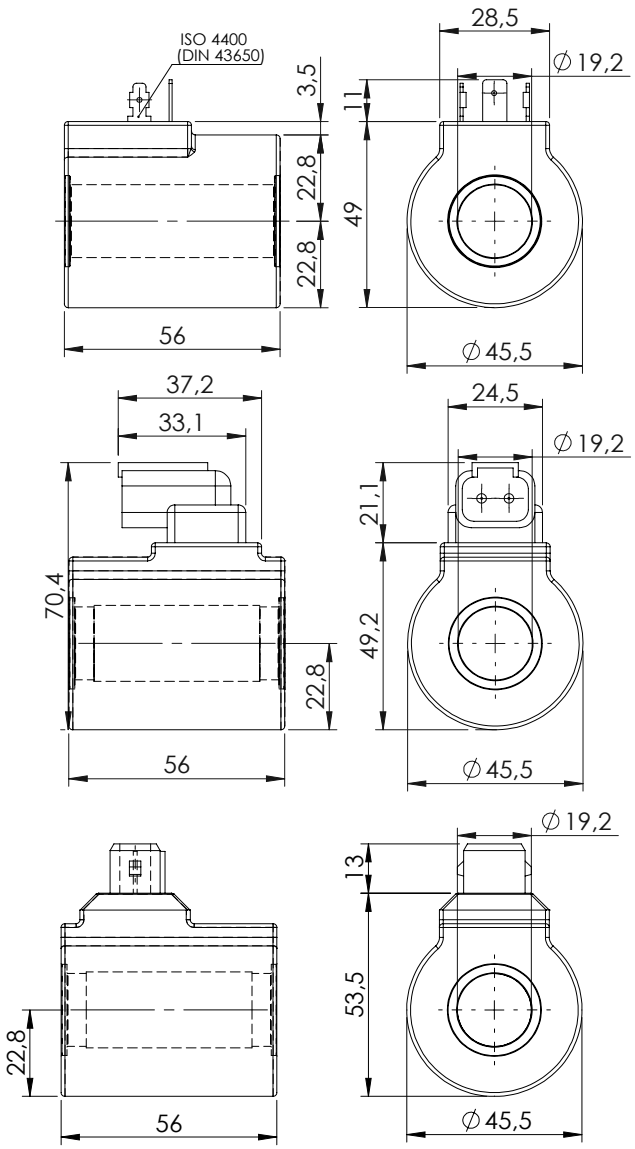

HIRSCHMANN (HR)

Coils		Max winding temperature (1)	Nominal potency	Resistence (±7%) (2)	Code parts
Code	**Voltage**				
A	12 V DC	135°C	33 W	4.36	AB000015
B	24 V DC	135°C	33 W	17.5	AB000029
C	48 V DC	135°C	33 W	69.8	AB000158
D	110 R AC	120°C	33 W	366.7	AB000092
E	220 R AC	120°C	33 W	1466.7	

DEUTSCH (DTV)

Coils		Max winding temperature (1)	Nominal potency	Resistence (±7%) (2)	Code parts
Code	**Voltage**				
A	12 V DC	135°C	33 W	4.36	AB000104
B	24 V DC	135°C	33 W	17.5	AB000105
C	48 V DC	135°C	33 W	69.8	
D	110 R AC	120°C	33 W	366.7	
E	220 R AC	120°C	33 W	1466.7	

AMP JUNIOR (AJ)

Coils		Max winding temperature	Nominal potency	Resistence (±7%)	Code parts
Code	**Voltage**				
A	12 V DC	135°C	33 W	4.36	AB000048
B	24 V DC	135°C	33 W	17.5	
C	48 V DC	135°C	33 W	69.8	
D	110 R AC	120°C	33 W	366.7	
E	220 R AC	120°C	33 W	1466.7	

COIL SERIES M15

ATLANTIC Fluid Tech

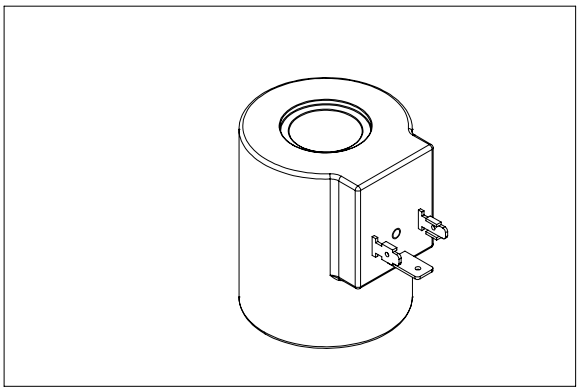

The coils have the magnetic circuit coated with black thermoplastic material. All metal parts are protected against oxidation according to RoHS directive.
For proper insulation it is required to install the proper seals supplied with the tubes.

TECHNICAL DATA

Protection type	IP 65 with all seal
Protection type	IP 69K with all seal only DT
Alimentation tolerance	+10%
Ambient temperature	-20°C + 50°C
Duty cycle	100% ED (max 40°C ambient)
Isolation class	Class H (max 180°C)
Weight	0,18 kg

COILS TYPE

Coils are available with three different connections type, special voltage are available on request, please contact AFT sales network.
(1) Ambient temperature 25°C
(2) Ambient temperature 20°C

OVERALL DIMENSIONS

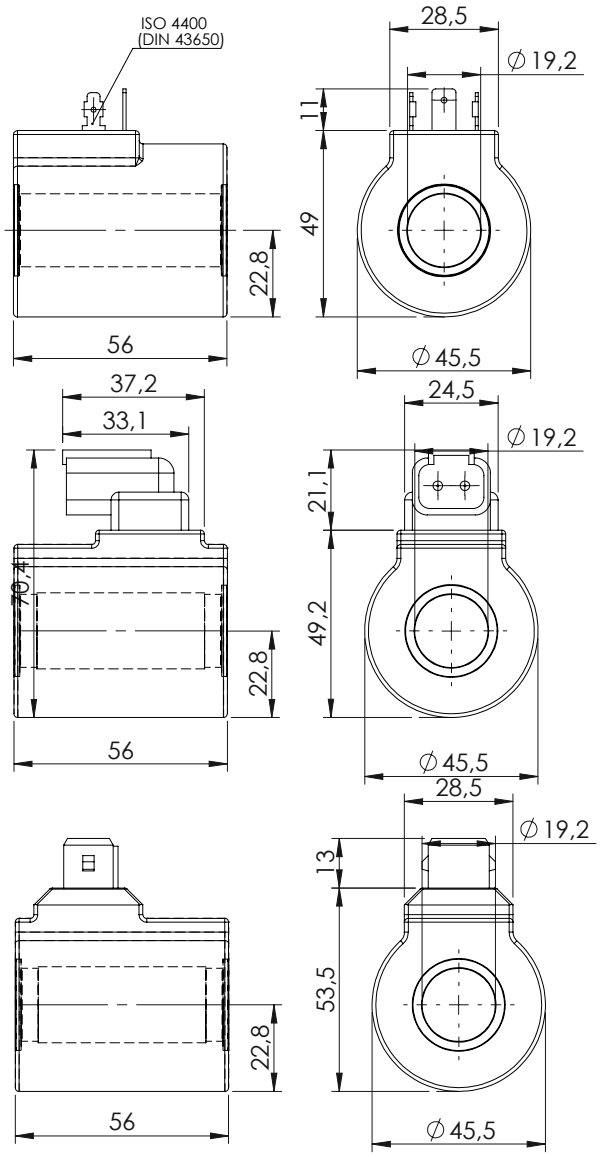

HIRSCHMANN (HR)

Coils		Max winding temperature (1)	Nominal potency	Resistence (±7%) (2)	Code parts
Code	**Voltage**				
A	12 V DC	135°C	23 W	6.3	AB000137
B	24 V DC	135°C	23 W	25	AB000138
C	48 V DC	135°C	23 W	100.2	
D	110 R AC	120°C	23 W	526	
E	220 R AC	120°C	23 W	2104.3	

DEUTSCH (DTV)

Coils		Max winding temperature (1)	Nominal potency	Resistence (±7%) (2)	Code parts
Code	**Voltage**				
A	12 V DC	135°C	23 W	6.3	AB000141
B	24 V DC	135°C	23 W	25	AB000142
C	48 V DC	135°C	23 W	100.2	
D	110 R AC	120°C	23 W	526	
E	220 R AC	120°C	23 W	2104.3	

AMP JUNIOR (AJ)

Coils		Max winding temperature	Nominal potency	Resistence (±7%)	Code parts
Code	**Voltage**				
A	12 V DC	135°C	23 W	6.3	AB000139
B	24 V DC	135°C	23 W	25	AB000140
C	48 V DC	135°C	23 W	100.2	
D	110 R AC	120°C	23 W	526	
E	220 R AC	120°C	23 W	2104.3	

CONNECTORS

CONNECTOR FOR SOLENOID VALVE

ATLANTIC Fluid Tech

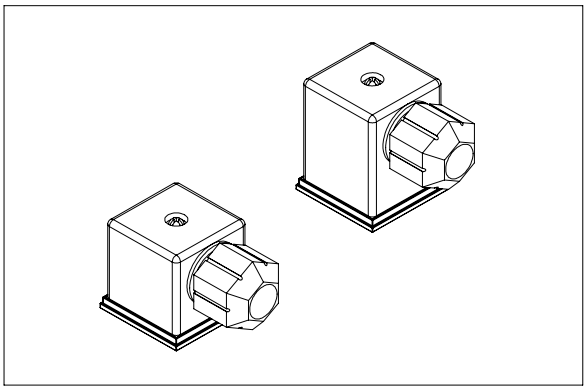

Connector for solenoid valve according to standards DIN 43650 / ISO 4400, different types of circuits are available, standard circuit, circuit with "VDR", circuit with "VDR+ rectifier" or circuit with LED

TECHNICAL DATA

Voltage rating	AC/DC: up to 250/300 V max
Max current	16.0 A
Contact resistence	≤ 4 mΩ
Max conductor	1.5 mm²
Cable range	Ø4.0 to Ø9.0 mm
Protection class	IP 67 EN60529
Seal	Nitrile rubber
Poles	2 plus ground
Connector	EN 175301-803 (DIN 43650)

ELECTRIC SCHEME

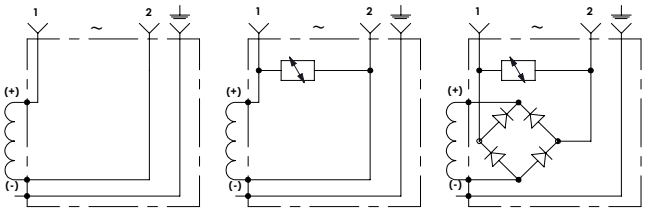

Standard circuit **Circuit with VDR** **Circuit with rectifier and VDR**

OVERALL DIMENSIONS

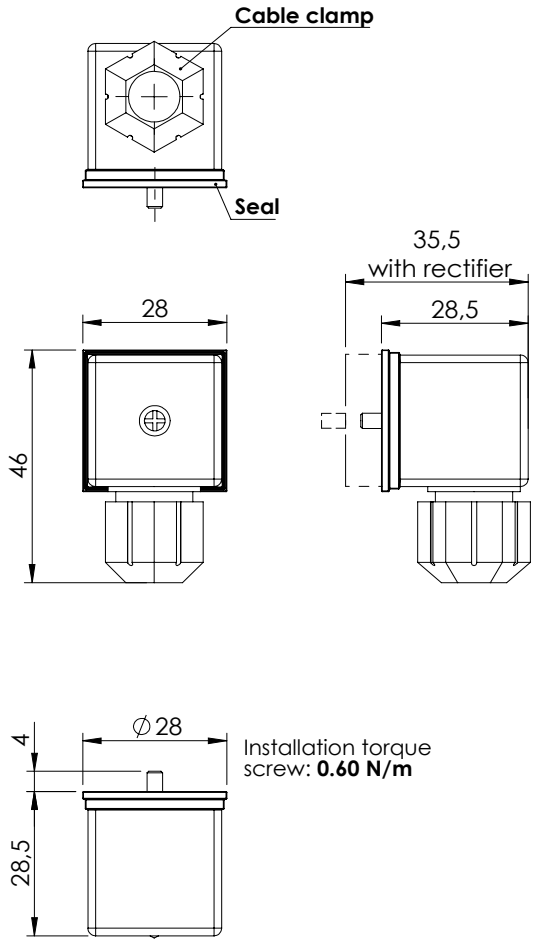

ORDERING DETAILS: SEPARATE ELEMENTS

Quick code	Colour	VDR	LED	Rectifier	Voltage
PV000171	Black	No	No	No	12V to 230V
PV000195	Black	Yes	No	No	12V dc
PV000349	Black	Yes	No	No	24V dc
PV000198	Trasparent	Yes	Yes	No	12V dc
PV000196	Trasparent	Yes	Yes	No	24V dc
PV000347	Black	Yes	No	Yes	12V RAC
PV000348	Black	Yes	No	Yes	24V RAC
	Black	Yes	No	Yes	110V RAC
	Black	Yes	No	Yes	220V RAC
	Trasparent	Yes	Yes	Yes	110V RAC
	Trasparent	Yes	Yes	Yes	220V RAC

NB: To have full performance and to guarantee the IP 65 level of protection, it is essential to assemble connectors with the supplied seals and with screw properly installed.

EB - ORDERING PART SECTION

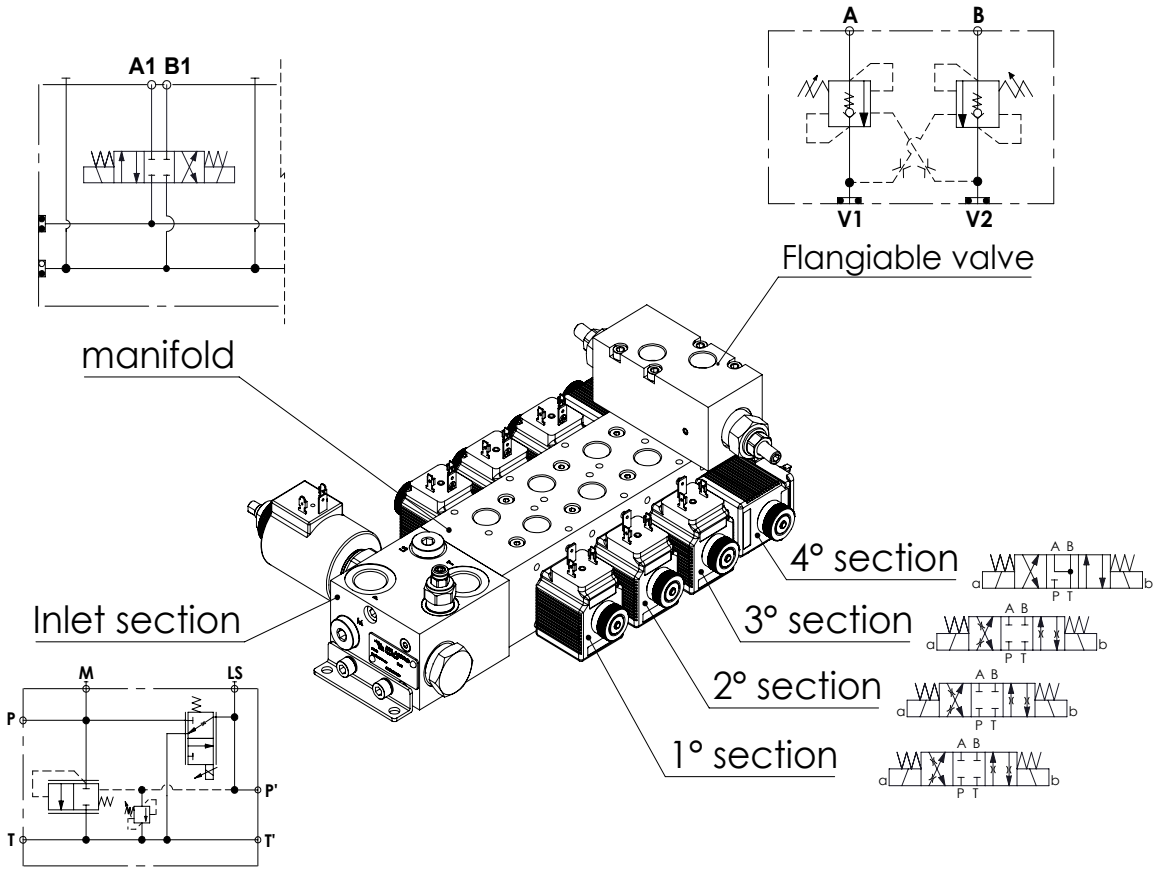

ORDER CODE

	QUICK CODE OR DESCRIPTION	COIL QUICK CODE OR DESCRIPTION
INLET SECTION		
MANIFOLD		
SPOOL SECTION 1		
FLANGEABLE VALVE SECTION 1		
SPOOL SECTION 2		
FLANGEABLE VALVE SECTION 2		
SPOOL SECTION 3		
FLANGEABLE VALVE SECTION 3		
SPOOL SECTION 4		
FLANGEABLE VALVE SECTION 4		
SPOOL SECTION 5		
FLANGEABLE VALVE SECTION 5		
SPOOL SECTION 6		
FLANGEABLE VALVE SECTION 6		
SPOOL SECTION 7		
FLANGEABLE VALVE SECTION 7		
SPOOL SECTION 8		
FLANGEABLE VALVE SECTION 8		
COILS		
OPTIONS		
OPTIONS		

ATLANTIC
Fluid Tech

SECTION 2

Pressure Reducing Valves

MANAGEMENT SYSTEM CERTIFICATION
DNV·GL
ISO 9001 = ISO 14001
OHSAS 18001

PRESSURE REDUCING VALVES

ATLANTIC Fluid Tech

Hydraulic scheme	Valve description	Valve type	Rated flow (l/min)	Max. pressure (bar)	Installation	Main port size or cavity type	Page
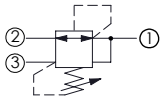	CPRL-007-DNNR	Direct acting, reducing and relieving	5	350	Cartridge	VP000016	2.01.**010**
	CPRL-030-DNNR	Direct acting, reducing and relieving	30	350	Cartridge	SAE-10-3N	2.01.**020**
	CPRL-030-DNSR	Direct acting, reducing and relieving	30	350	Cartridge	SAE-10-3N	2.01.**030**
	CPRL-030-DNSR-LN	Direct acting, reducing and relieving, panel installation	30	350	Cartridge	SAE-10-3N	2.01.**040**
	KPRL-030-DNSR	Direct acting, reducing and relieving, with check valve	30	210	In line	G3/8"	2.01.**050**
	KPRL-030-DNNR	Direct acting, reducing and relieving	30	250	In line	G3/8"	2.02.**080**
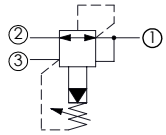	CPRL-060-PNNR	Pilot operated, reducing and relieving	60	350	Cartridge	SAE-10-3N	2.02.**060**
	CPRL-140-PNNR	Pilot operated, reducing and relieving	140	350	Cartridge	SAE-12-3N	2.02.**070**
	KPRL-060-DNNR	Pilot operated, reducing and relieving	60	250	In line	G3/8"	2.02.**080**
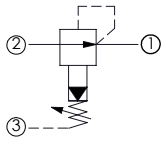	CPRR-060-PNNR	Pilot operated, reducing	60	350	Cartridge	SAE-10-3N	2.03.**090**
	CPRR-140-PNNR	Pilot operated, reducing	140	350	Cartridge	SAE-12-3N	2.03.**100**
	KPRR-140-PNNR	Pilot operated, reducing	140	350	In line	G1/2"	2.03.**110**

PRESSURE REDUCING AND RELIEVING

CPRL-007-DNNR

DIRECT ACTING SPOOL TYPE

ATLANTIC Fluid Tech

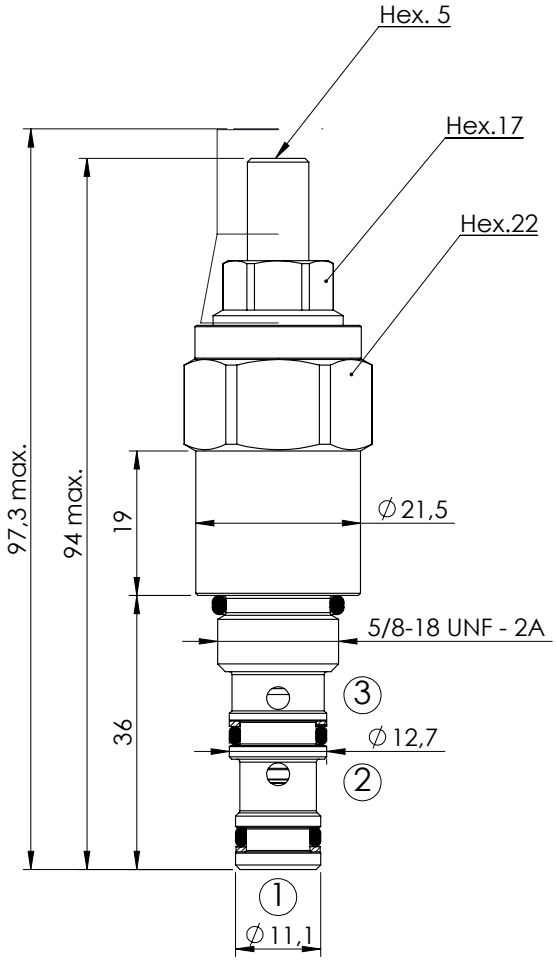

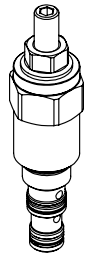

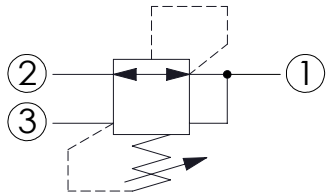

SPECIFICATIONS

Max. operating pressure:	350 bar
Rated flow:	5 l/min
Cavity:	VP000016
Weight:	0,14 kg
Installation torque:	25 - 30 Nm
Leakage:	35 cm^3 @ 50 bar
Seal kit:	RC700016

SEALING CAP

Ordering code:
AT000020

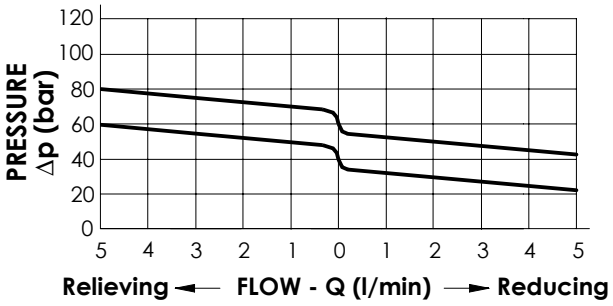

ORDERING CODES

Quick code	Description	Standard setting (bar)	Adjust. range (bar)	Pressure increase (bar/turn)	
CR000001	CPRL-007-DNNR-HN-016-N060	40	10-60	6	
CR000025	CPRL-007-DNNR-HN-016-N085	60	25-85	9	

PRESSURE REDUCING AND RELIEVING

CPRL-030-DNNR

DIRECT ACTING SPOOL TYPE

ATLANTIC Fluid Tech

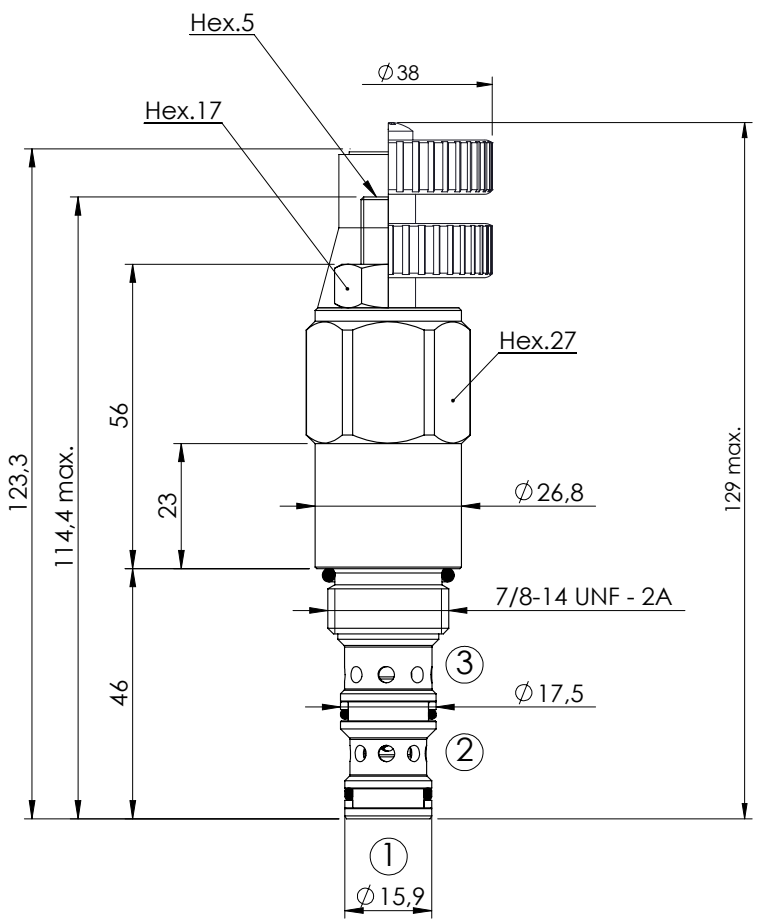

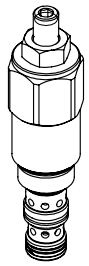

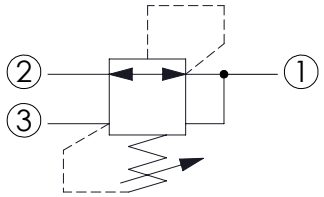

SPECIFICATIONS

Max. operating pressure:	350 bar
Rated flow:	30 l/min
Cavity:	SAE-10-3N
Weight:	0,28 kg
Installation torque:	55 - 62 Nm
Leakage:	50 cm^3@ 50 bar
Seal kit:	RA700092

SEALING CAP

Ordering code:

AT000022

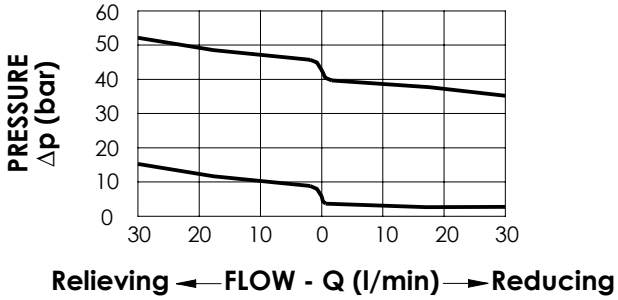

OPTIONS

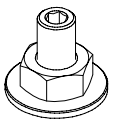

Adjustment with Screw

Adjustment with Handknob

ORDERING CODES

Quick code	Description	Standard setting (bar)	Adjust. range (bar)	Pressure increase (bar/turn)	Options
CR000002	CPRL-030-DNNR-HN-S10-N050	35	10-50	7	Adjustment with Screw
CR000008	CPRL-030-DNNR-VN-S10-N050	35	10-50	7	Adjustment with Handknob
CR000011	CPRL-030-DNNR-HN-S10-N015	5	1.5-15	1	Adjustment with Screw
CR000012	CPRL-030-DNNR-VN-S10-N015	5	1.5-15	1	Adjustment with Handknob

PRESSURE REDUCING AND RELIEVING

CPRL-030-DNSR

DIRECT ACTING SPOOL TYPE WITH DAMPING

ATLANTIC Fluid Tech

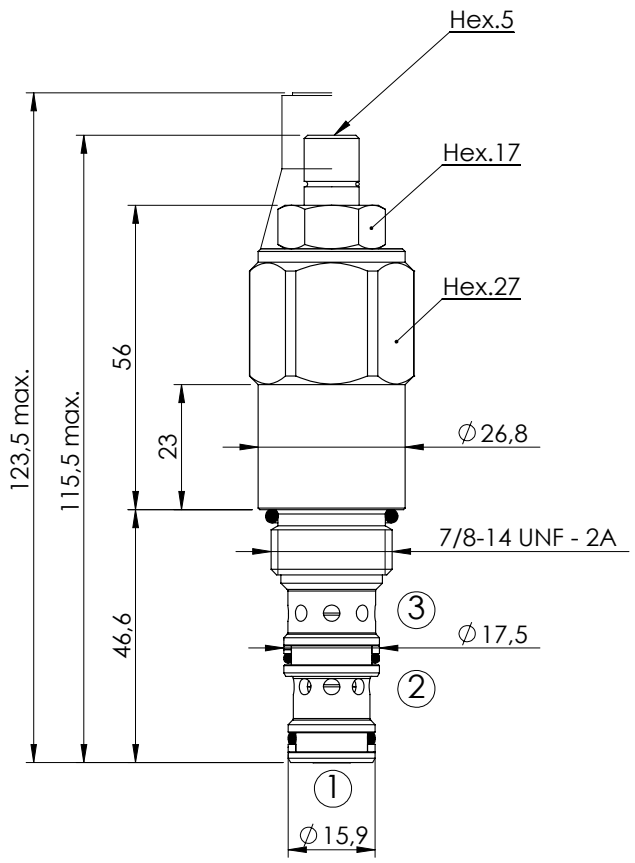

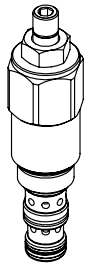

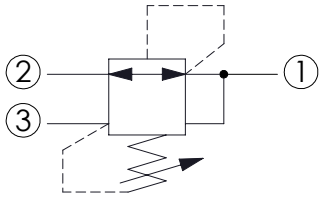

SPECIFICATIONS

Max. operating pressure:	350 bar
Rated flow:	30 l/min
Cavity:	SAE-10-3N
Weight:	0,29 kg
Installation torque:	55 - 62 Nm
Leakage:	50 cm^3 @ 50 bar
Seal kit:	RA700092

SEALING CAP

Ordering code:

AT000021

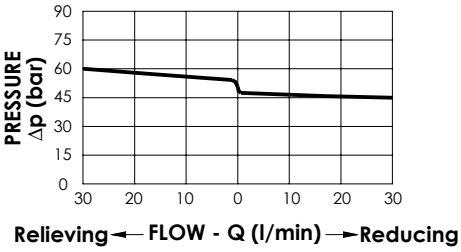

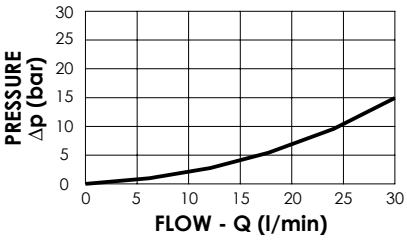

OPTIONS

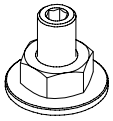

Adjustment with Screw

ORDERING CODES

Quick code	Description	Standard setting (bar)	Adjust. range (bar)	Pressure increase (bar/turn)	Options
CR000038	CPRL-030-DNSR-HN-S10-N080	50	20-75	11	Adjustment with Screw
CR000056	CPRL-030-DNSR-HN-S10-N040	20	10-35	5,3	Adjustment with Screw

PRESSURE REDUCING AND RELIEVING

CPRL-030-DNSR

DIRECT ACTING
SPOOL TYPE
PANEL INSTALLATION

ATLANTIC Fluid Tech

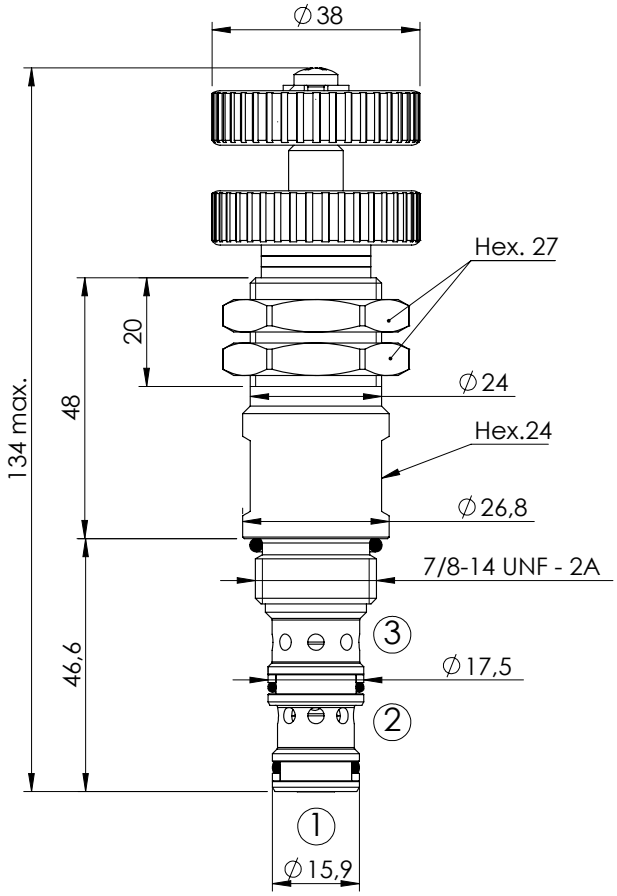

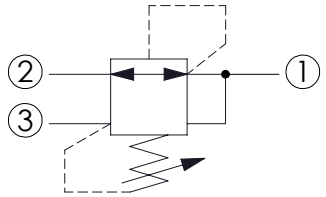

SPECIFICATIONS

Max. operating pressure:	350 bar
Rated flow:	30 l/min
Cavity:	SAE-10-3N
Weight:	0,31 kg
Installation torque:	55 - 62 Nm
Leakage:	50 cm^3@ 50 bar
Seal kit:	RA700092

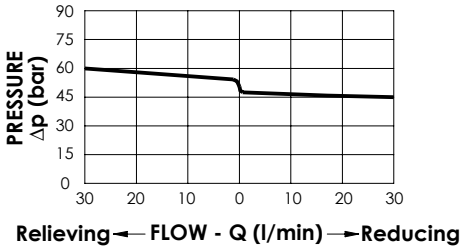

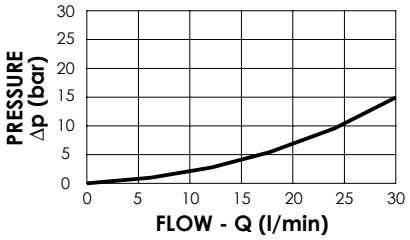

OPTIONS

Adjustment with Handknob

ORDERING CODES

Quick code	Description	Standard setting (bar)	Adjust. range (bar)	Pressure increase (bar/turn)	Options
CR000048	CPRL-030-DNSR-LN-S10-N045	20	10 - 45	5,3	Adjustment with Handknob

PRESSURE REDUCING AND RELIEVING IN BODY

KPRL-030-DNSR

DIRECT ACTING WITH CHECK VALVE

ATLANTIC Fluid Tech

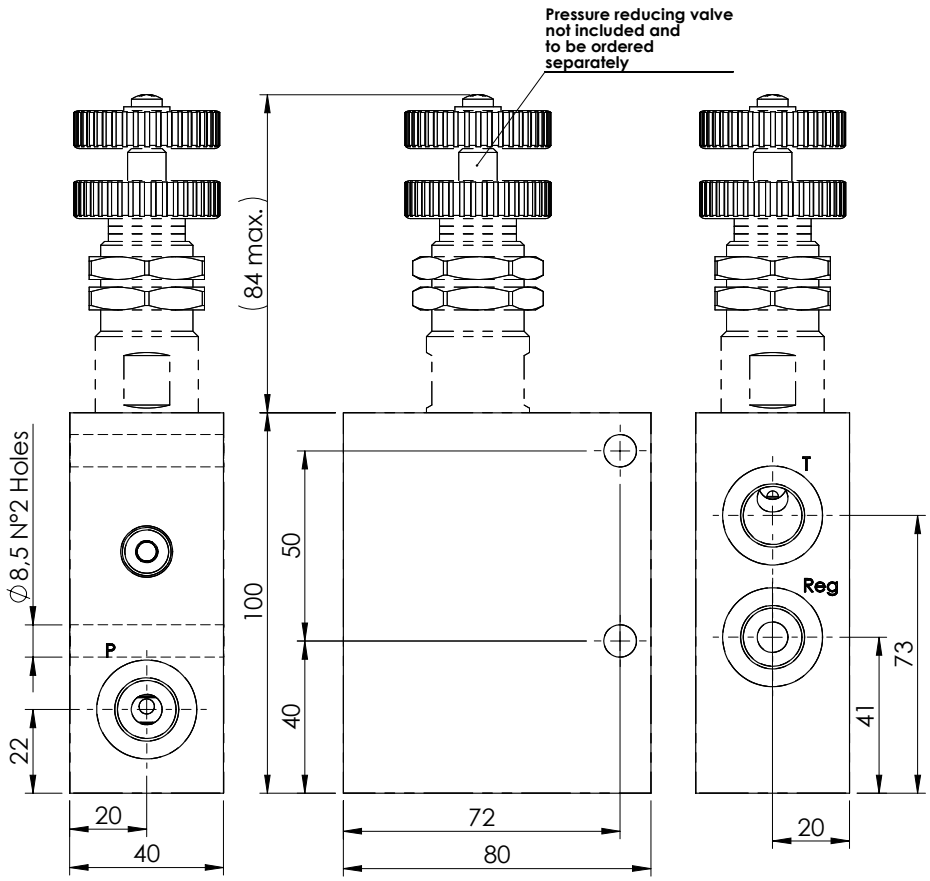

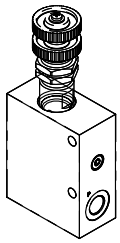

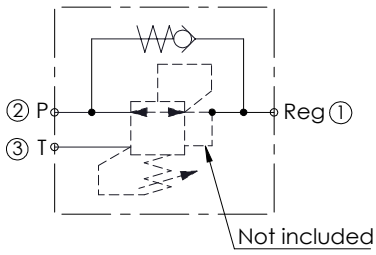

SPECIFICATIONS

Max. operating pressure:	**210 bar**
Rated flow:	**30 l/min**
Cavity type:	**SAE-10-3N**
Weight:	**0,87 Kg**
Manifold:	**Aluminium**

NOTES

-See pages 2.01.030 or 2.01.040 for pressure reducing valve info.

ORDERING CODES

Quick code	Description	Ports	
KR000043	**KPRL-030-DNSR-HN-G38-N210**	**G 3/8"**	

PRESSURE REDUCING AND RELIEVING

CPRL-060-PNNR

PILOT OPERATED SPOOL TYPE

ATLANTIC Fluid Tech

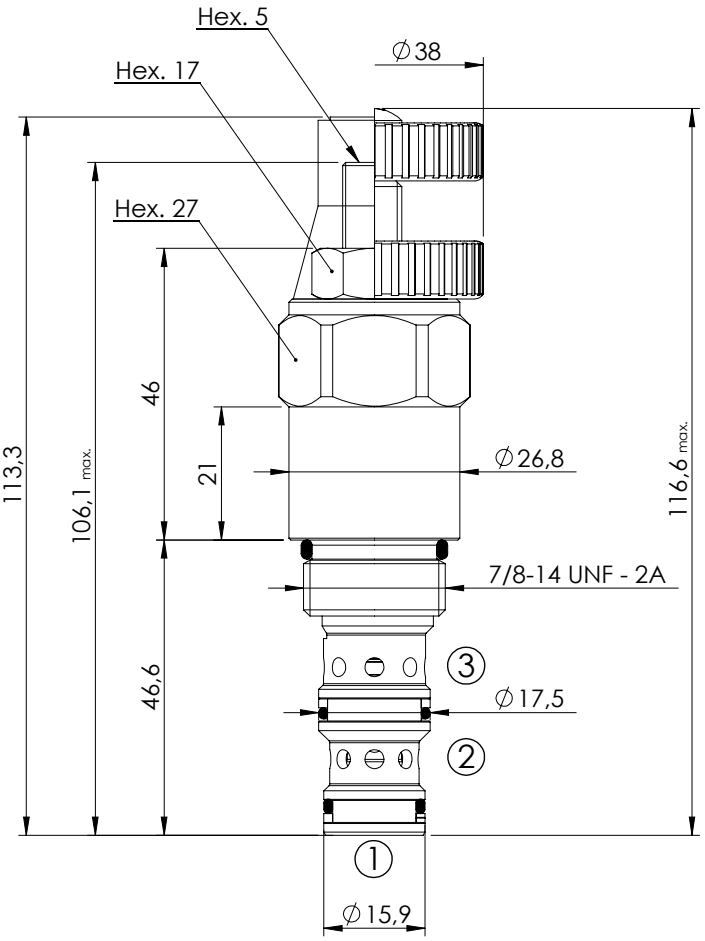

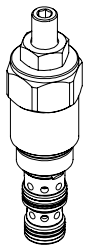

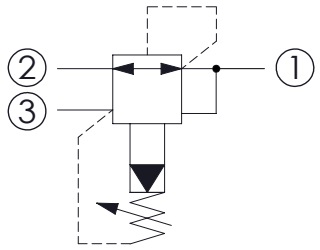

SPECIFICATIONS

Max. operating pressure:	350 bar
Rated flow:	60 l/min
Cavity:	SAE-10-3N
Weight:	0,26 kg
Installation torque:	55 - 62 Nm
Seal kit:	RA700092

SEALING CAP

Ordering code:
AT000022

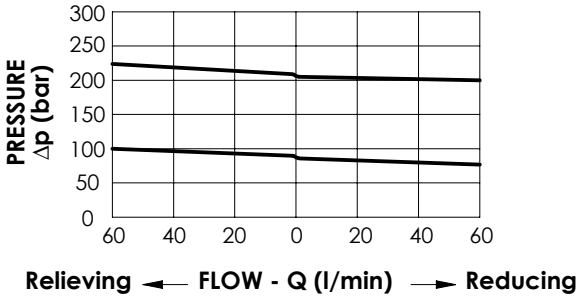

OPTIONS

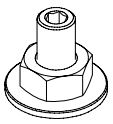

Adjustment with Screw

Adjustment with Handknob

ORDERING CODES

Quick code	Description	Standard setting (bar)	Adjust. range (bar)	Pressure increase (bar/turn)	Options
CR000006	CPRL-060-PNNR-HN-S10-N300	200	70-350	114	Adjustment with Screw
CR000007	CPRL-060-PNNR-VN-S10-N300	200	70-350	114	Adjustment with Handknob
CR000009	CPRL-060-PNNR-HN-S10-N100	80	20-110	37	Adjustment with Screw
CR000010	CPRL-060-PNNR-VN-S10-N100	80	20-110	37	Adjustment with Handknob

PRESSURE REDUCING AND RELIEVING

CPRL-140-PNNR

PILOT OPERATED SPOOL TYPE

ATLANTIC Fluid Tech

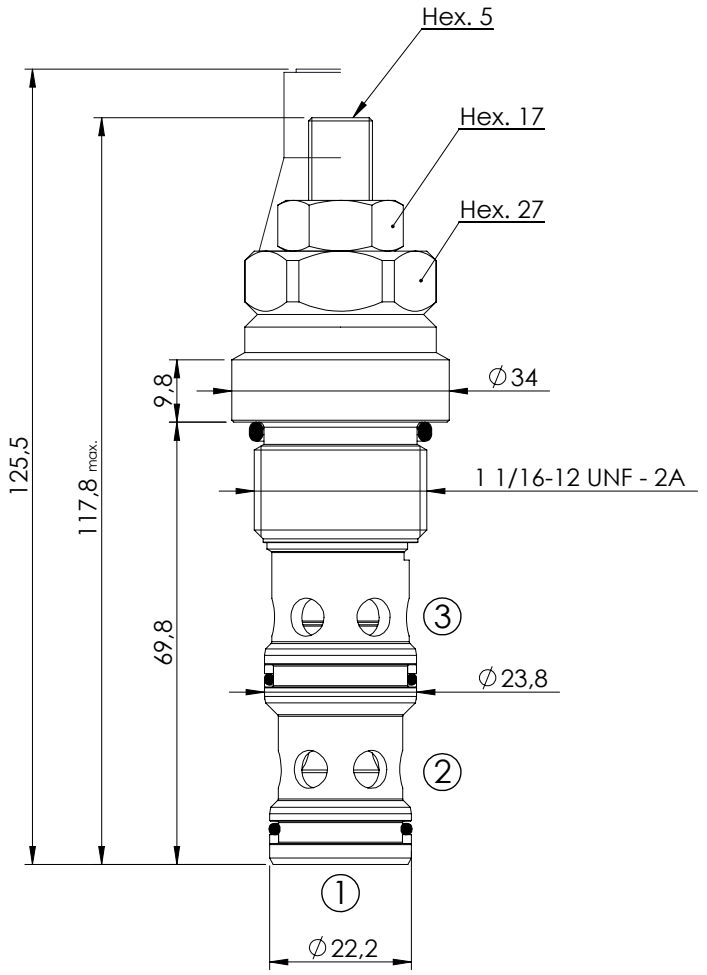

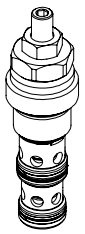

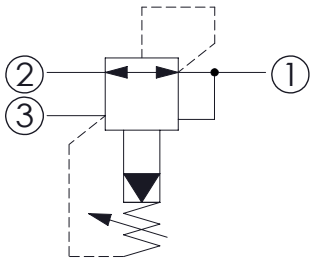

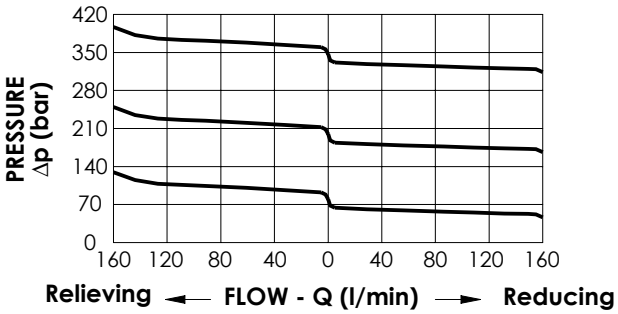

SPECIFICATIONS

Max. operating pressure:	350 bar
Rated flow:	140 l/min
Cavity:	SAE-12-3N
Weight:	0,34 kg
Installation torque:	80 - 95 Nm
Seal kit:	RA700093

SEALING CAP

Ordering code:
AT000022

OPTIONS

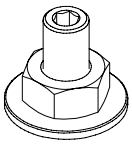

Adjustment with Screw

ORDERING CODES

Quick code	Description	Standard setting (bar)	Adjust. range (bar)	Pressure increase (bar/turn)	Options
CR000020	CPRL-140-PNNR-HN-S12-N350	300	140-350	114	Adjustment with Screw
CR000019	CPRL-140-PNNR-HN-S12-N200	200	70-250	69	Adjustment with Screw
CR000018	CPRL-140-PNNR-HN-S12-N100	100	10-140	37	Adjustment with Screw

PRESSURE REDUCING AND RELIEVING IN BODY

KPRL-030-DNNR

DIRECT/PILOT ACTING SPOOL TYPE

ATLANTIC Fluid Tech

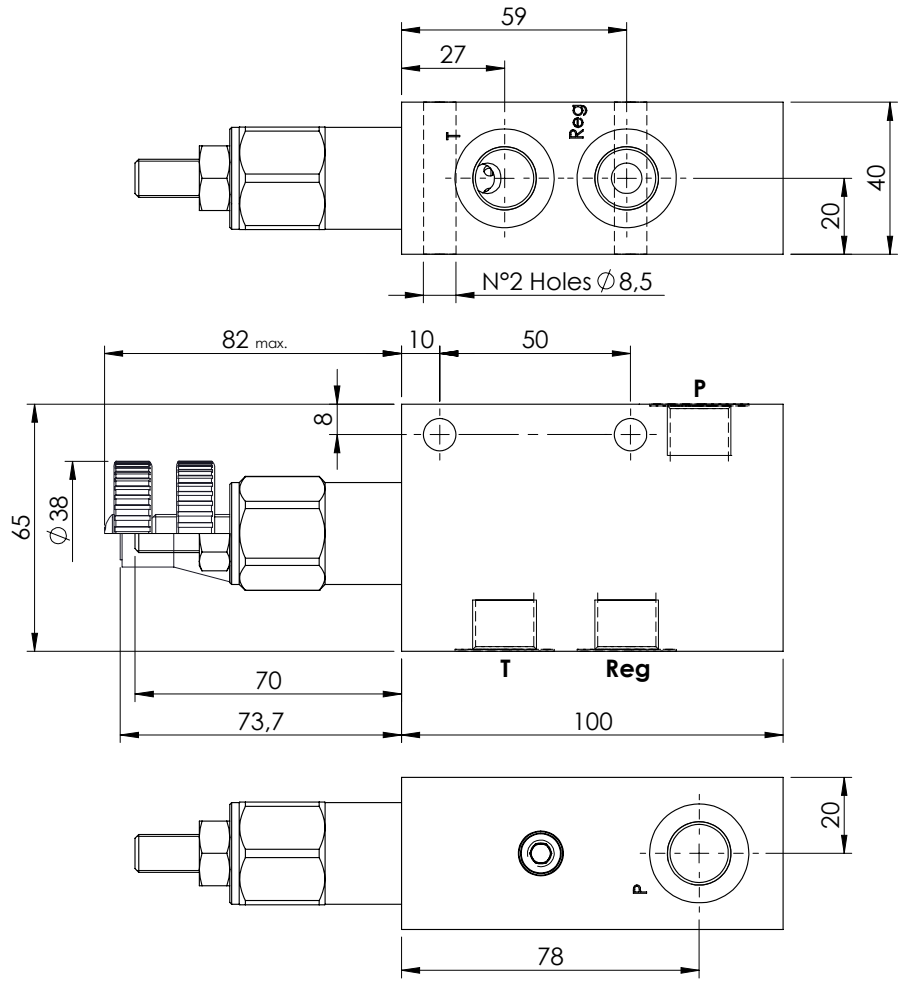

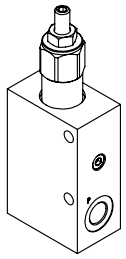

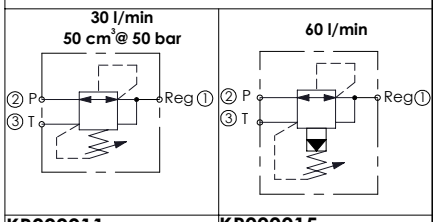

KR000011 KR000012 KR000013 KR000014	KR000015 KR000016

SPECIFICATIONS

Max. operating pressure:	250 bar
Rated flow:	30 l/min - 60 l/min
Cavity:	SAE-10-3N
Weight:	0,87 Kg
Leakage direct:	50cm³@ 50 bar
Manifold:	Aluminium

SEALING CAP

Ordering code:

AT000022

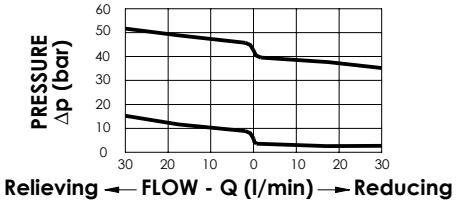

KR000011
KR000012
KR000013
KR000014

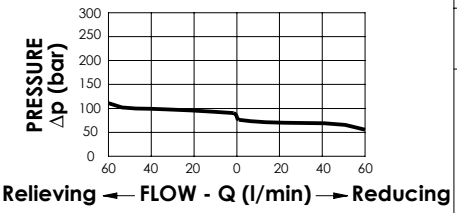

KR000015
KR000016

OPTIONS

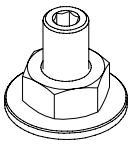

Adjustment with Screw

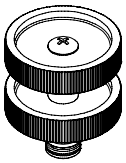

Adjustment with Handknob

ORDERING CODES

Quick code	Description	Ports	Standard setting (bar)	Adjust. range (bar)	Pressure increase (bar/turn)	Options
KR000011	KPRL-030-DNNR-HN-G38-N250	G 3/8"	5	1.5-15	1.6	Adjustment with Screw
KR000012	KPRL-030-DNNR-VN-G38-N250	G 3/8"	5	1.5-15	1.6	Adjustment with Handknob
KR000013	KPRL-030-DNNR-HN-G38-N250	G 3/8"	35	10-50	7	Adjustment with Screw
KR000014	KPRL-030-DNNR-VN-G38-N250	G 3/8"	35	10-50	7	Adjustment with Handknob
KR000015	KPRL-060-PNNR-HN-G38-N250	G 3/8"	80	20-110	37	Adjustment with Screw
KR000016	KPRL-060-PNNR-VN-G38-N250	G 3/8"	80	20-110	37	Adjustment with Handknob

PRESSURE REDUCING

CPRR-060-PNNR

PILOT OPERATED SPOOL TYPE

ATLANTIC Fluid Tech

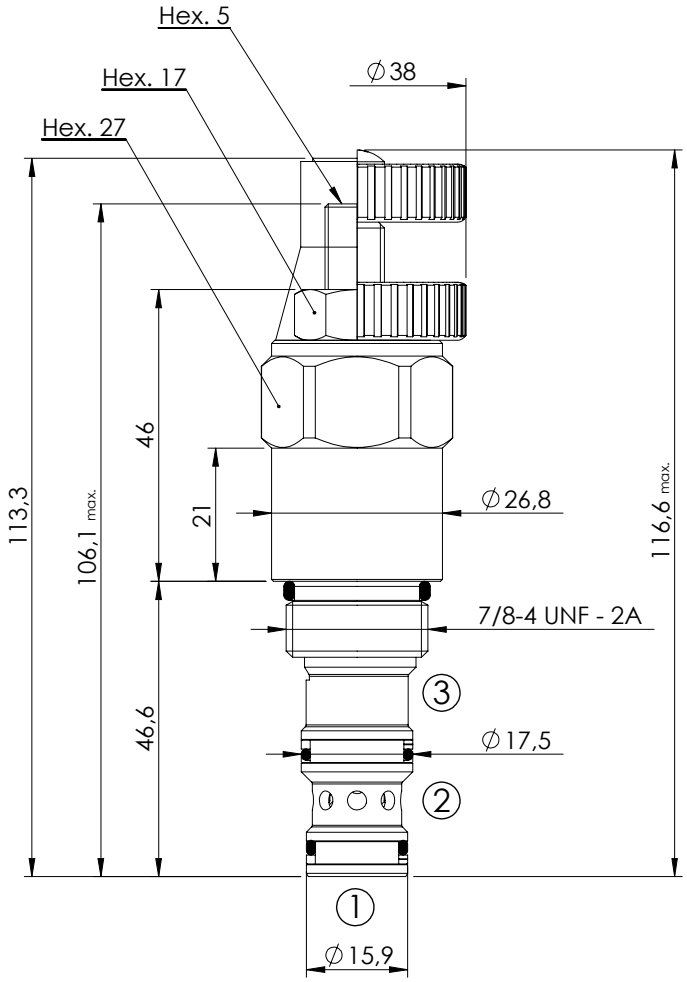

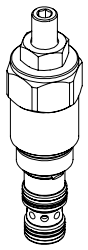

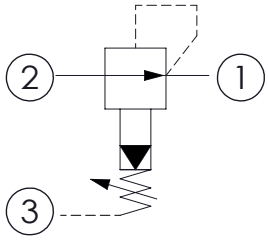

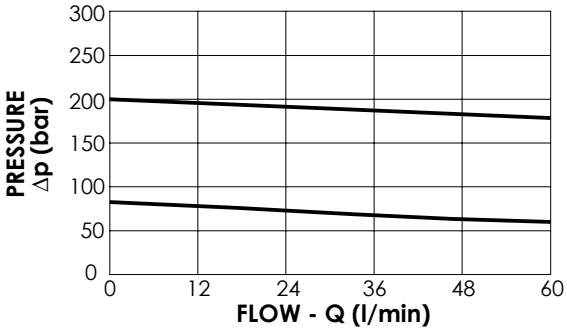

SPECIFICATIONS

Max. operating pressure:	350 bar
Rated flow:	60 l/min
Cavity:	SAE-10-3N
Weight:	0,26 kg
Installation torque:	55 - 62 Nm
Seal kit:	RA700092

SEALING CAP

Ordering code:

AT000022

OPTIONS

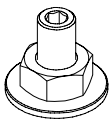

Adjustment with Screw

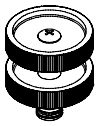

Adjustment with Handknob

ORDERING CODES

Quick code	Description	Standard setting (bar)	Adjust. range (bar)	Pressure increase (bar/turn)	Options
CR000022	CPRR-060-PNNR-HN-S10-N300	200	70-350	114	Adjustment with Screw
CR000023	CPRR-060-PNNR-VN-S10-N300	200	70-350	114	Adjustment with Handknob
CR000024	CPRR-060-PNNR-HN-S10-N100	80	20-110	37	Adjustment with Screw
CR000021	CPRR-060-PNNR-VN-S10-N100	80	20-110	37	Adjustment with Handknob

PRESSURE REDUCING

CPRR-140-PNNR

PILOT OPERATED SPOOL TYPE

ATLANTIC Fluid Tech

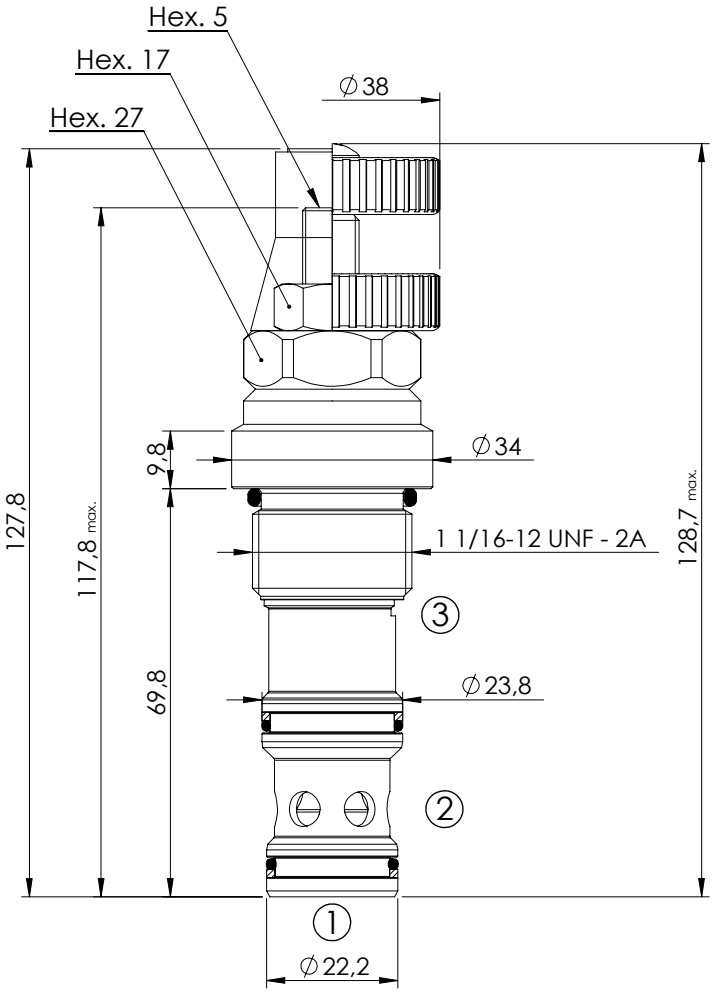

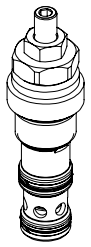

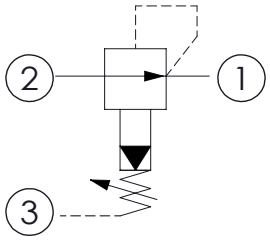

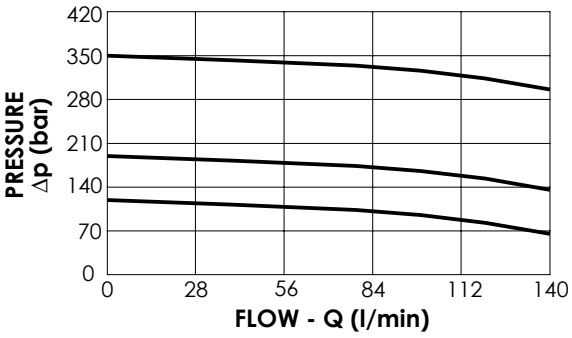

SPECIFICATIONS

Max. operating pressure:	350 bar
Rated flow:	140 l/min
Cavity:	SAE-12-3N
Weight:	0,35 kg
Installation torque:	80 - 95 Nm
Seal kit:	RA700093

SEALING CAP

Ordering code:
AT000022

OPTIONS

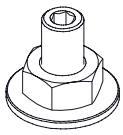

Adjustment with Screw

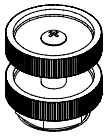

Handknob and locknut

ORDERING CODES

Quick code	Description	Standard setting (bar)	Adjust. range (bar)	Pressure increase (bar/turn)	Options
CR000017	CPRR-140-PNNR-HN-S12-N350	300	140-350	114	Adjustment with Screw
CR000030	CPRR-140-PNNR-VN-S12-N350	300	140-350	114	Adjustment with Handknob
CR000016	CPRR-140-PNNR-HN-S12-N200	200	70-210	69	Adjustment with Screw
CR000027	CPRR-140-PNNR-VN-S12-N200	200	70-210	69	Adjustment with Handknob
CR000015	CPRR-140-PNNR-HN-S12-N100	100	10-120	37	Adjustment with Screw
CR000031	CPRR-140-PNNR-VN-S12-N100	100	10-120	37	Adjustment with Handknob

PRESSURE REDUCING IN BODY

KPRR-140-PNNR

PILOT OPERATED SPOOL TYPE

ATLANTIC Fluid Tech

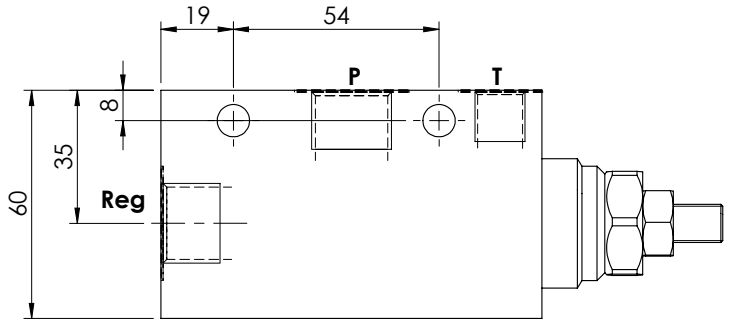

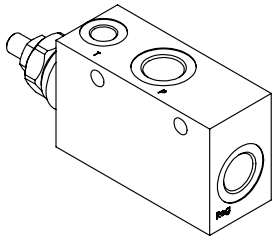

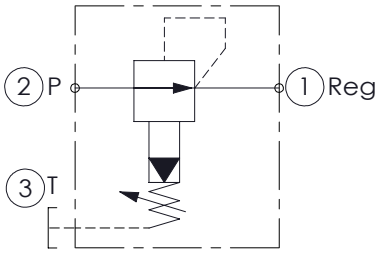

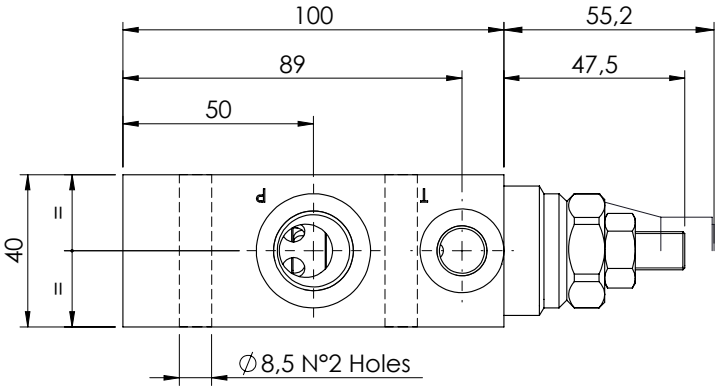

SPECIFICATIONS

Max. operating pressure:	250 bar
Rated flow:	140 l/min
Cavity:	SAE-12-3N
Weight:	0.8 kg
Manifold:	Aluminium

SEALING CAP

Ordering code:

AT000022

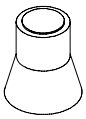

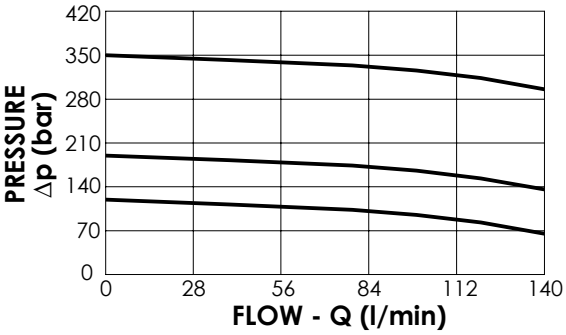

OPTIONS

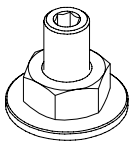

Adjustment with Screw

ORDERING CODES

Quick code	Description	Ports	Standard setting (bar)	Adjust. range (bar)	Pressure increase (bar/turn)	Options
KR000017	KPRR-140-PNNR-HN-G12-N350	P-Reg : **G 1/2"** T : **G 1/4"**	300	140-350	114	Adjustment with Screw
KR000019	KPRR-140-PNNR-HN-G12-N200	P-Reg : **G 1/2"** T : **G 1/4"**	200	70-210	69	Adjustment with Screw
KR000018	KPRR-140-PNNR-HN-G12-N100	P-Reg : **G 1/2"** T : **G 1/4"**	100	10-120	37	Adjustment with Screw

ATLANTIC
Fluid Tech

SECTION 20

Applications

MANAGEMENT SYSTEM CERTIFICATION
DNV·GL
ISO 9001 = ISO 14001
OHSAS 18001

APPLICATIONS

Chapter	Valve type	Page
20. 1	Excavators - Mini excavators	20.01.**000**
20. 2	All terrain cranes	20.02.**000**
20. 3	Concrete pump cranes	20.03.**000**
20. 4	Salt sprayers	20.04.**000**
20. 5	Garbage compactors	20.05.**000**
20. 6	Hook loaders	20.06.**000**

APPLICATIONS - EXCAVATORS

ATLANTIC Fluid Tech

Hydraulic scheme	Valve description	Valve type	Rated flow (l/min)	Max. pressure (bar)	Installation	Main port size or cavity type	Page
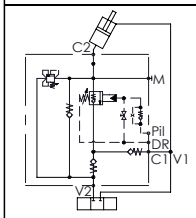	MLST-160-RLGR	Right version with oil recovery	160	420	In line	G 3/4"	20.01.**010**
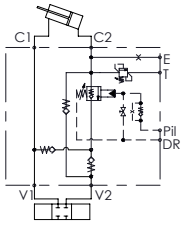	MLST-250-RAUR	Right version	250	420	Flanged	3/4" SAE 6000	20.01.**020**
	MLST-250-RAUL	Left version	250	420	Flanged	3/4" SAE 6000	20.01.**030**
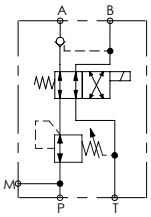	BDEF-010-ALRV	Quick hitch	10	380	In line	1/4" Jis	20.01.**040**
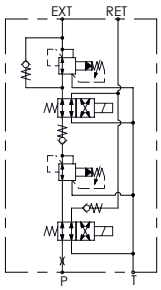	BNND-010-AERV	Quick hitch	10	350	In line	G 1/4"	20.01.**050**
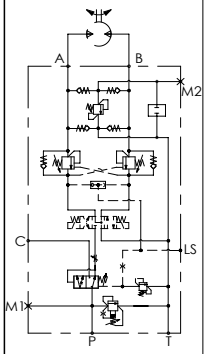	BNND-100-ALBE	Excavator attachment function	100	350	Flanged	G 1/2"	20.01.**060**
	BNND-200-ALBE	Excavator attachment function	200	350	Flanged	3/4" SAE 6000	20.01.**070**
	BNND-300-ALBE	Excavator attachment function	300	350	Flanged	1" SAE 6000	20.01.**080**
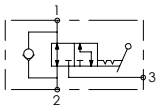	MDRC-200-SLVN	Selector valve	200	500	Flanged	3/4" SAE 6000	20.01.**090**
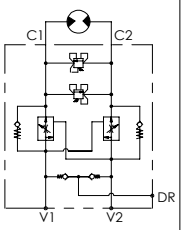	BPFD-060-ALSU	Flow regulated with relif valve	60	350	In line	G 1/2"	20.01.**100**

APPLICATIONS - EXCAVATORS

ATLANTIC Fluid Tech

Hydraulic scheme	Valve description	Valve type	Rated flow (l/min)	Max. pressure (bar)	Installation	Main port size or cavity type	Page
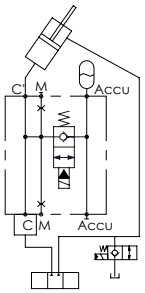	BNND-070-AERC	Solenoid activated	70	420	Flanged	3/4" SAE 3000/6000	20.01.**110**
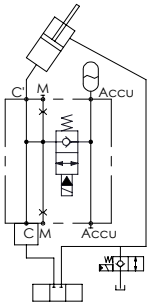	BNND-070-AERC	Solenoid activated	70	420	Flanged	1" SAE 3000/6000	20.01.**120**

EXCAVATORS VALVE

MLST-160-RLGR

WITH OIL RECOVERY

ATLANTIC Fluid Tech

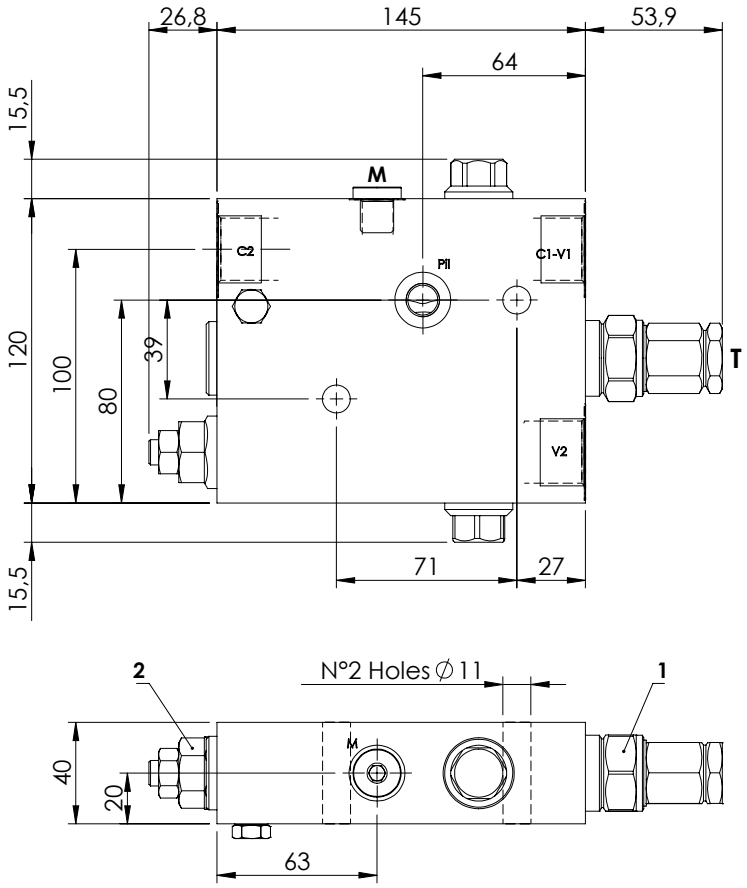

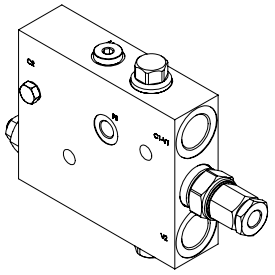

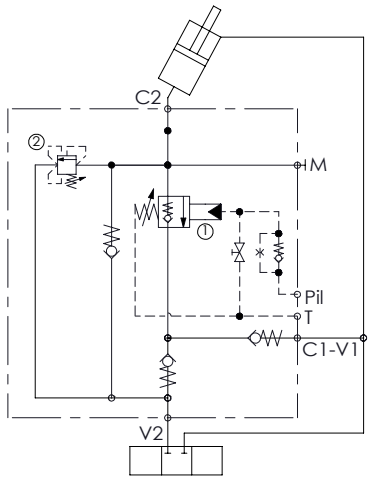

SPECIFICATIONS

Max. operating pressure:	420 bar
Rated flow:	160 l/min
Manifold:	Steel
Weight:	5,01 kg

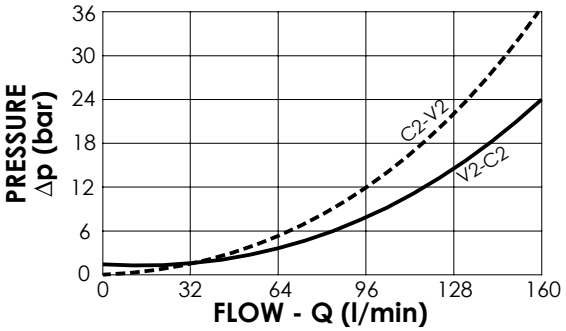

NOTES

When correctly adjusted for the specific excavator installation, these valves meet the requirement of ISO 8643

ORDERING CODES

Quick code	Description	Main ports size	Standard setting (bar)	Adjust. range (bar)	Pressure increase (bar/turn)
ML000165	MLST-160-RLGR-00-G34-N420	V2,C2: **G 3/4"** Pil,T,M: **G 1/4"**	① 350 Q=5 l/min ② 7.5 Crack. pr.	①350-400 ②3-15	① 72 ② 8

EXCAVATORS VALVE

MLST-250-RAUR

FLANGED TYPE
3/4" SAE 6000
WITH OIL RECOVERY

ATLANTIC Fluid Tech

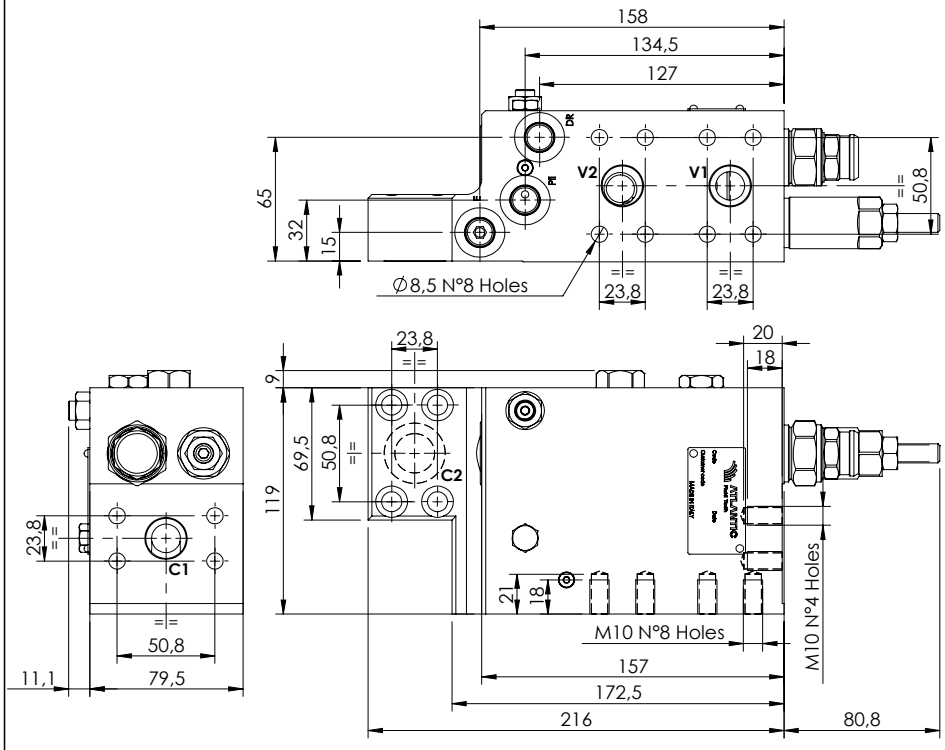

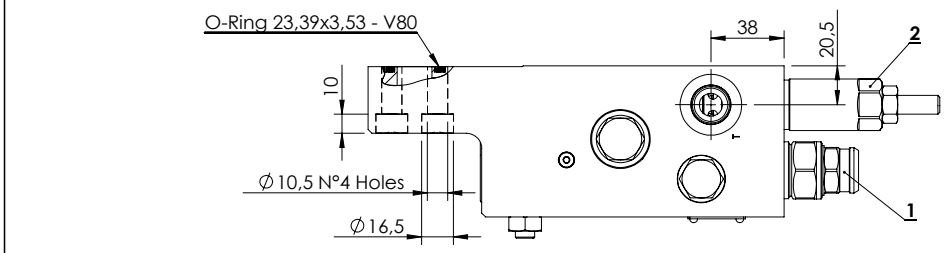

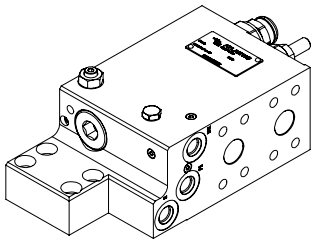

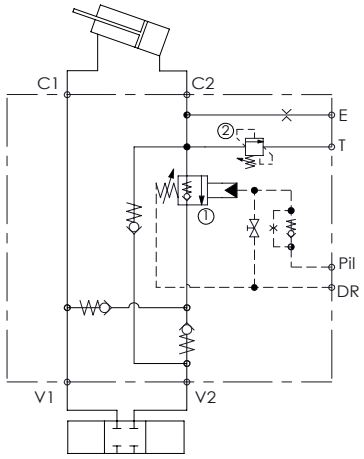

SPECIFICATIONS

Max. operating pressure:	**420 bar**
Rated flow:	**250 l/min**
Manifold:	**Steel**
Weight:	**11,7 kg**

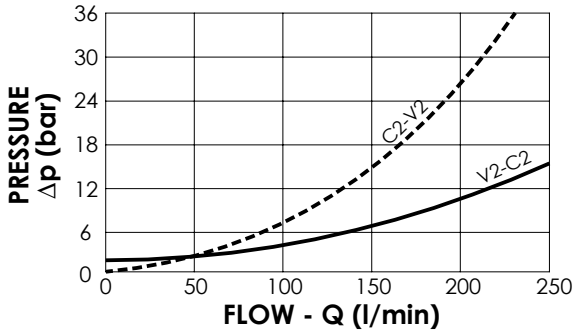

NOTES

When correctly adjusted for the special excavator installation, these valves meet the requirement of ISO 8643

ORDERING CODES

Quick code	Description	Main ports size	Standard setting (bar)	Adjust. range (bar)	Pressure increase (bar/turn)
ML000265	**MLST-250-RAUR-00-S34-N420**	V1,V2,C1,C2: **3/4" SAE 6000** E,Pil,Dr: **9/16-18 UNF** T: **3/4-16 UNF**	① **7.9 Crack. pr.** ② **395 Q=5 l/min**	① **3-15** ② **150-420**	① **6** ② **53**

EXCAVATORS VALVE

MLST-250-RAUL

FLANGED TYPE
3/4" SAE 6000
WITH OIL RECOVERY

ATLANTIC Fluid Tech

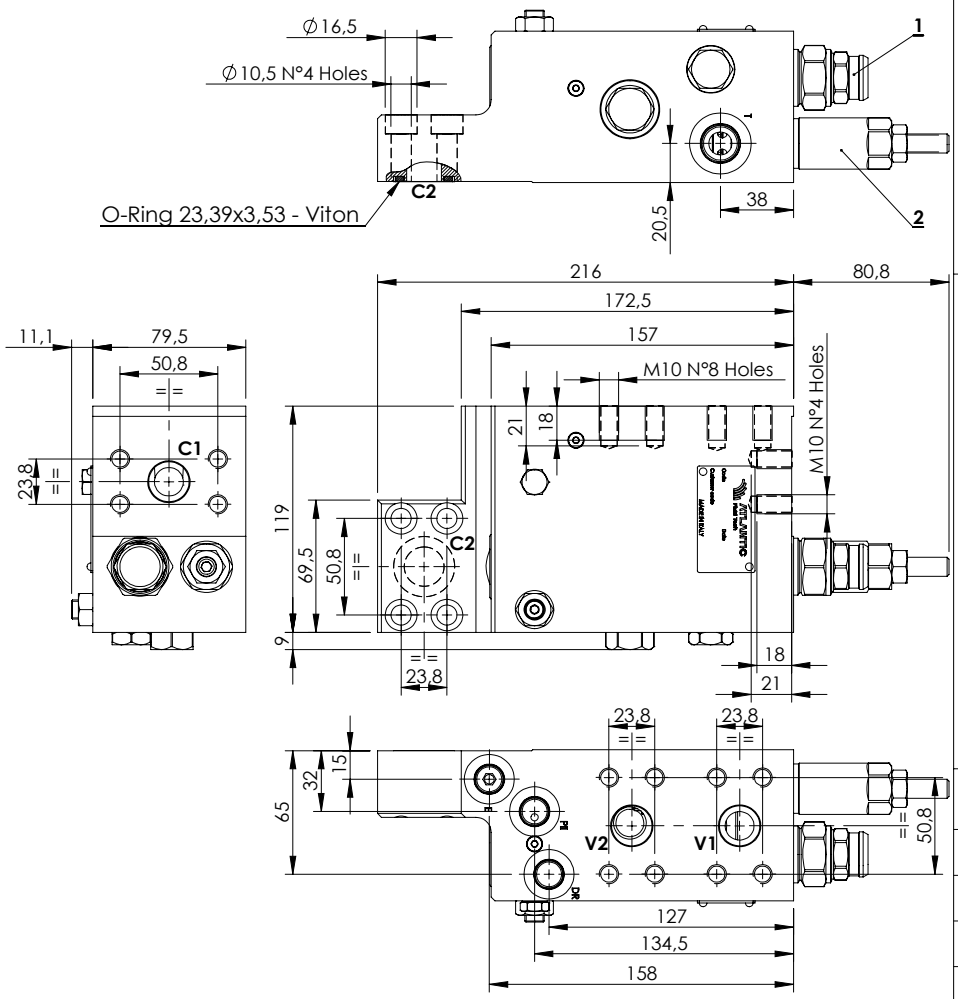

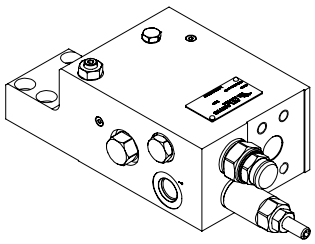

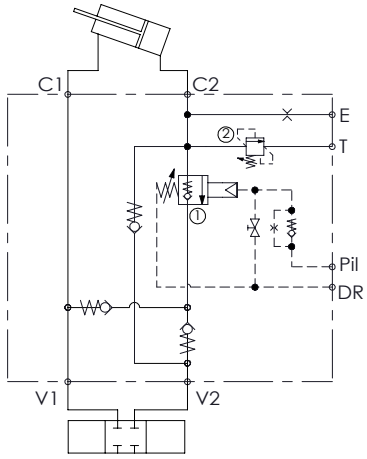

SPECIFICATIONS

Max. operating pressure:	**420 bar**
Rated flow:	**250 l/min**
Manifold:	**Steel**
Weight:	**11,72 kg**

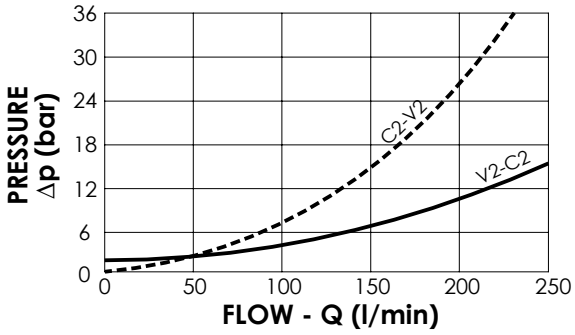

NOTES

When correctly adjusted for the special excavator installation, these valves meet the requirement of ISO 8643

ORDERING CODES

Quick code	Description	Main ports size	Standard setting (bar)	Adjust. range (bar)	Pressure increase (bar/turn)
ML000266	**MLST-250-RAUL-00-S34-N420**	V1,V2,C1,C2: **3/4" SAE 6000** E,Pil,Dr: **9/16-18 UNF** T: **3/4-16 UNF**	① **7.9 Crack. pr.** ② **395 Q=5 l/min**	① **3-15** ② **150-420**	① **6** ② **53**

EXCAVATORS VALVE

BDEF-010-ALRV

AUXILIARY QUICK HITCH

ATLANTIC Fluid Tech

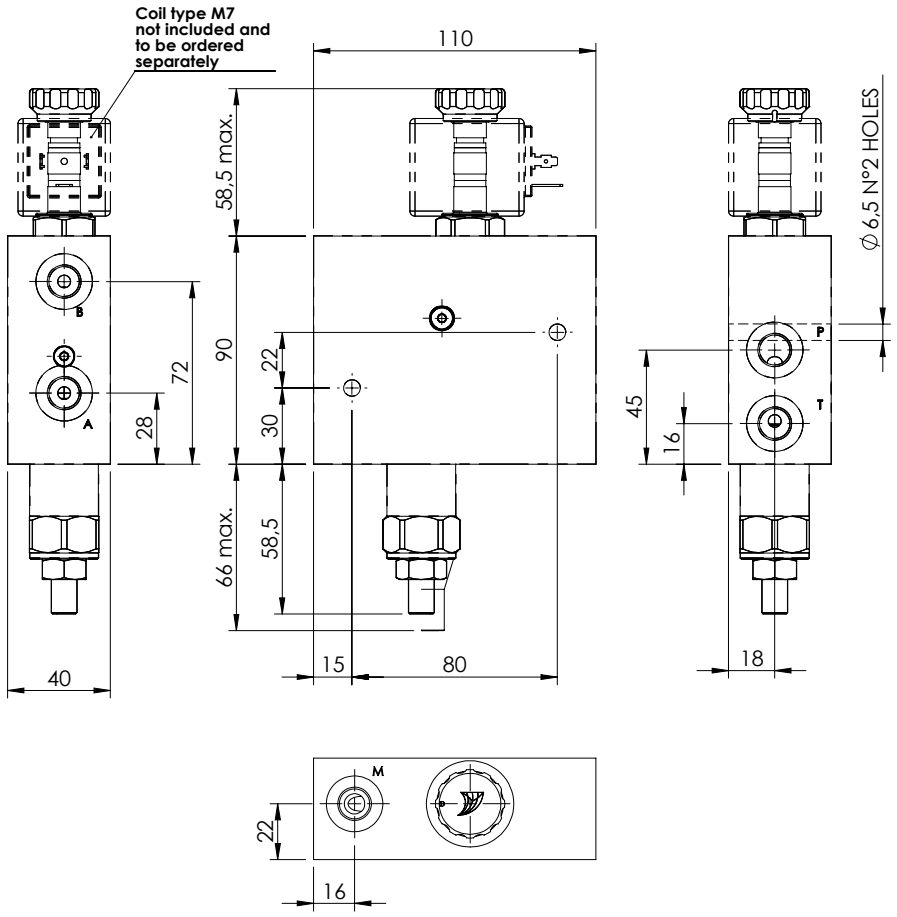

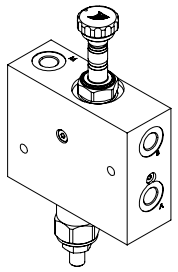

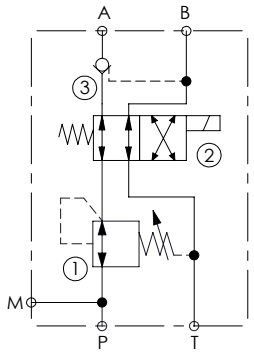

SPECIFICATIONS

Max. operating pressure:	380 bar
Rated flow:	10 l/min
Manifold:	Steel
Weight:	3,2 kg
Coil Type:	M7

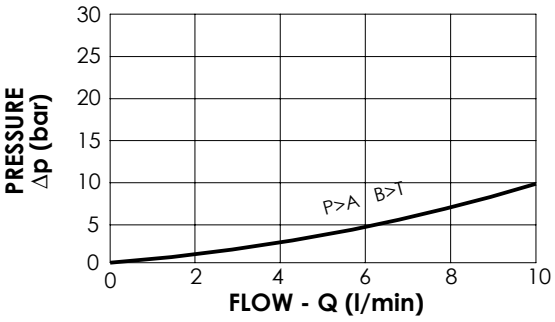

SEALING CAP

Ordering code:

AT000022

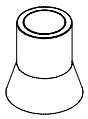

ORDERING CODES

Quick code	Description	Main ports size	Standard setting (bar, Q=5 l/min)	Adjustm. range (bar)	Pressure increase (bar/turn)
BD000095	BDEF-010-ALRV-NP-G14-V380	P, T, A, B, M: G 1/4"	340	70 - 350	114

EXCAVATORS VALVE

BNND-010-AERV

AUXILIARY QUICK HITCH

ATLANTIC Fluid Tech

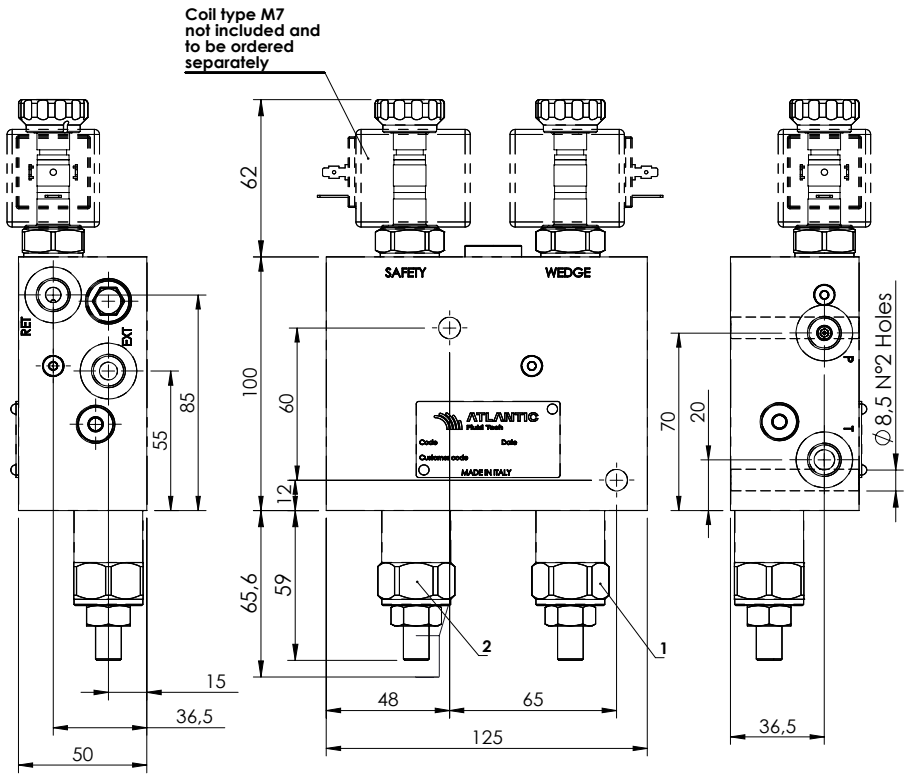

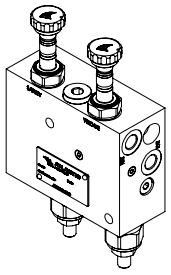

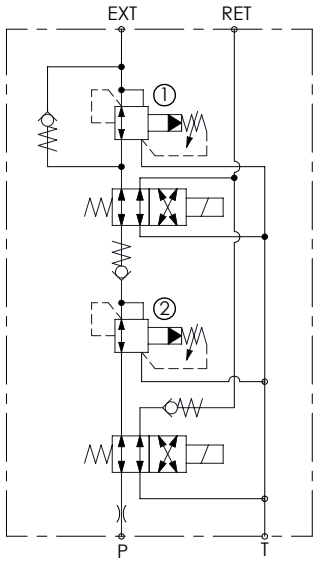

SPECIFICATIONS

Max. operating pressure:	350 bar
Rated flow:	10 l/min
Manifold:	Steel
Weight:	4,9 kg
Coil Type:	M7

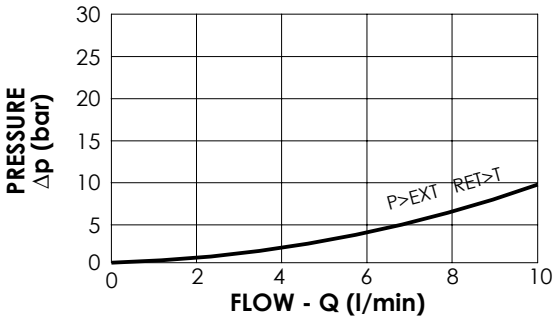

SEALING CAP

Ordering code:

AT000022

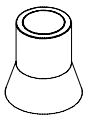

ORDERING CODES

Quick code	Description	Main ports size	Standard setting (bar, Q=5 l/min)	Adjustm. range (bar)	Pressure increase (bar/turn)
BD000207	**BNND-010-AERV-NP-G14-N350**	P,T,A,B M: **G 1/4"**	① :120 ② :240	**70 - 350**	**114**

EXCAVATORS VALVE

BNND-100-ALBE

EXCAVATOR ATTACHMENT FUNCTION - G 1/2"

ATLANTIC Fluid Tech

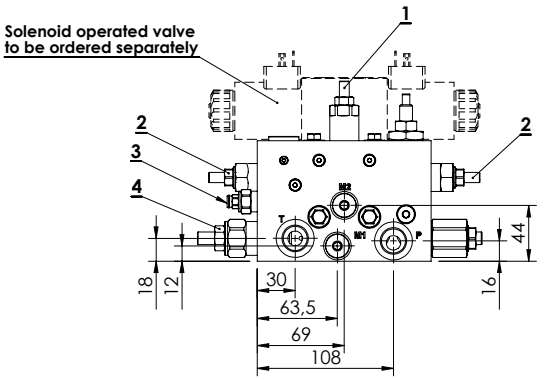

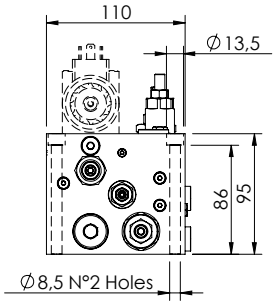

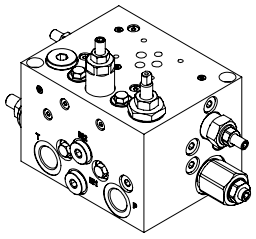

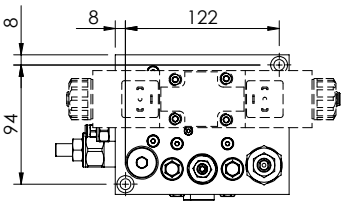

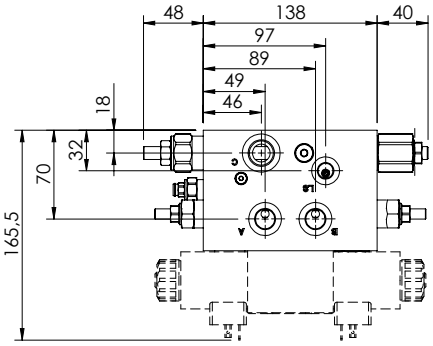

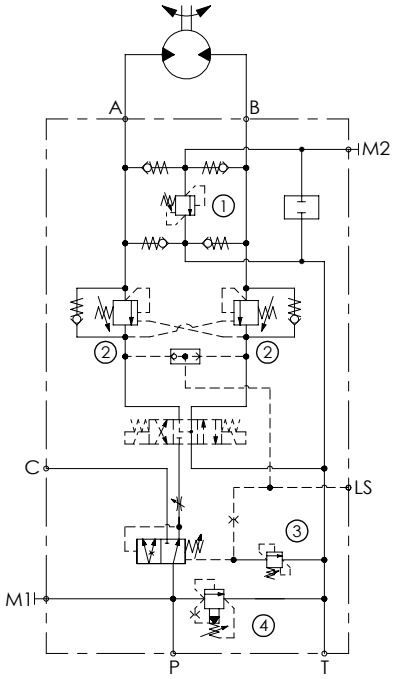

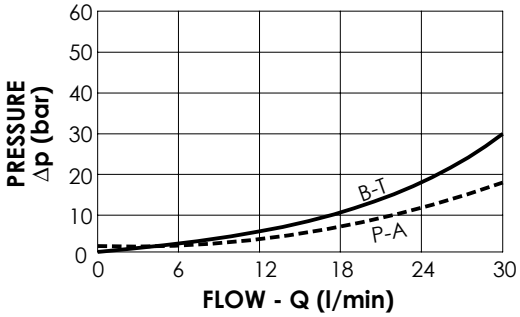

SPECIFICATIONS

Max. operating pressure:	350 bar
Rated flow:	Q max inlet : 100 l/min Q in A - B : 30 l/min
Manifold:	Steel zincplated
Weight:	10,96 kg

NOTES

Our spring on the compensator is adjustable from 5 to 15 bar, the max flow in A and B depend on the Δp curve of the electrical valve.

ORDERING CODES

Quick code	Description	Pilot ratio	Main ports size	Standard setting (bar, Q=5 l/min)	Adjust. range (bar)	Pressure increase (bar/turn)
BD000081	Excavator attachment function - G 1/2	4 : 1	P-T-C: G1/2" A-B: G3/8" M1-M2-LS: G1/4"	① 220 ③ 200 ② 260 ④ 250	①② 100-350 ③ 120-350 ④ 140-350	① 91 ③ 165 ② 184 ④ 114

EXCAVATORS VALVE

BNND-200-ALBE

EXCAVATOR ATTACHMENT FUNCTION - G 3/4" SAE 6000

ATLANTIC Fluid Tech

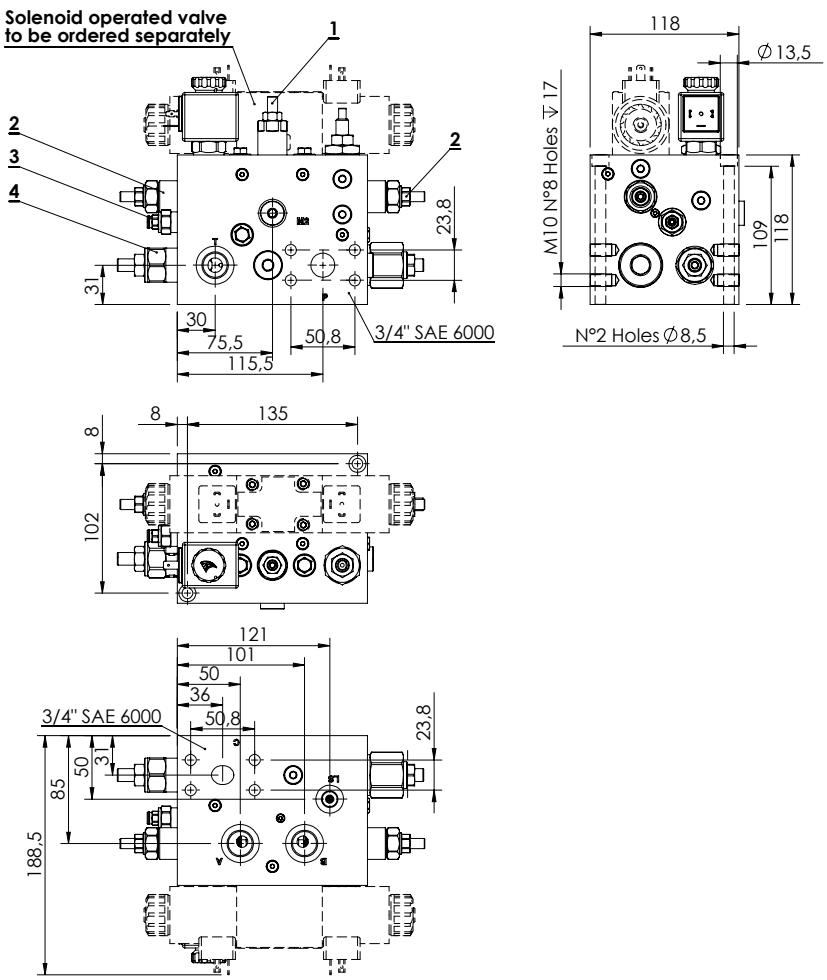

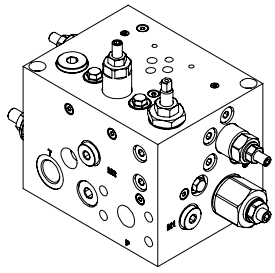

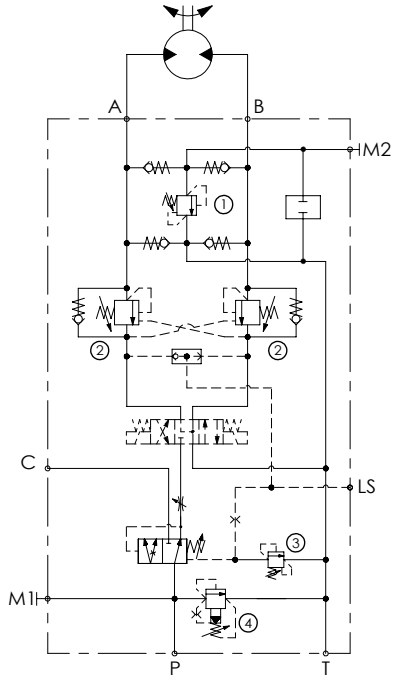

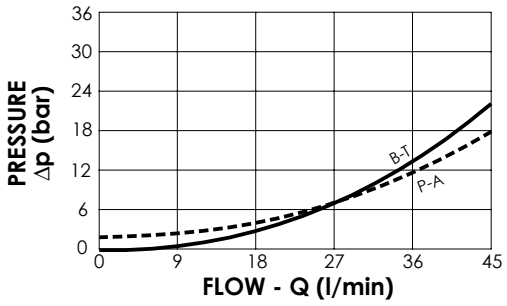

SPECIFICATIONS

Max. operating pressure:	350 bar
Rated flow:	Q max inlet : 200 l/min Q in A - B : 45 l/min
Manifold:	Steel zincplated
Weight:	16,01 kg

NOTES

Our spring on the compensator is adjustable from 5 to 15 bar, the max flow in A and B depend on the Δp curve of the electrical valve.

ORDERING CODES

Quick code	Description	Pilot ratio	Main ports size	Standard setting (bar, Q=5 l/min)	Adjust. range (bar)	Pressure increase (bar/turn)
BD000082	Excavator attachment function - 3/4" SAE 6000	4 : 1	P-C: G3/4" SAE 6000 A-B-T: G3/4" M1-M2-LS: G1/4"	① 220 ③ 200 ② 260 ④ 250	①② 100-350 ③ 120-350 ④ 140-350	① 91 ③ 165 ② 138 ④ 114

EXCAVATORS VALVE

BNND-300-ALBE

EXCAVATOR ATTACHMENT FUNCTION - G 1" SAE 6000

ATLANTIC Fluid Tech

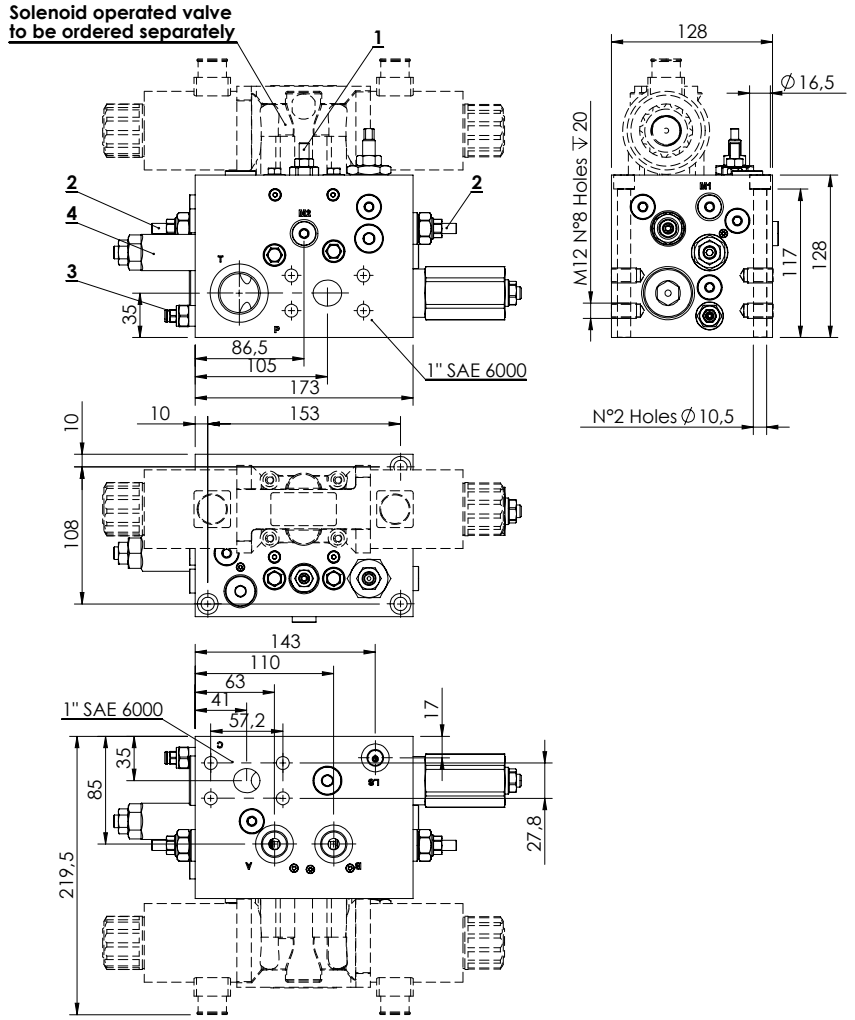

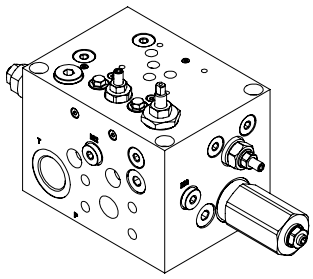

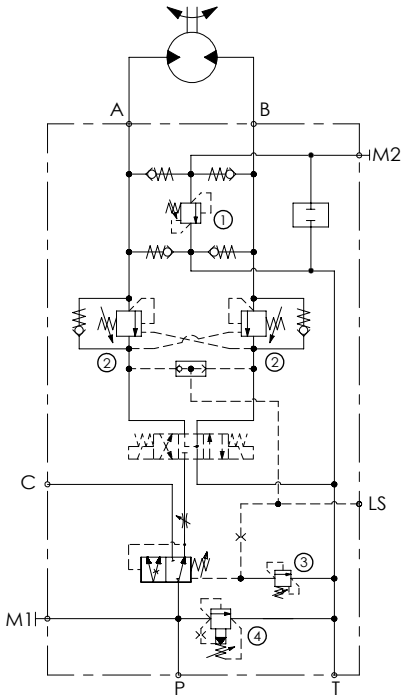

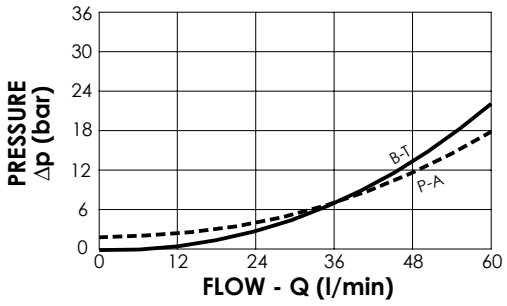

SPECIFICATIONS

Max. operating pressure:	350 bar
Rated flow:	Q max inlet : 300 l/min Q in A - B : 60 l/min
Manifold:	Steel zincplated
Weight:	26,76 kg

NOTES

Our spring on the compensator is adjustable from 5 to 15 bar, the max flow in A and B depend on the Δp curve of the electrical valve.

ORDERING CODES

Quick code	Description	Pilot ratio	Main ports size	Standard setting (bar, Q=5 l/min)	Adjust. range (bar)	Pressure increase (bar/turn)
BD000083	Excavator attachment function - 1" SAE 6000	4 : 1	P-C: G1" SAE 6000 A-B-T: G1/2" M1-M2-LS: G1/4"	① 220 ③ 200 ② 260 ④ 250	①② 100-350 ③ 120-350 ④ 140-270	① 91 ③ 165 ② 138 ④ 49

EXCAVATORS VALVE

MDRC-200-SLVN

AUXILIARY SELECTOR VALVE

ATLANTIC Fluid Tech

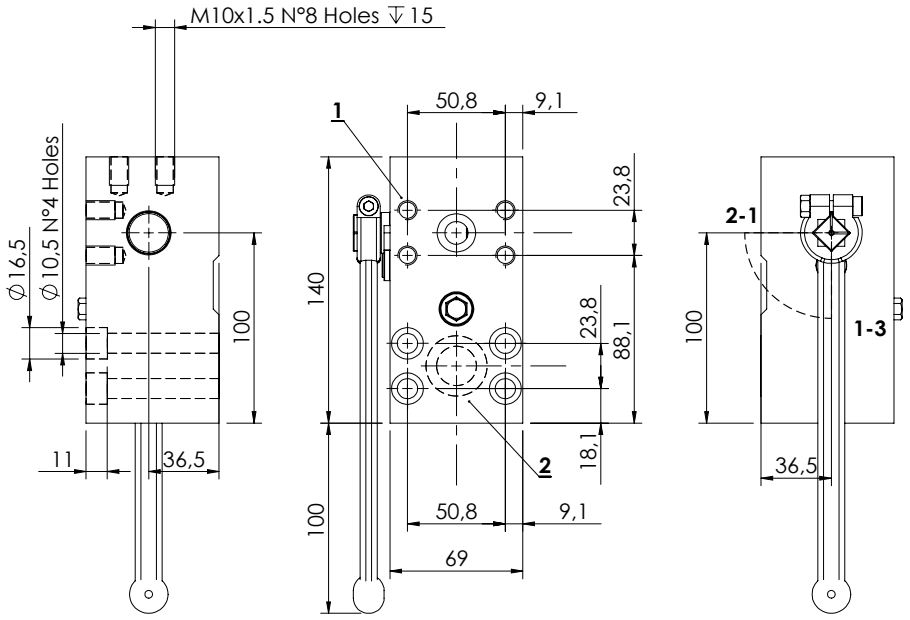

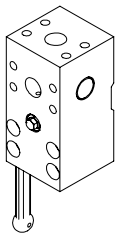

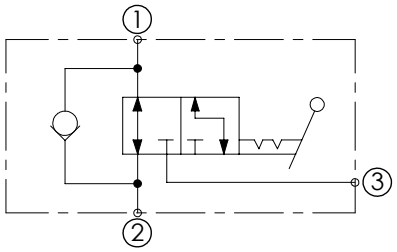

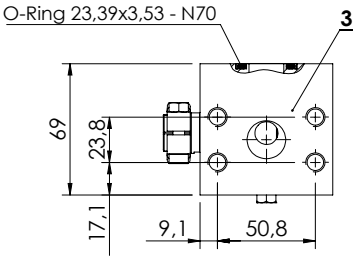

SPECIFICATIONS

Max. operating pressure:	**500 bar**
Rated flow:	**200 l/min**
Manifold:	**Steel**
Weight:	**4,86 kg**

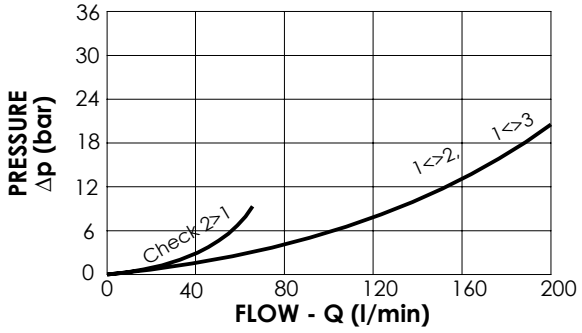

NOTES

1 to 2, leakage in 3: 20 cc @ 100 bar
1 to 3, leakage in 2: 20 cc @ 100 bar

Oil specification: 46 cSt
Oil temperature: 35°C

Handle supplied separately, not attached to the block.

ORDERING CODES

Quick code	Description	Main ports size	
MD000072	**MDRC-200-SLVN-NP-S34-N500**	**3/4" SAE 6000**	

EXCAVATORS VALVE

BPFD-060-ALSU

FLOW REGULATOR WITH RELIEF VALVE

ATLANTIC Fluid Tech

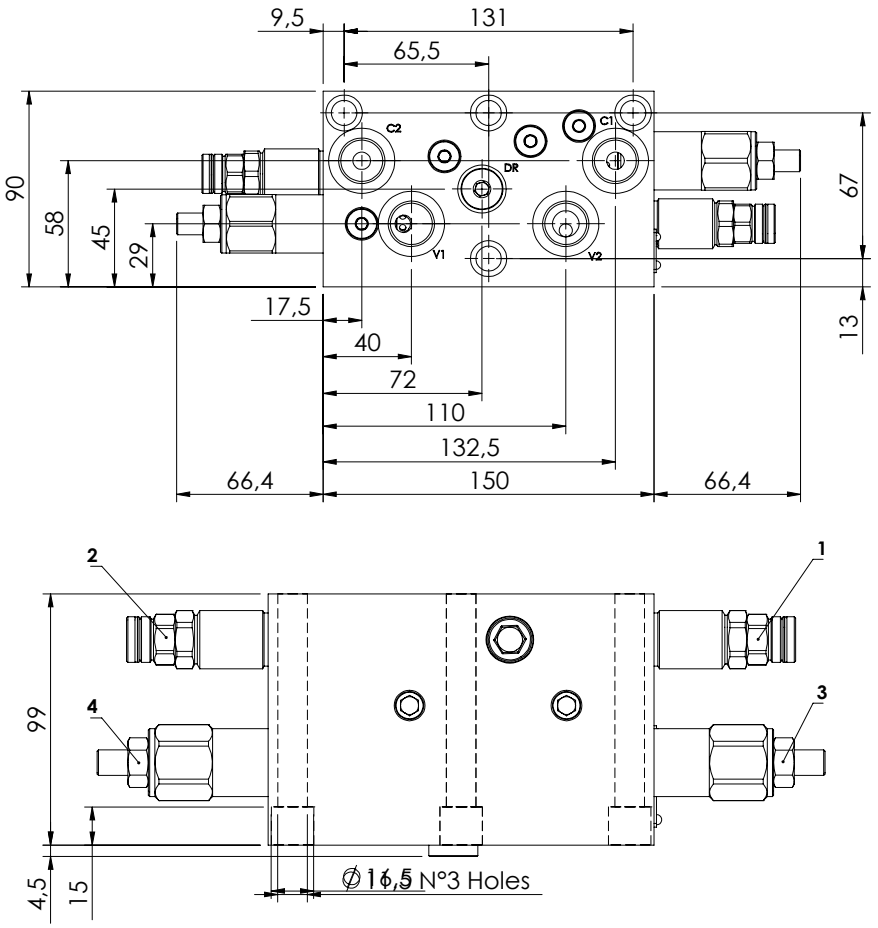

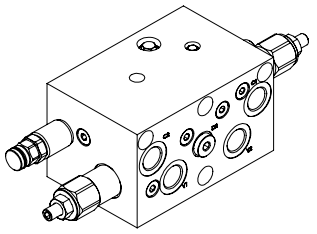

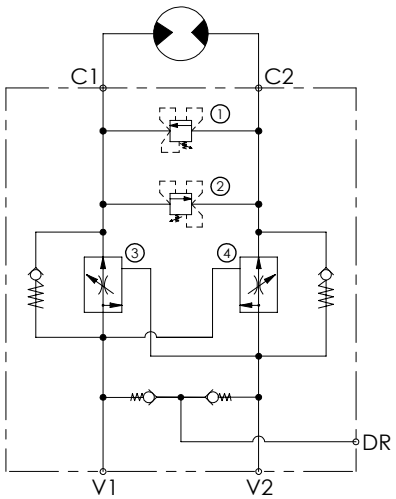

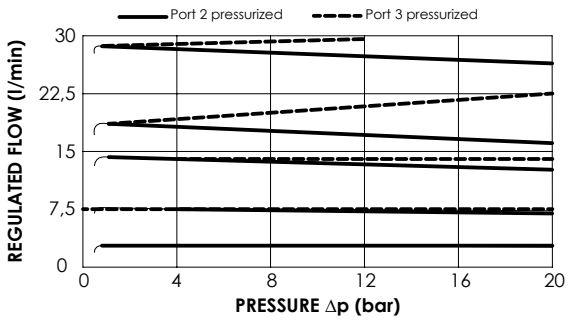

SPECIFICATIONS

Max. operating pressure:	**350 bar**
Rated flow:	**60 l/min**
Regulated Flow:	**30 l/min**
Manifold:	**Steel**
Weight:	**9,79 kg**
Coil:	

ORDERING CODES

Quick code	Description	Main ports size	Setting range (bar)	Adjustment range (bar)	Pressure increase (bar/turn)
BP000039	**BPFD-060-ALSU-FT-G12-N350**	V1,V2,C1,C2: **G 1/2"** DR: **G 1/4"**	**90**	**30-100**	**20**

EXCAVATORS VALVE

BNND-070-AERC

SOLENOID ACTIVATED FLANGED

ATLANTIC Fluid Tech

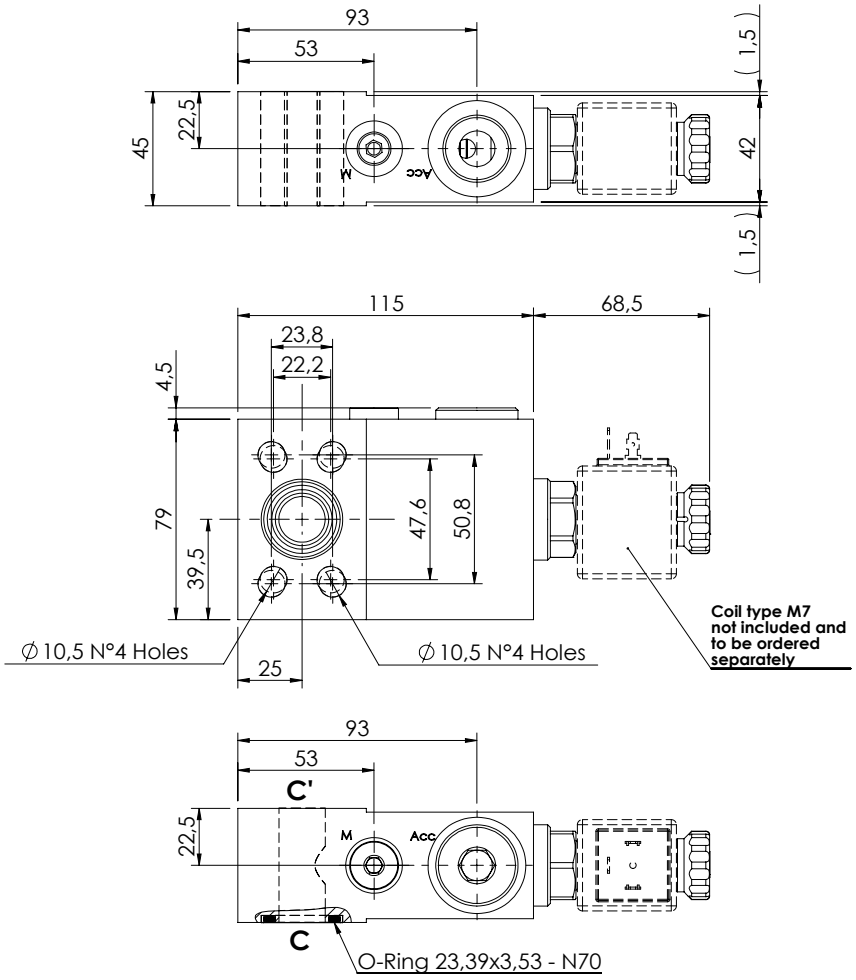

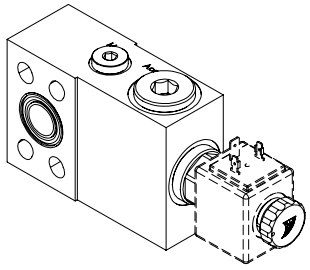

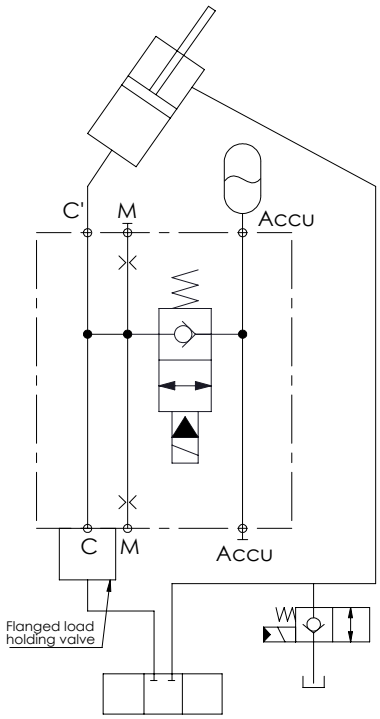

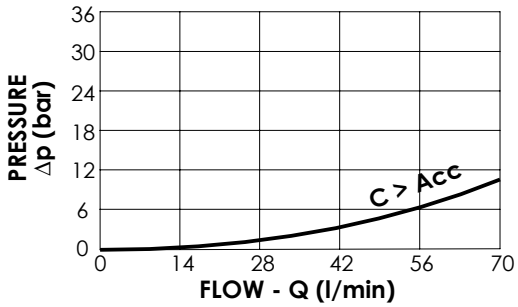

SPECIFICATIONS

Max. operating pressure:	**420 bar**
Rated flow:	**70 l/min**
Manifold:	**Steel**
Weight:	**2,96 kg**
Coil type:	**M7**

ORDERING CODES

Quick code	Description	Main ports size	
BD000065	**BNND-070-AERC-00-S34-N350**	C,C': **3/4" SAE 3000/6000** Acc: **G 3/4"** M: **G 1/4"**	

EXCAVATORS VALVE

BNND-070-AERC

SOLENOID ACTIVATED FLANGED

ATLANTIC Fluid Tech

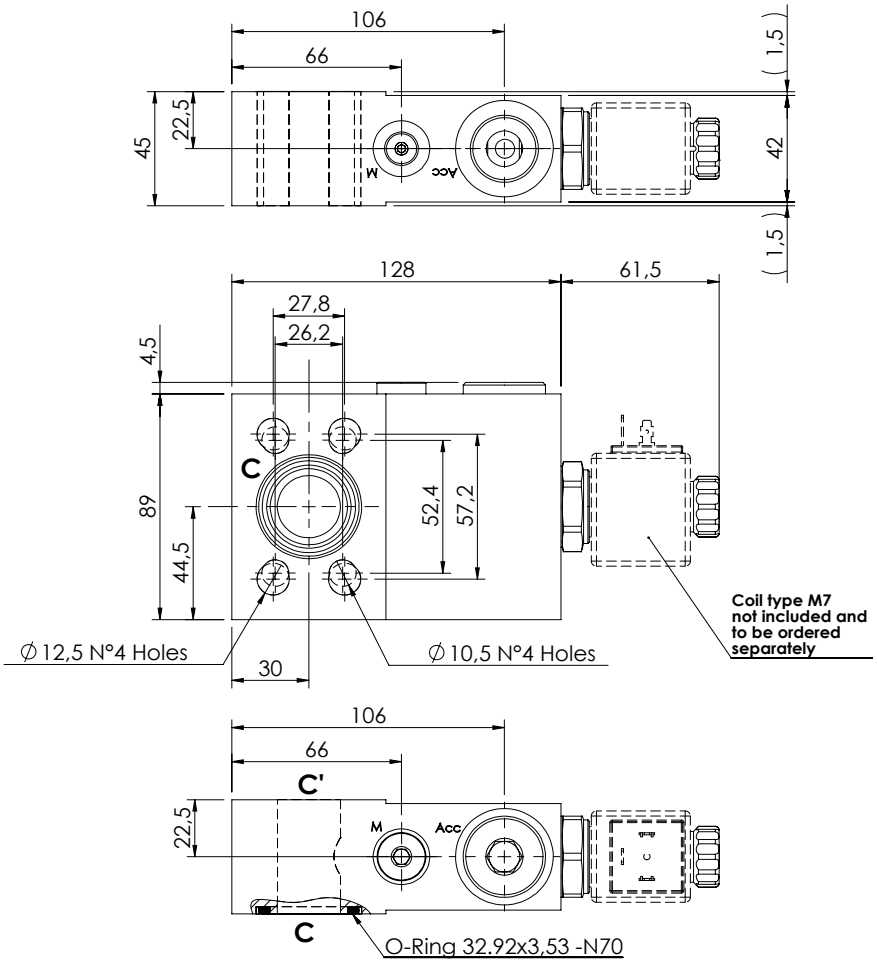

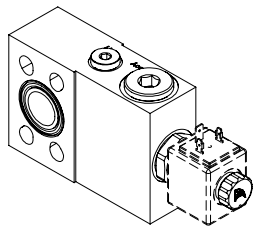

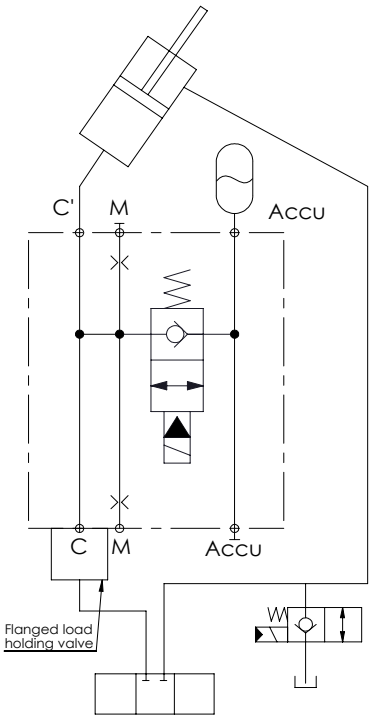

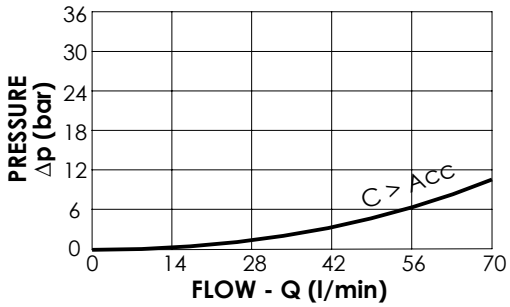

SPECIFICATIONS

Max. operating pressure:	**420 bar**
Rated flow:	**70 l/min**
Manifold:	**Steel**
Weight:	**3,54 kg**
Coil type:	**M7**

ORDERING CODES

Quick code	Description	Main ports size	
BD000066	**BNND-070-AERC-00-S10-N350**	C, C': **1" SAE 3000/6000** Acc: **G 3/4"** M: **G 1/4"**	

APPLICATIONS - ALL TERRAIN CRANES

Hydraulic scheme	Valve description	Valve type	Rated flow (l/min)	Max. pressure (bar)	Installation	Main port size or cavity type	Page
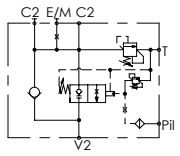	MLST-250-AAGN	-	250	350	In line	3/4" SAE 6000	20.02.**010**

ALL TERRAIN CRANES

MLST-250-AAGN

ATLANTIC Fluid Tech

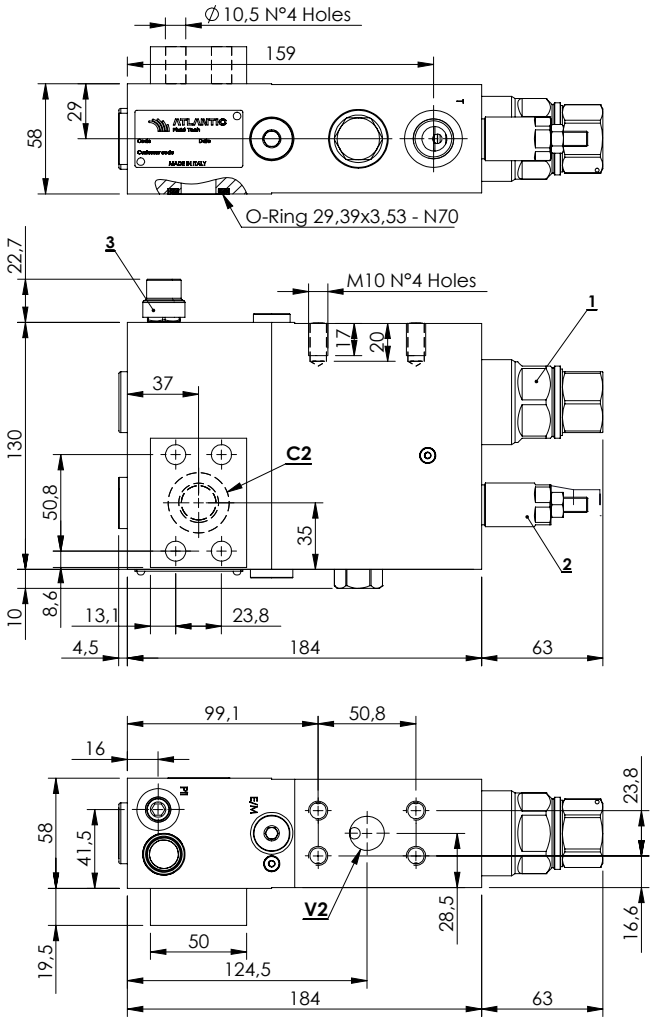

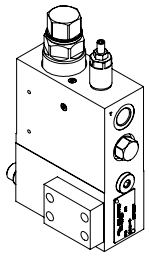

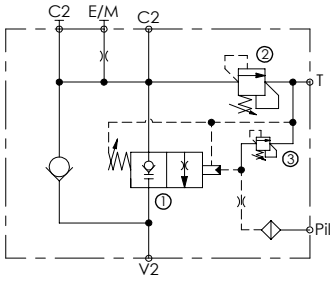

SPECIFICATIONS

Max. operating pressure:	**350 bar**
Rated flow:	**250 l/min**
Manifold:	**Steel**
Weight:	**10,56 kg**

SEALING CAP

Ordering code:

AT000020

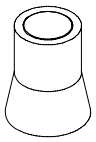

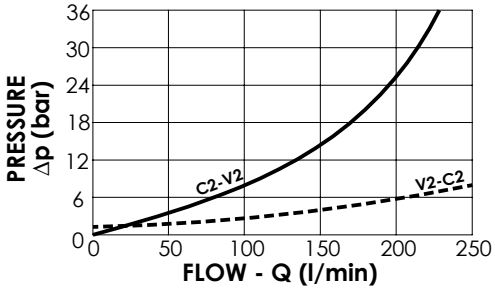

NOTES

When correctly adjusted for the special excavator installation, these valves meet the requirement of ISO 8643

Piston with grooves

ORDERING CODES

Quick code	Description	Main ports size	Standard setting (bar)	Adjust. range (bar)	Pressure increase (bar/turn)
ML000212	**MLST-250-AAGN-00-S34-N350**	V2,C2: **3/4" SAE 6000** E/M,Pil: **G 1/4"** T: **G 1/2"**	①9 Q=5 l/min ③20 C.P. ②350 Q=5 l/min	①2-15 ③10-40 ②100-350	①1,6 ③22 ② 91

APPLICATIONS - CONCRETE PUMP CRANES

ATLANTIC Fluid Tech

Hydraulic scheme	Valve description	Valve type	Rated flow (l/min)	Max. pressure (bar)	Installation	Main port size or cavity type	Page
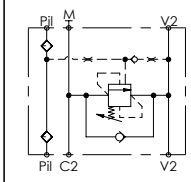	MBSN-060-ZAPF	-	60	350	Flanged	G 3/8"	20.03.**010**
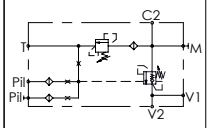	MBSN-060-AAST	-	60	350	Flanged	Ø9	20.03.**020**
	MBSN-060-AASA	-	60	350	Flanged	Ø9	20.03.**030**
	MBSN-060-APST	-	60	350	Flanged	M22x1,5	20.03.**040**
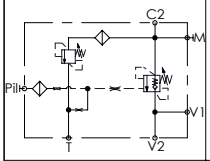	MBSN-080-APST	-	80	350	Flanged	M22x1,5	20.03.**050**
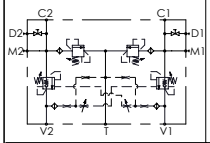	MBSN-060-ZENV	-	60	350	Flanged	Ø9	20.03.**060**

CONCRETE PUMP CRANES

MBSN-060-ZAPF

SINGLE ACTING FLANGED

ATLANTIC Fluid Tech

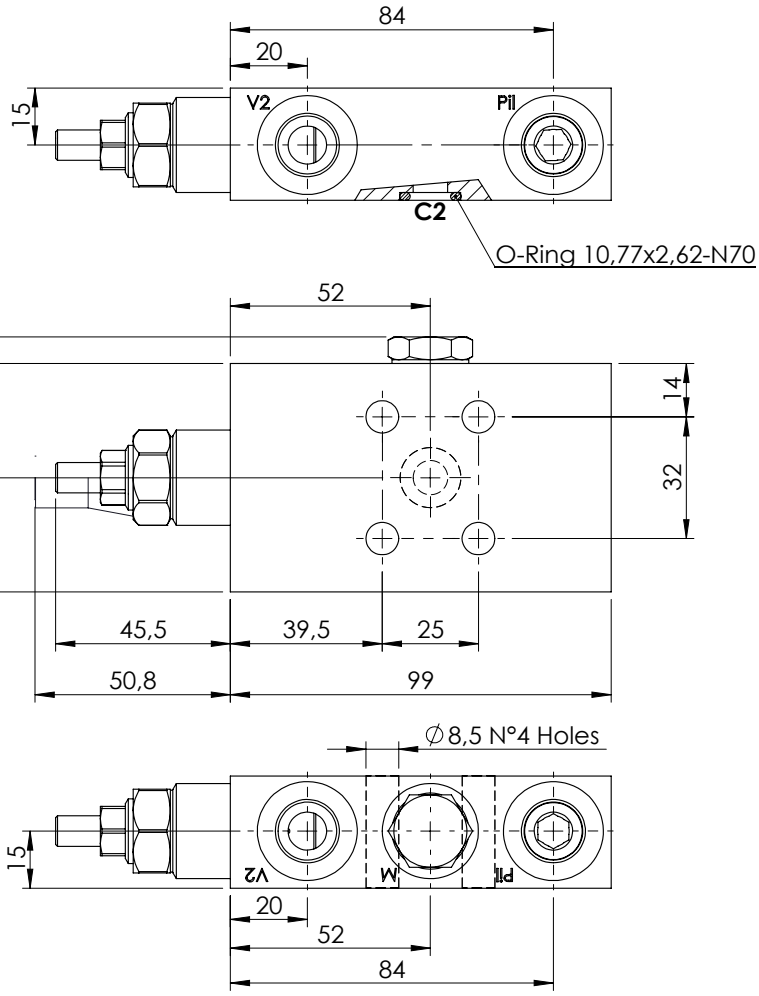

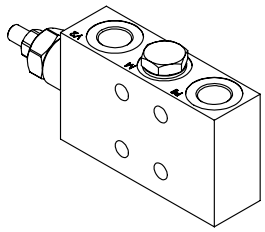

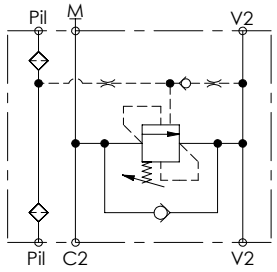

SPECIFICATIONS

Max. operating pressure:	**350 bar**
Rated flow:	**60 l/min**
Manifold:	**Aluminium**
Weight:	**0,56 kg**

SEALING CAP

Ordering code:

AT000020

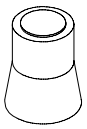

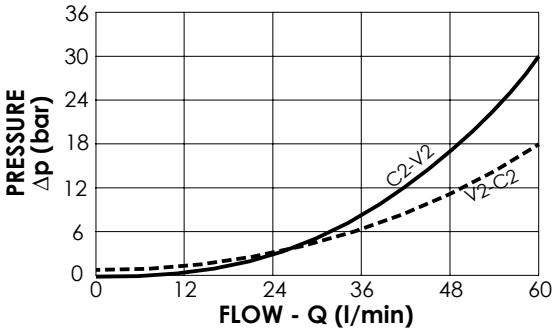

NOTES

Setting: at least 1.3 times the load induced pressure

Pilot ratio: 4,2:1
Operative pilot ratio: 2,1:1

ORDERING CODES

Quick code	Description	Main ports size	Standard setting (bar, Q=5 l/min)	Adjust. range (bar)	Pressure increase (bar/turn)
MB000461	**MBSN-060-ZAPF-02-G38-N350**	V2,Pil:**G 3/8"** M:**M12x1,5**	**340**	**100-350**	**138**

CONCRETE PUMP CRANES

MBSN-060-AAST

ATLANTIC Fluid Tech

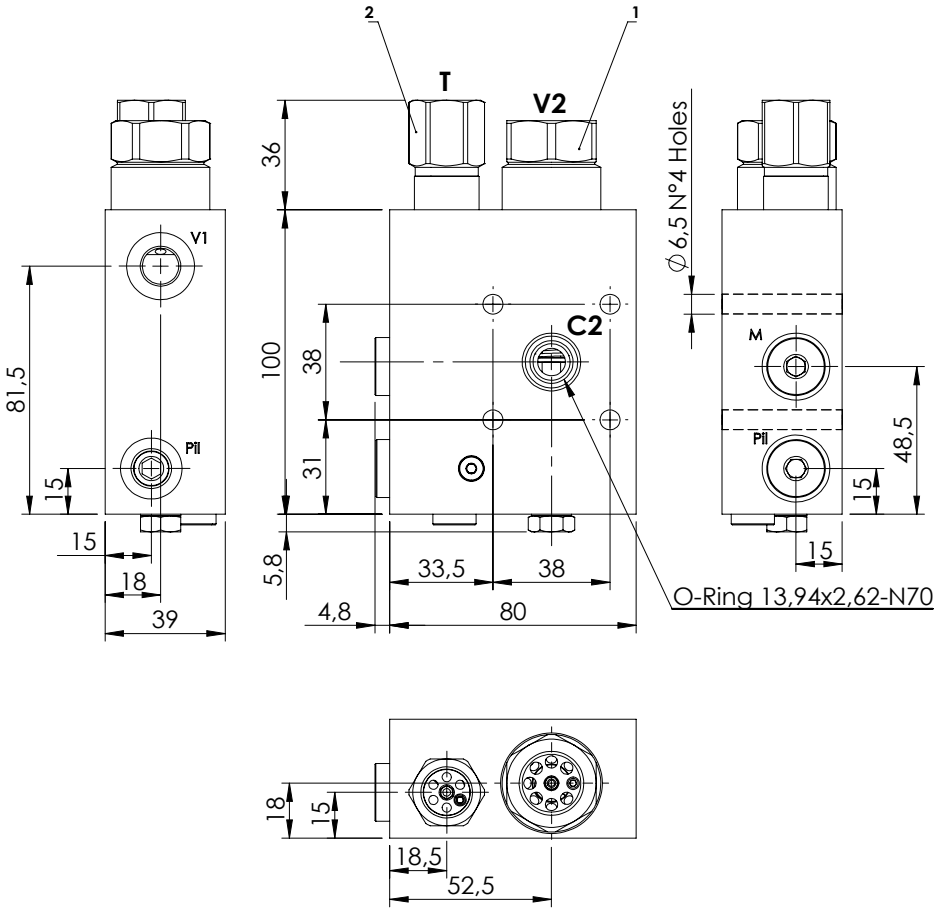

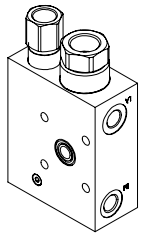

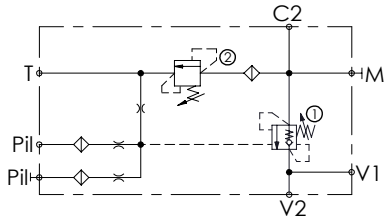

SPECIFICATIONS

Max. operating pressure:	**500 bar**
Rated flow:	**60 l/min**
Manifold:	**Steel**
Weight:	**2,42 kg**

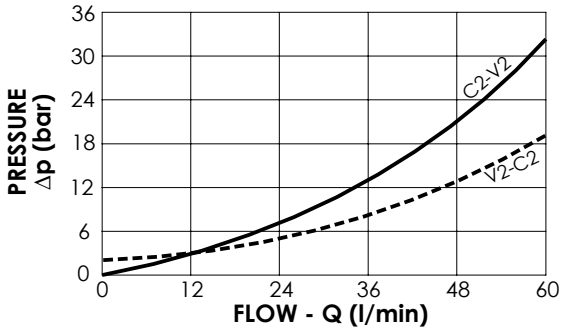

NOTES

Setting: at least 1.3 times the load induced pressure

Pilot ratio: 7:1
Operated pilot ratio: 3,6:1

ORDERING CODES

Quick code	Description	Main ports size	Standard setting (bar, Q=5 l/min)	Adjust. range (bar)	Pressure increase (bar/turn)
MB000101	**MBSN-060-AAST-04-G12-N500**	**V1,Pil,M:**G1/4" **T:**G3/8" **V2:**G1/2" **C2:**Ø9	**①:450** **②:450**	**①:200-450** **②:150-500**	**①:366** **②:167**

CONCRETE PUMP CRANES

MBSN-060-AASA

ATLANTIC Fluid Tech

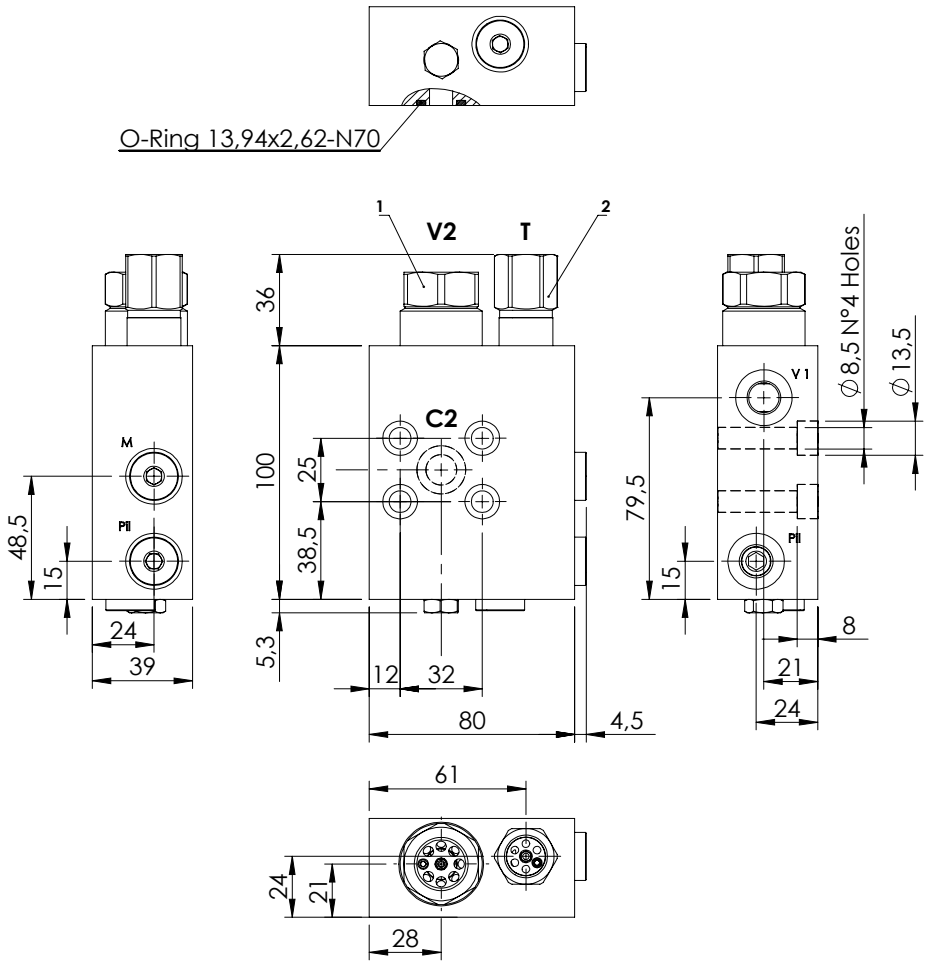

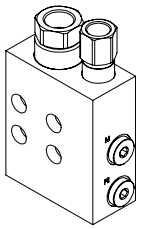

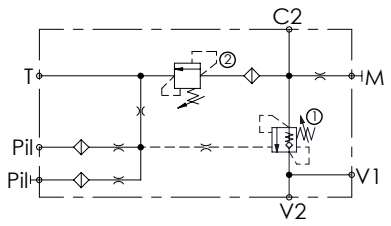

SPECIFICATIONS

Max. operating pressure:	**500 bar**
Rated flow:	**60 l/min**
Manifold:	**Steel**
Weight:	**2,38 kg**

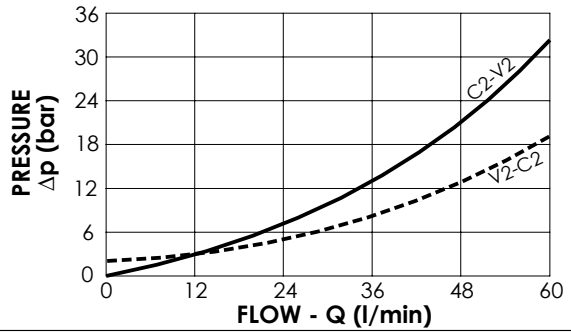

NOTES

Setting: at least 1.3 times the load induced pressure

Pilot ratio: 7:1
Operated pilot ratio: 2,5:1

ORDERING CODES

Quick code	Description	Main ports size	Standard setting (bar, Q=5 l/min)	Adjust. range (bar)	Pressure increase (bar/turn)
MB000088	**MBSN-060-AASA-02-G12-N500**	V2: **G1/2"** T:**G 3/8"** M: **G1/8"** V1,Pil: **G1/4"** C2: **Ø9**	**①:420** **②:280**	**①:200-450** **②:100-350**	**①:366** **②:102**

CONCRETE PUMP CRANES

MBSN-060-APST

ATLANTIC Fluid Tech

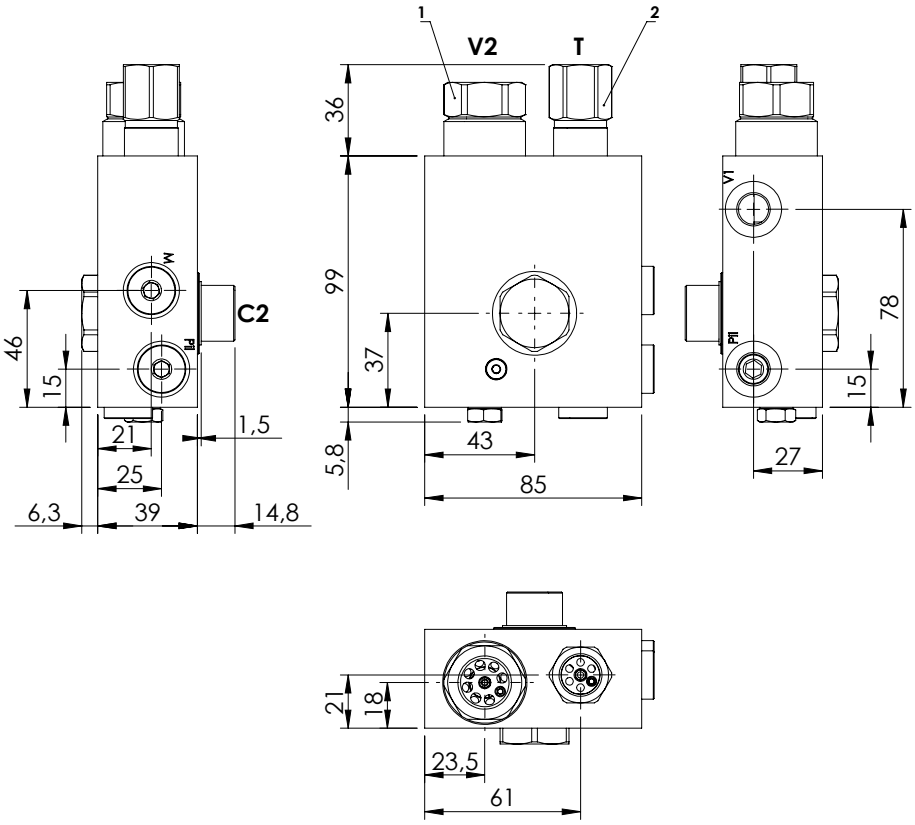

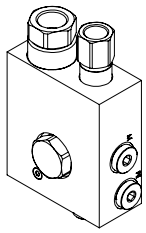

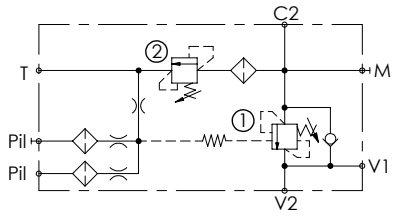

SPECIFICATIONS

Max. operating pressure:	**420 bar**
Rated flow:	**60 l/min**
Manifold:	**Steel**
Weight:	**2,61 kg**

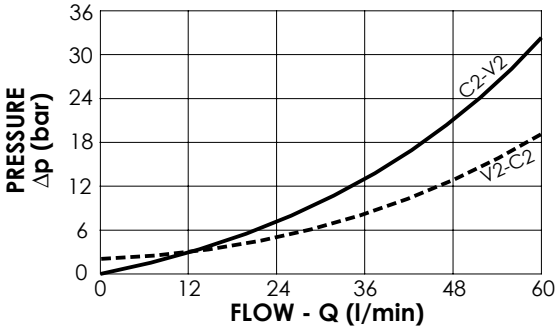

NOTES

Setting: at least 1.3 times the load induced pressure

Pilot ratio: 7:1

ORDERING CODES

Quick code	Description	Oper. pilot ratio	Main ports size	Standard setting (bar, Q=5 l/min)	Adjust. range (bar)	Pressure increase (bar/turn)
MB000823	**MBSN-060-APST-01-M22-N420**	**1,5:1**	**T:**G3/8" **V2:**G1/2" **V1,M,Pil:**G1/4" **C2:**M22x1,5	**①:380** **②:400**	**①:200-420** **②:150-500**	**①:366** **②:167**
MB000824	**MBSN-060-APST-02-M22-N420**	**2,3:1**	**T:**G3/8" **V2:**G1/2" **V1,M,Pil:**G1/4" **C2:**M22x1,5	**①:210** **②:230**	**①:200-420** **②:150-500**	**①:366** **②:167**

CONCRETE PUMP CRANES

MBSN-080-APST

ATLANTIC Fluid Tech

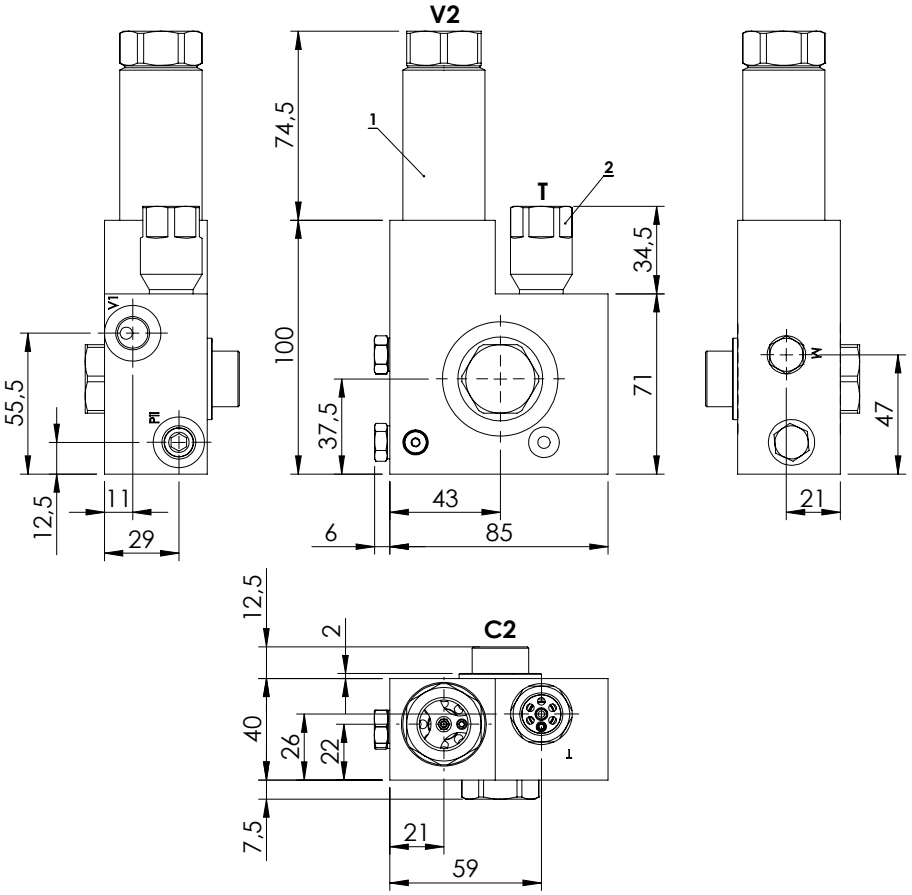

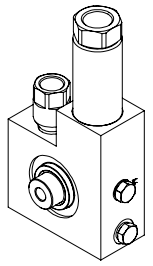

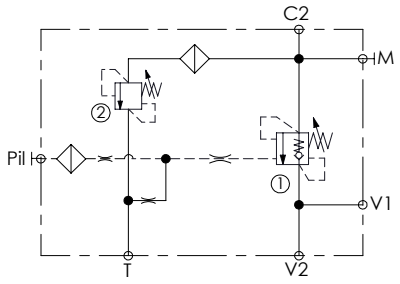

SPECIFICATIONS

Max. operating pressure:	500 bar
Rated flow:	80 l/min
Manifold:	Steel
Weight:	2,5 kg

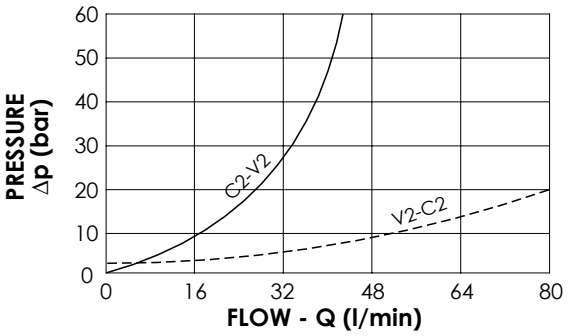

NOTES

Setting: at least 1.3 times the load induced pressure

Banjo can be installed on both sides

Pilot ratio: 7:1

ORDERING CODES

Quick code	Description	Oper. Pilot ratio	Main ports size	Standard setting (bar)	Adjust. range (bar)	Pressure increase (bar/turn)
MB000913	MBSN-080-APST-02-M22-N500	2,3:1	C2:M22x1,5 V2:G 1/2" V1,Pil:G 1/4" T:G 3/8" M:M8x1	①380 Q=5 l/min ②420 Crack. pr.	①200-450 ②250-450	①366 ②195

CONCRETE PUMP CRANES

MBSN-060-ZENV

ATLANTIC Fluid Tech

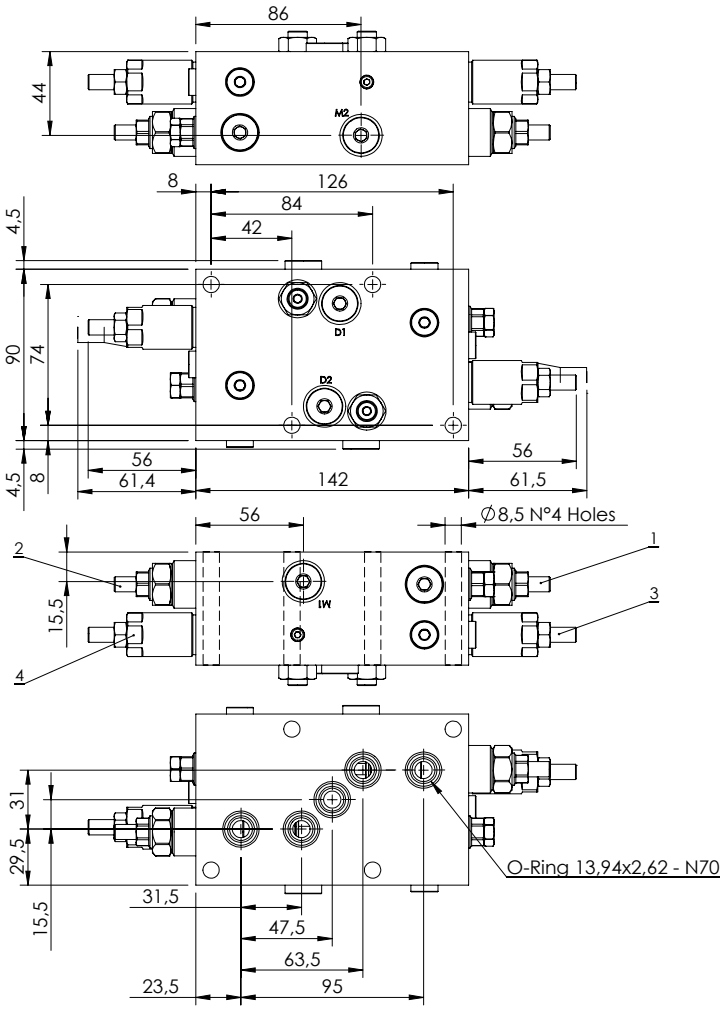

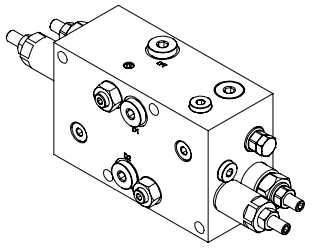

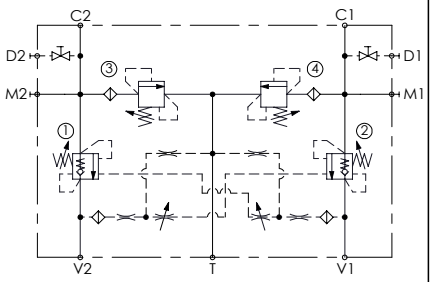

SPECIFICATIONS

Max. operating pressure:	**500 bar**
Rated flow:	**60 l/min**
Manifold:	**Aluminium**
Weight:	**2,63 kg**

SEALING CAP

Ordering code:

AT000020

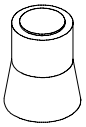

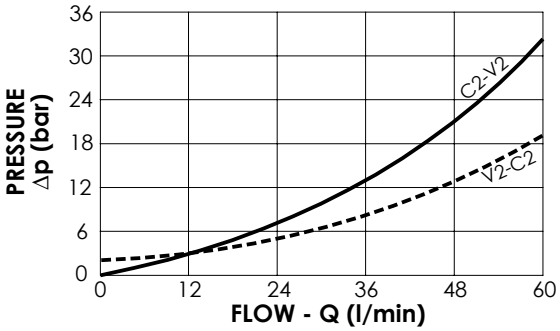

NOTES

Setting: at least 1.3 times the load induced pressure

ORDERING CODES

Quick code	Description	Pilot ratio	Main ports size	Standard setting (bar, Q=5 l/min)	Adjust. range (bar)	Pressure increase (bar/turn)
MB000931	**MBDN-060-ZENV-04-TPF-N500**	**4:1**	**C1,C2,V1,V2,T:**Ø9 **M1,M2:**G1/4"	①②**:400** ③④**:390**	①②**:250-420** ③④**:100-350**	①②**:150** ③④**:106**

APPLICATIONS - SALT SPRAYERS

ATLANTIC Fluid Tech

Hydraulic scheme	Valve description	Valve type	Rated flow (l/min)	Max. pressure (bar)	Installation	Main port size or cavity type	Page
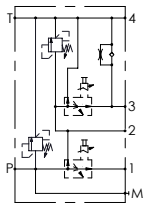	BNFN-140-LPNR-02	Proportional valve	140	250	In line	M26x1,5	20.04.**010**
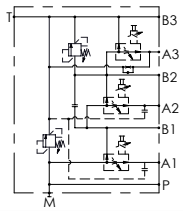	BNFN-140-LPNR-03	Proportional valve	140	250	In line	M27x1,5	20.04.**020**
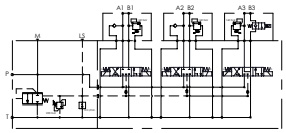		Directional valve	40	320	In line	G 3/8"	20.04.**030**
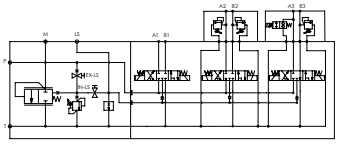		Directional valve	40	320	In line	G 3/8"	20.04.**040**

SALT SPRAYER VALVE

BNFN-140-LPNR

PROPORTIONAL VALVE

ATLANTIC Fluid Tech

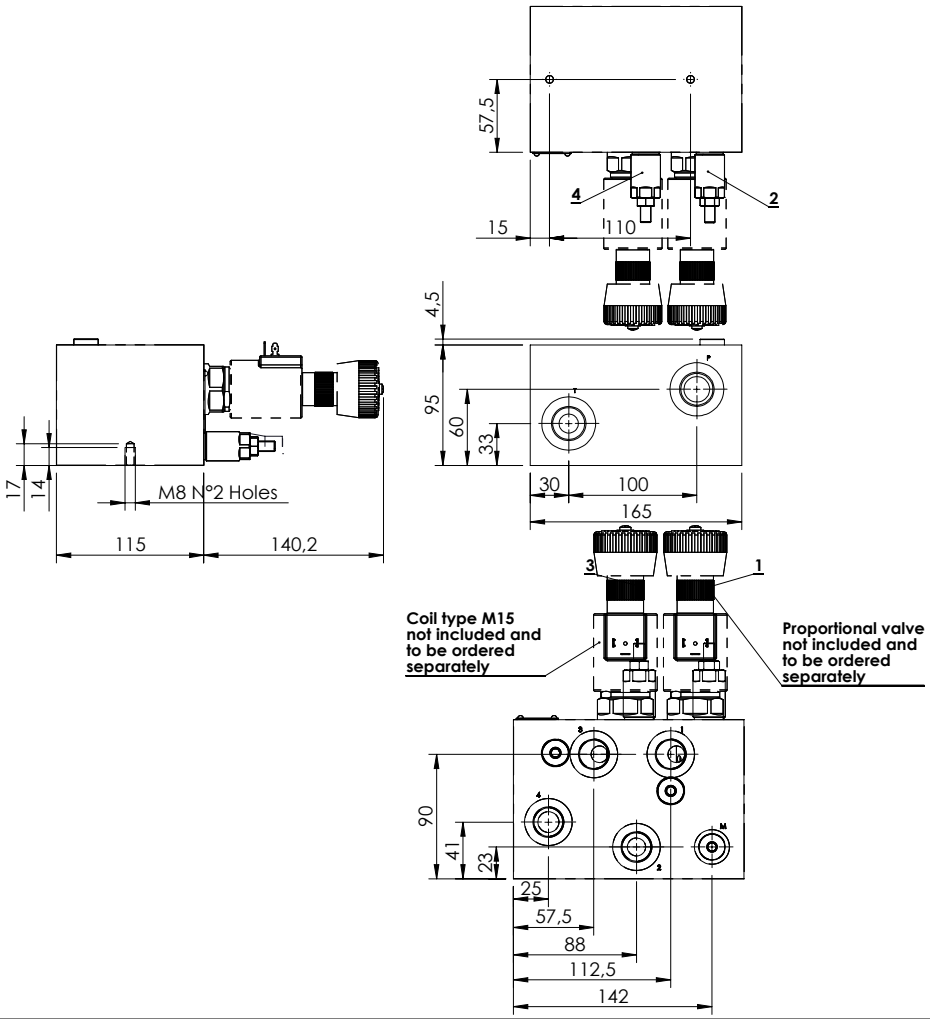

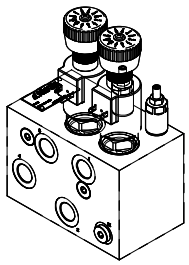

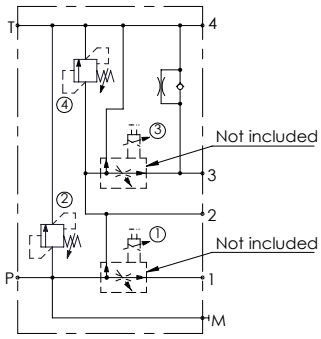

SPECIFICATIONS

Max. operating pressure:	250 bar
Rated flow:	140 l/min
Max regulated flow:	0 - 80 l/min
Manifold:	Aluminium
Weight:	4,4 kg
Coil type:	M15
Cavity type:	SAE-16-3N

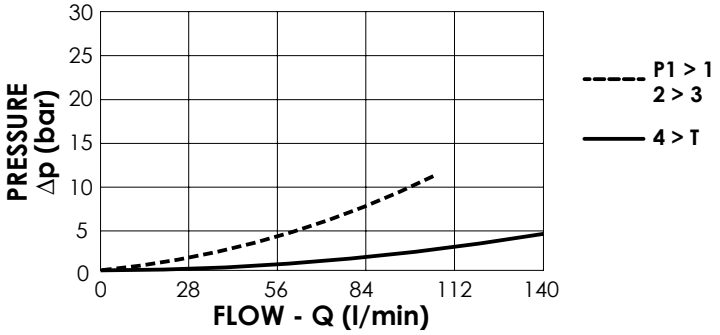

SEALING CAP:

Ordering code:

AT000020

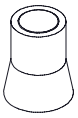

NOTES

-See chapter 18.00.000 for coils.

-See chapter 16.00.000 for proportional valve info.

ORDERING CODES

Quick code	Description	Main ports size	Standard setting (bar, Q=5 l/min)	Adjust. range (bar)	Pressure increase (bar/turn)
BF000020	**BNFN-140-LPNR-02-M26-N250**	1,2,3,4: **M22x1,5** P,T: **M27x2** M: **M14x1,5**	②:**200** ④:**100**	②:**50-210** ④:**30-100**	②:**42** ④:**20**

SALT SPRAYER VALVE

BNFN-140-LPNR

PROPORTIONAL VALVE

ATLANTIC Fluid Tech

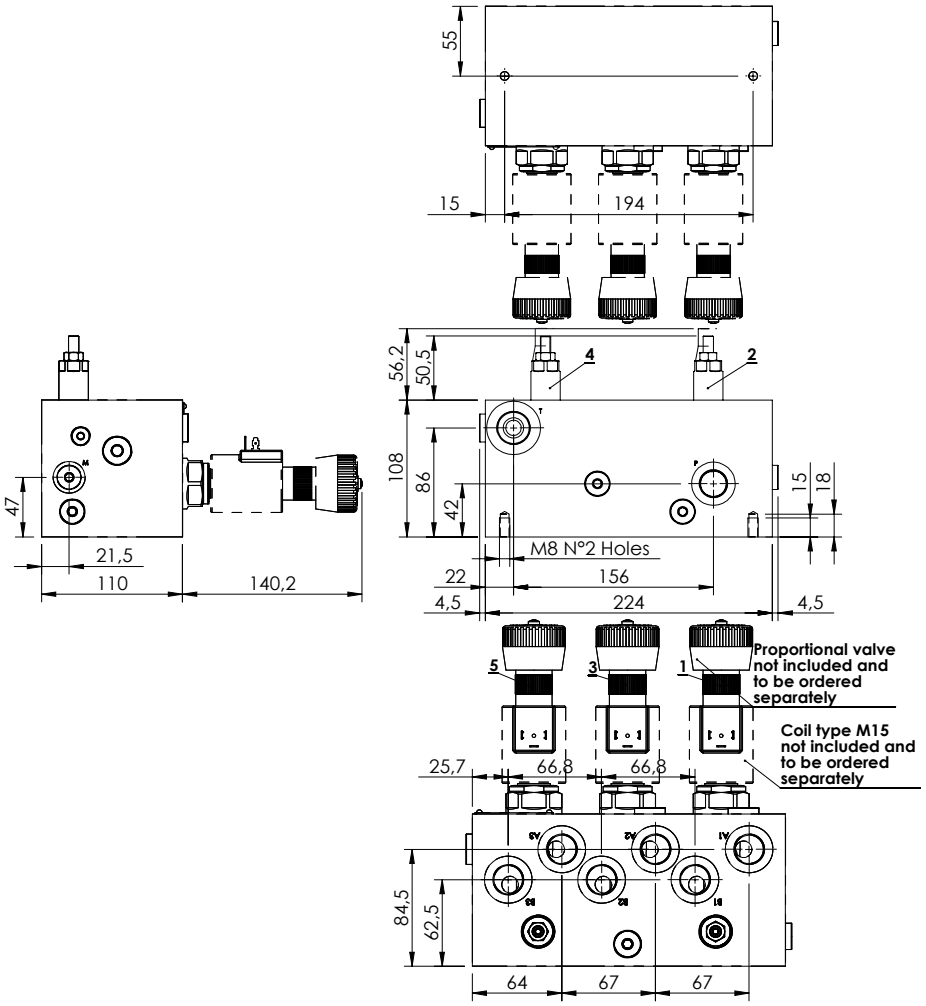

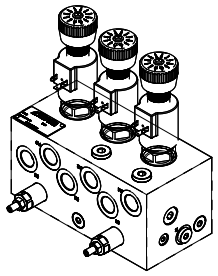

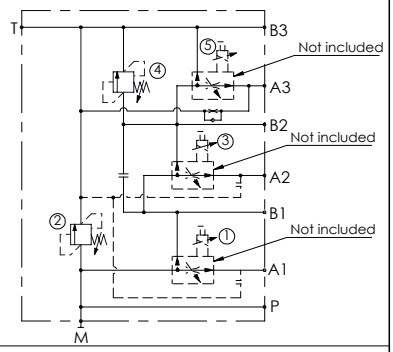

SPECIFICATIONS

Max. operating pressure:	250 bar
Rated flow:	140 l/min
Max regulated flow:	0 - 80 l/min
Manifold:	Aluminium
Weight:	6,4 kg
Coil type:	M15
Cavity type:	SAE-16-3N

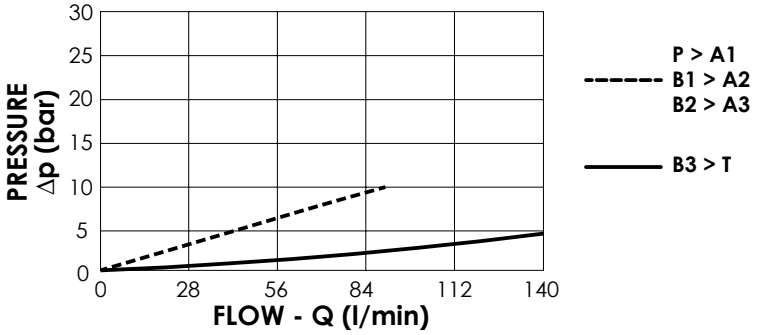

SEALING CAP:

Ordering code:

AT000020

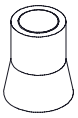

NOTES

-See chapter 18.00.000 for coils.

-See chapter 16.00.000 for proportional valve info.

ORDERING CODES

Quick code	Description	Main ports size	Standard setting (bar, Q=5 l/min)	Adjust. range (bar)	Pressure increase (bar/turn)
BF000019	**BNFN-140-LPNR-03-M26-N250**	A,B,P: **M22x1,5** T: **M26x1,5** M: **M14x1,5**	②**:200** ④**:100**	②**:50-210** ④**:30-100**	②**:42** ④**:20**

SALT SPRAYER VALVE

EBLE-040-CCSM

ATLANTIC Fluid Tech

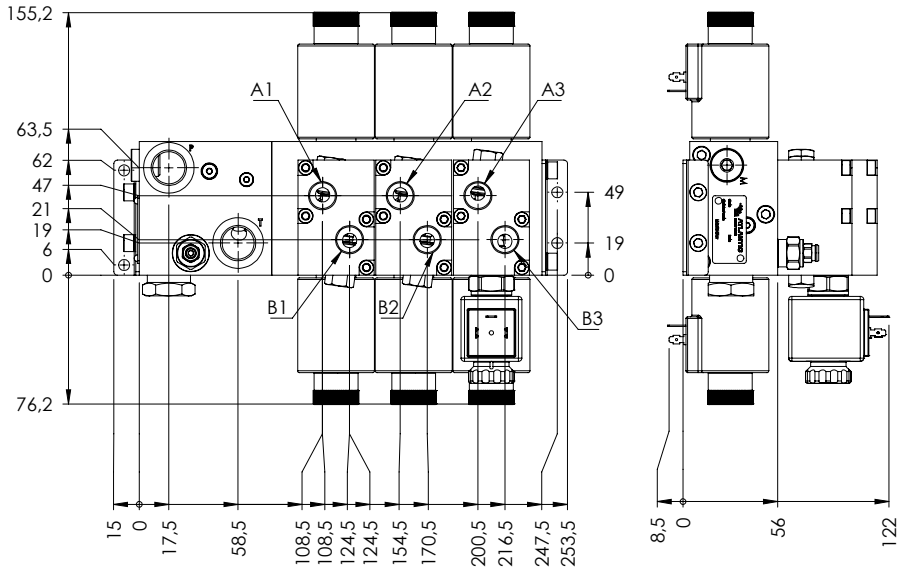

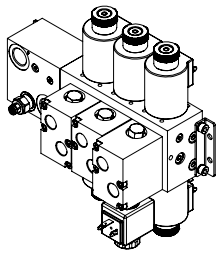

SPECIFICATIONS

Max. operating pressure:	**210 bar**
Rated flow:	**40 l/min**
Manifold:	**Cast-iron**
Weight:	**11,8 kg**

NOTES

For more informations see the chapter 19.00.000

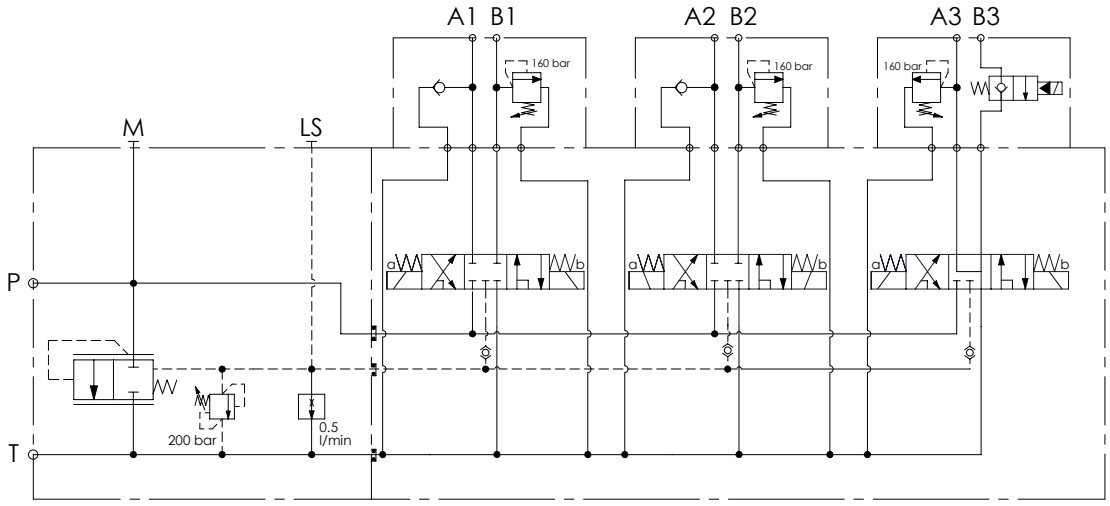

ORDERING CODES

Quick code	Description	Main ports size:	General relief setting: (bar)	Voltage: (V)	Coil type:
EB000041	**EBLE-040-CCSM-MX-G12-BHRN**	A,B: **G3/8"** P,T: **G1/2"** M: **G1/4"**	**200**	**DIN 43650**	**24**

SALT SPRAYER VALVE

EBLE-040-CCLM

ATLANTIC Fluid Tech

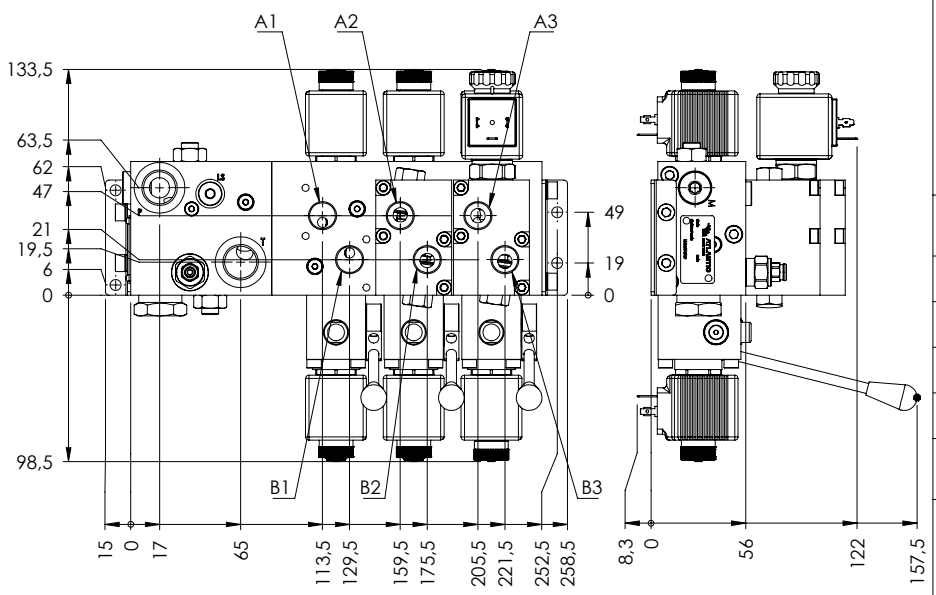

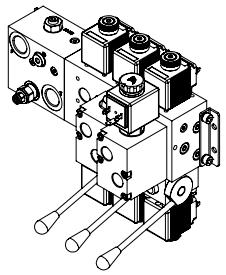

SPECIFICATIONS

Max. operating pressure:	**210 bar**
Rated flow:	**40 l/min**
Manifold:	**Cast-iron**
Weight:	**10,6 kg**

NOTES

For more informations see the chapter 19.00.000

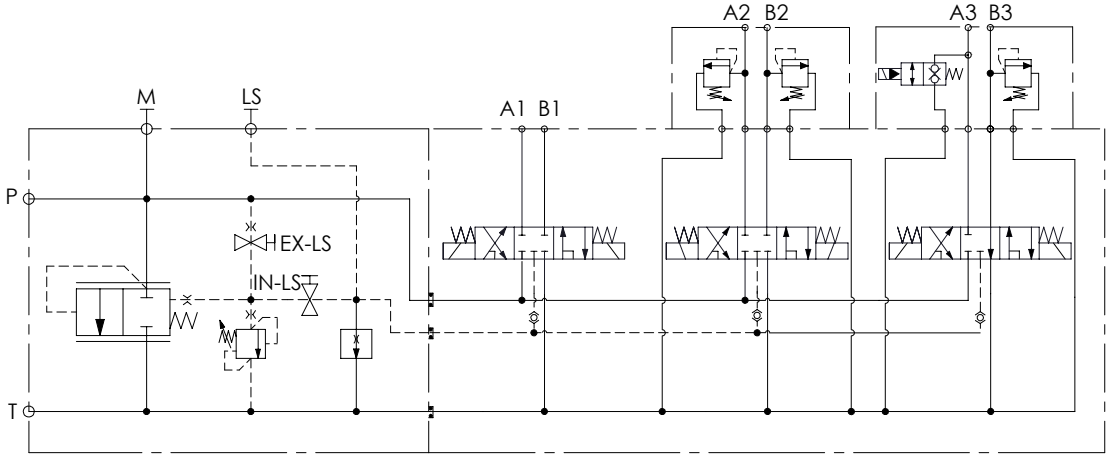

ORDERING CODES

Quick code	Description	Main ports size:	General relief setting: (bar)	Voltage: (V)	Coil type:
EB000042	**EBLE-060-CCLM-MX-G12-BHRN**	A,B: **G3/8"** P,T: **G1/2"** M: **G1/4"** LS: **G1/8"**	**200**	**DIN 43650**	**24**

APPLICATIONS - GARBAGE COMPACTORS

ATLANTIC Fluid Tech

Hydraulic scheme	Valve description	Valve type	Rated flow (l/min)	Max. pressure (bar)	Installation	Main port size or cavity type	Page
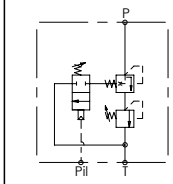	MTLN-030-TLSL	-	30	210	In line	G 1/2"	20.05.**010**
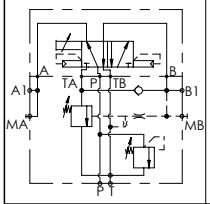	MDAF-080-BRNR	-	80	210	In line	G 1/2"	20.05.**020**
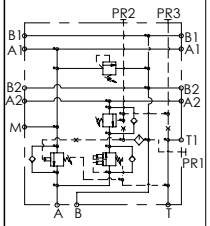	MRDN-100-ZLNP	-	100	350	In line	G 3/4"	20.05.**030**
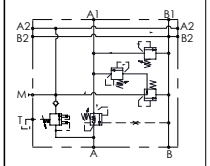	BNND-100-NLBCU	-	150	350	In line	G 3/4"	20.05.**040**

GARBAGE COMPACTORS

MTLN-030-TLSL

ATLANTIC Fluid Tech

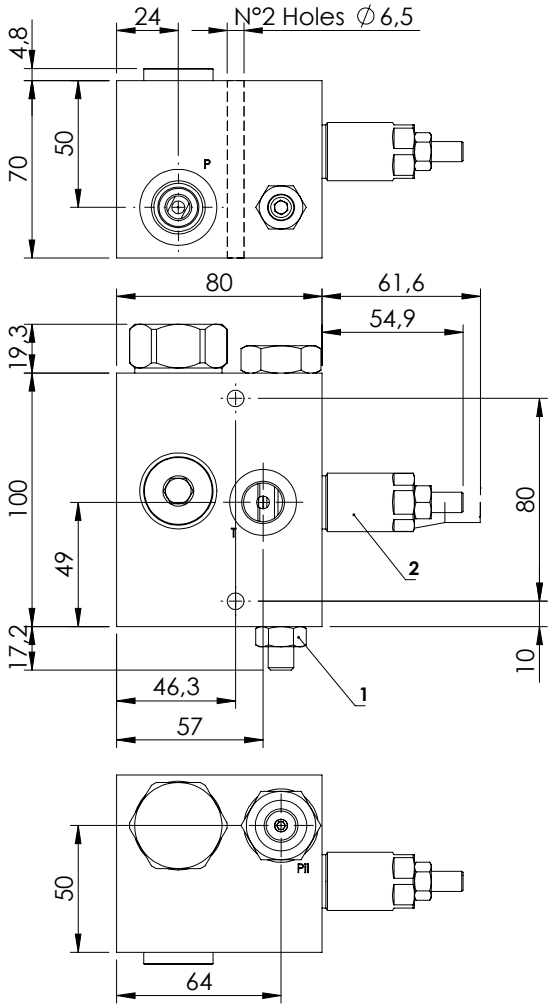

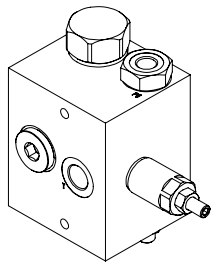

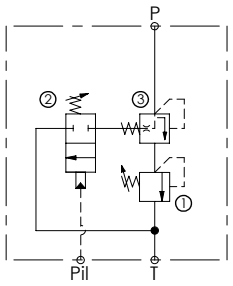

SPECIFICATIONS

Max. operating pressure:	210 bar
Rated flow:	30 l/min
Manifold:	Aluminium
Weight:	1,9 kg

SEALING CAP

Ordering code:
AT000020

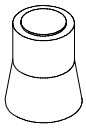

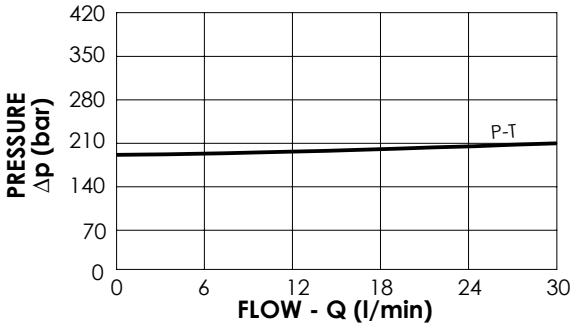

NOTES

ORDERING CODES

Quick code	Description	Main ports size	Standard setting (bar, Q=5 l/min)	Adjust. range (bar)	Pressure increase (bar/turn)
MT000008	**MTLN-030-TLSL-NP-G12-N180**	P, T:**G 1/2"** Pil:**G 1/4"**	①**:180** ②**:40**	①**:40-200** ②**:10-50**	①**:49** ②**:10**

GARBAGE COMPACTORS

MDAF-080-BRNR

REGENERATIVE FUNCTION

ATLANTIC Fluid Tech

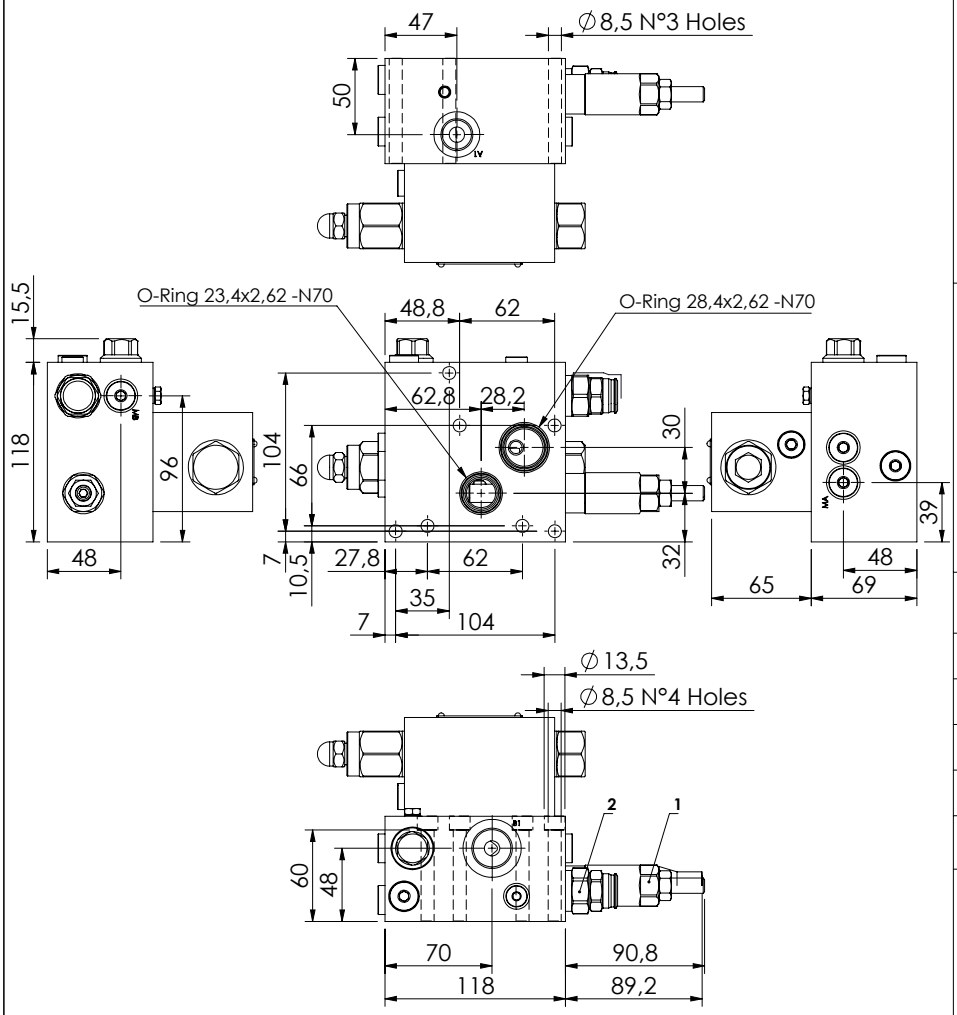

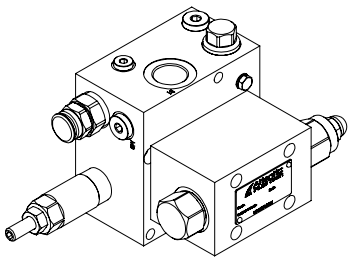

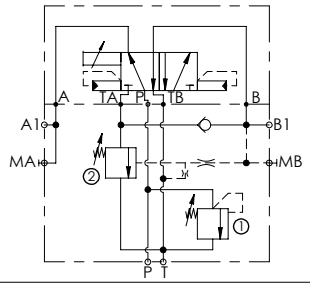

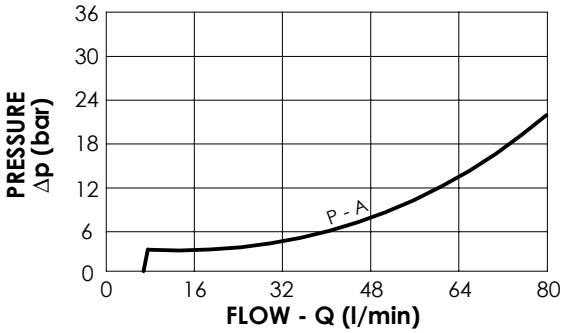

SPECIFICATIONS

Max. operating pressure:	**210 bar**
Rated flow:	**80 l/min**
Manifold:	**Aluminium**
Weight:	**5,99 kg**

SEALING CAP

Ordering code:	
AT000021 (Valve n.1)	**PT000243** (Valve n.2)

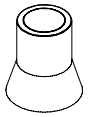

NOTES

ORDERING CODES

Quick code	Description	Main ports size	Standard setting (bar, Q=5 l/min)	Adjust. range (bar)	Pressure increase (bar/turn)
MD000023	**MDAF-080-BRNR-NP-N10-N210**	P,A1:**G1/2"** T,B1:**G3/4"** MA,MB:**G 1/4"**	①**180** ②**130**	①**100-350** ②**70-140**	①**42** ②**-**

GARBAGE COMPACTORS

MRDN-150-ZLNP

ATLANTIC Fluid Tech

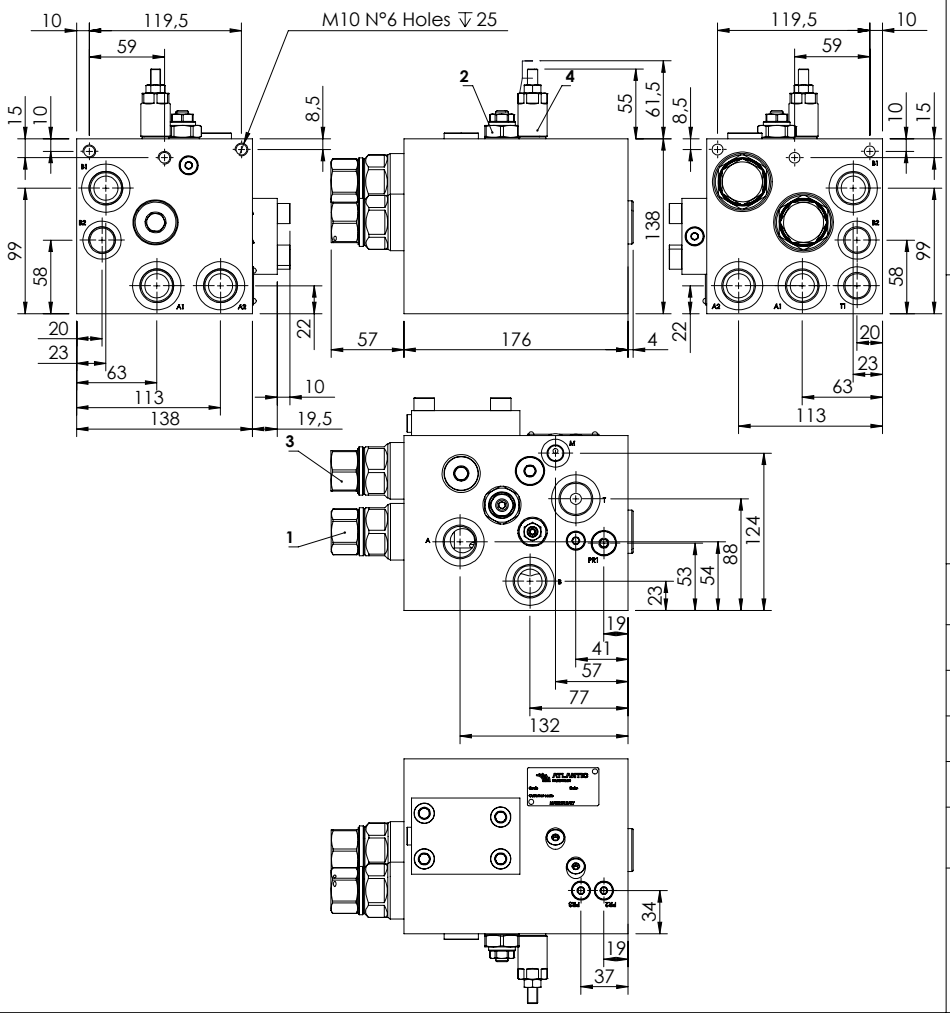

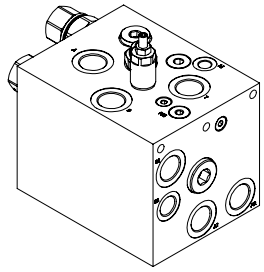

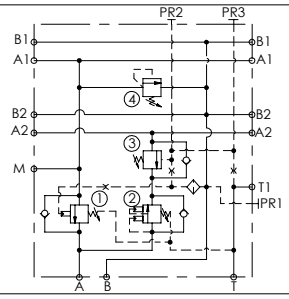

SPECIFICATIONS

Max. operating pressure:	**350 bar**
Rated flow:	**150 l/min**
Manifold:	**Aluminium**
Weight:	**10,18 kg**

SEALING CAP

Ordering code:

AT000020

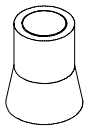

NOTES

ORDERING CODES

Quick code	Description	Pilot ratio	Main ports size	Standard setting (bar, Q=5 l/min)	Adjustment range (bar)	Pressure increase (bar/turn)
MB000700	**MRDN-150-ZLNP-06-G34-N350**	**6:1**	A,A1,A2,B,B1,T: **G3/4"** B2,T1: **G1/2"** T2,M1,T3: **G1/4"**	① **300** ③ **350** ② **175** ④ **280**	① **100-350** ③ **60-210** ② **140-350** ④ **100-350**	① **105** ③ **62** ② **70,5** ④ **91**

GARBAGE COMPACTORS

BNND-150-NLBCU

ATLANTIC Fluid Tech

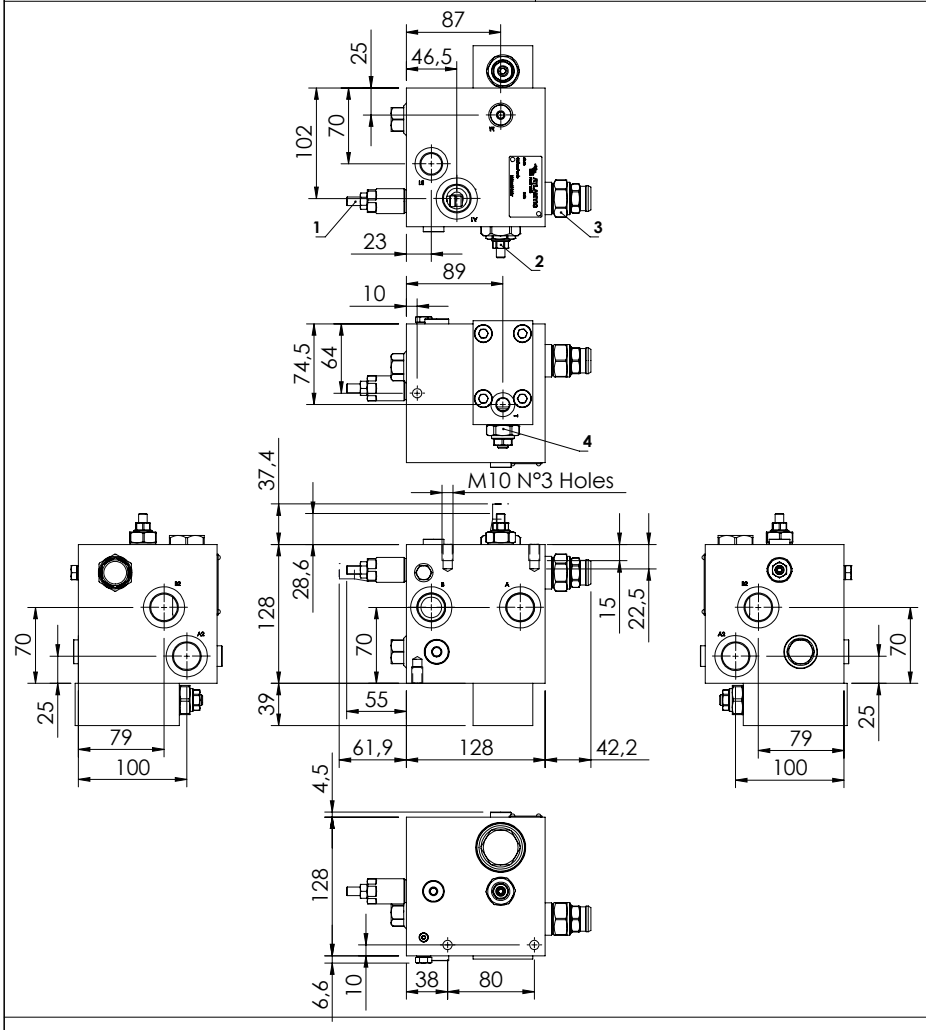

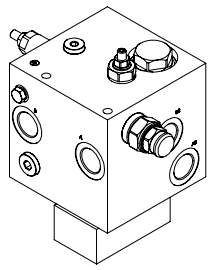

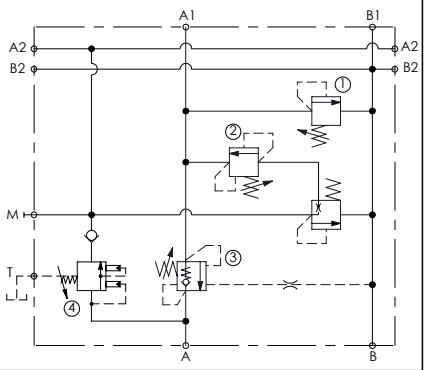

SPECIFICATIONS

Max. operating pressure:	**350 bar**
Rated flow:	**150 l/min**
Manifold:	**Aluminium**
Weight:	**3,2 kg**

SEALING CAP

Ordering code:

AT000020
Relief valve

ST000012
Counterbalance valve

ORDERING CODES

Quick code	Description	Main ports size	Standard setting (bar, Q=5 l/min)	Adjustment range (bar)	Pressure increase (bar/turn)
BD000131	**BNND-150-NLBCU-08-G34-N350**	A,A1,A2,B,B2: **G3/4"** B1: **G1/2"** M,T: **G1/4"**	① **280** ③ **230** ② **50** ④ **175**	① **100-350** ③ **60-210** ② **90-210** ④ **140-350**	① **91** ③ **50** ② **87** ④ **70,5**

APPLICATIONS - HOOK LOADERS

ATLANTIC Fluid Tech

Hydraulic scheme	Valve description	Valve type	Rated flow (l/min)	Max. pressure (bar)	Installation	Main port size or cavity type	Page
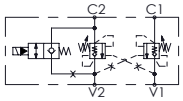	MBDN-150-ZABE	Double acting with electric by-pass	150	350	In line	G 3/4"	20.06.**010**
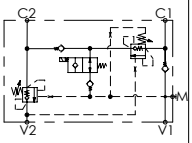	MBPN-150-ZLNR	Regenerative with electric by-pass	150	350	In line	G 3/4"	20.06.**020**
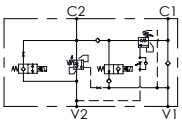	MRSN-150-ALBE	Regenerative with electric by-pass	150	350	In line	G 3/4"	20.06.**030**
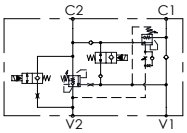	MRLN-150-ZABE	Regenerative with electric by-pass	150	350	In line	G 3/4"	20.06.**040**

HOOK LOADERS

MBDN-150-ZABE

DOUBLE ACTING WITH ELECTRIC BY-PASS

ATLANTIC Fluid Tech

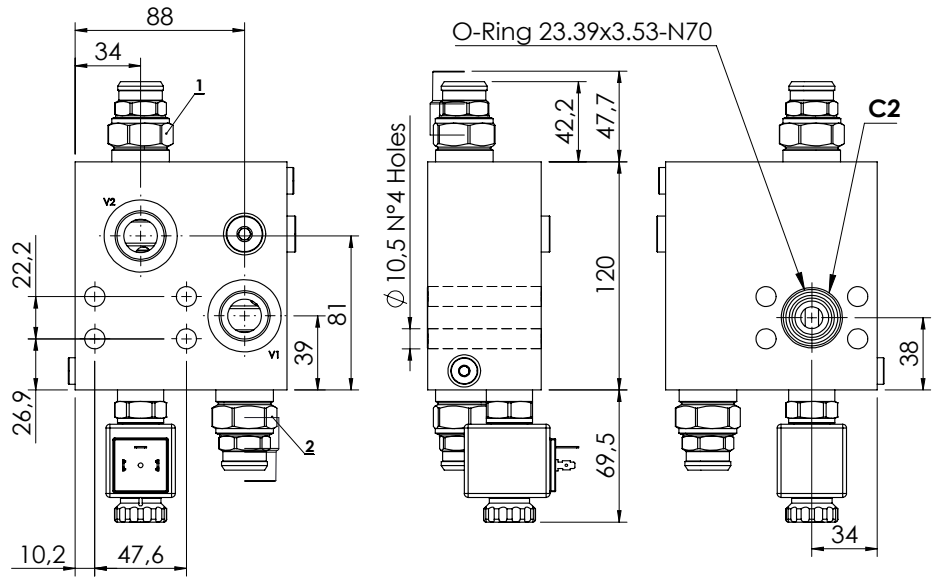

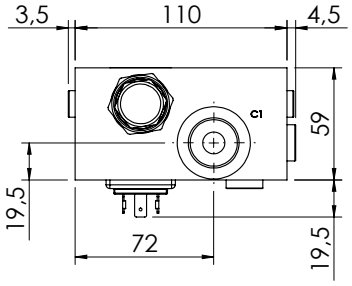

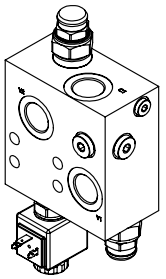

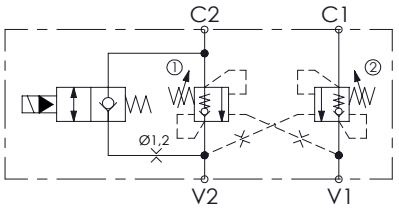

SPECIFICATIONS

Max. operating pressure:	350 bar
Rated flow:	150 l/min
Manifold:	Steel
Weight:	2,75 kg
Coil:	M7 Type
Voltage - Class:	26V - H
Connector:	DIN 43650

SEALING CAP

Ordering code:

ST000012

NOTES

Setting: at least 1.3 times the load induced pressure

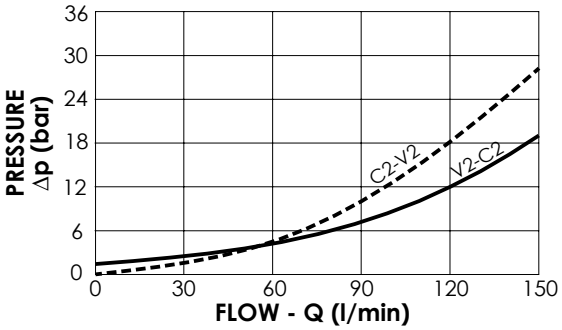

ORDERING CODES

Quick code	Description	Pilot ratio	Main ports size	Standard setting (bar, Q=5 l/min)	Adjust. range (bar)	Pressure increase (bar/turn)
MB000915	**MBDN-150-ZABE-04-G34-N350**	**4:1**	V1,V2,C1: **G3/4"** C2: **3/4 SAE 3000**	**350**	**100-350**	**104**

HOOK LOADERS

MBPN-150-ZLNR

REGENERATIVE WITH ELECTRIC BY-PASS

ATLANTIC Fluid Tech

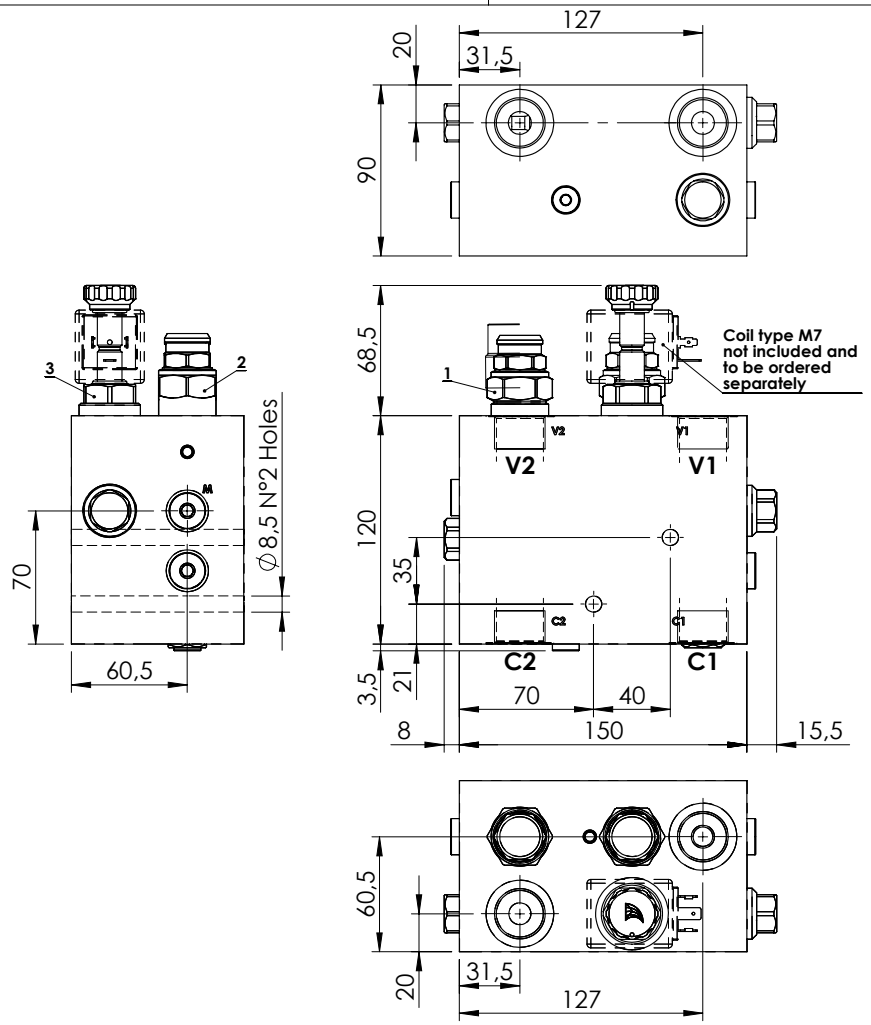

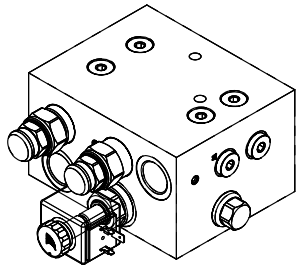

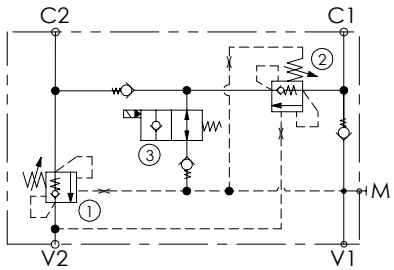

SPECIFICATIONS

Max. operating pressure:	350 bar
Rated flow:	150 l/min
Manifold:	Aluminium
Weight:	4,92 kg
Coil type:	M7

SEALING CAP

Ordering code:
ST000012

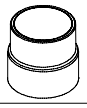

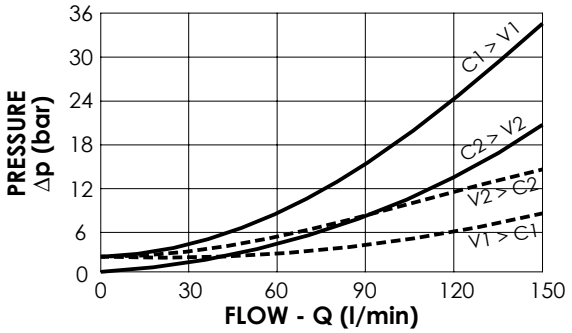

NOTES

Setting: at least 1.3 times the load induced pressure

ORDERING CODES

Quick code	Description	Pilot ratio	Main ports size	Standard setting (bar, Q=5 l/min)	Adjust. range (bar)	Pressure increase (bar/turn)
MB000919	**MBPN-150-ZLNR-04-G34-N210**	**4:1**	C1,C2,V1,V2: **G3/4"** M: **G1/4"**	**350**	**100-350**	**104**

HOOK LOADERS

MRSN-150-ALBE

REGENERATIVE WITH ELECTRIC BY-PASS

ATLANTIC Fluid Tech

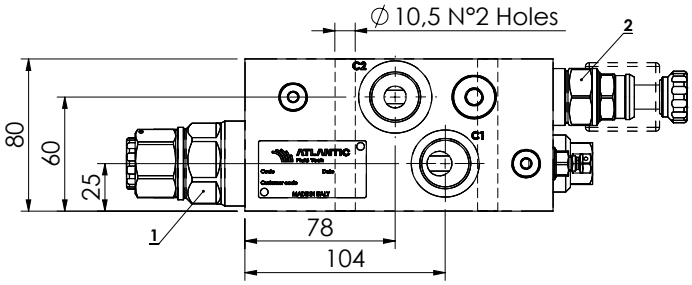

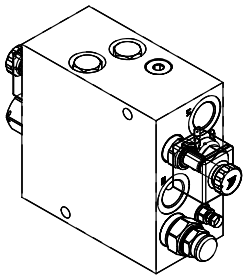

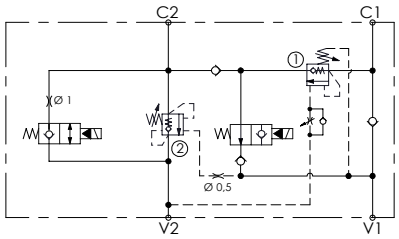

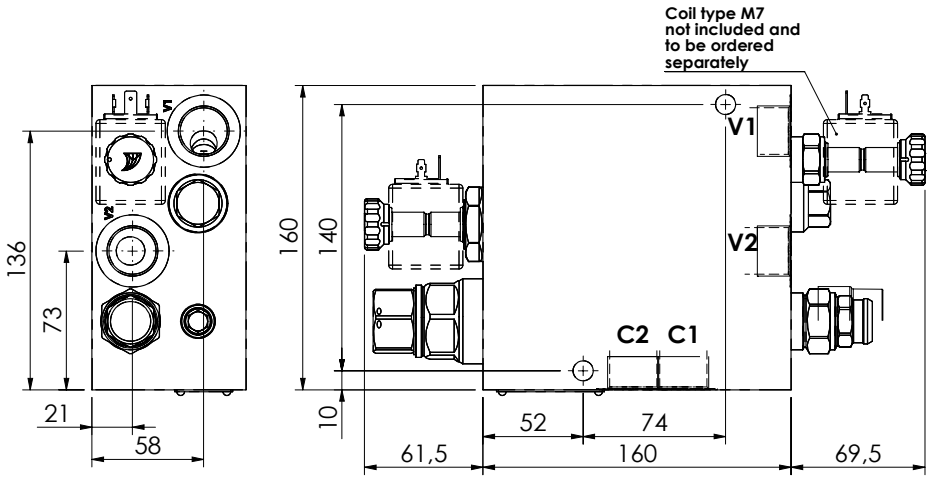

SPECIFICATIONS

Max. operating pressure:	350 bar
Rated flow:	150 l/min
Manifold:	Steel
Weight:	14,95 kg
Coil type:	M7

SEALING CAP

Ordering code:

ST000012

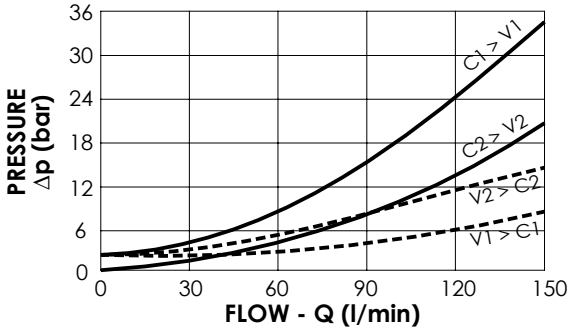

NOTES

Setting: at least 1.3 times the load induced pressure

ORDERING CODES

Quick code	Description	Pilot ratio	Main ports size	Standard setting (bar, Q=5 l/min)	Adjust. range (bar)	Pressure increase (bar/turn)
MB000920	**MRSN-150-ALBE-04-G34-N350**	**4:1**	V1, V2: **G3/4"** C1, C2: **G3/4"**	**350**	**100-350**	**104**

HOOK LOADERS

MRLN-150-ZABE

REGENERATIVE WITH ELECTRIC BY-PASS

ATLANTIC Fluid Tech

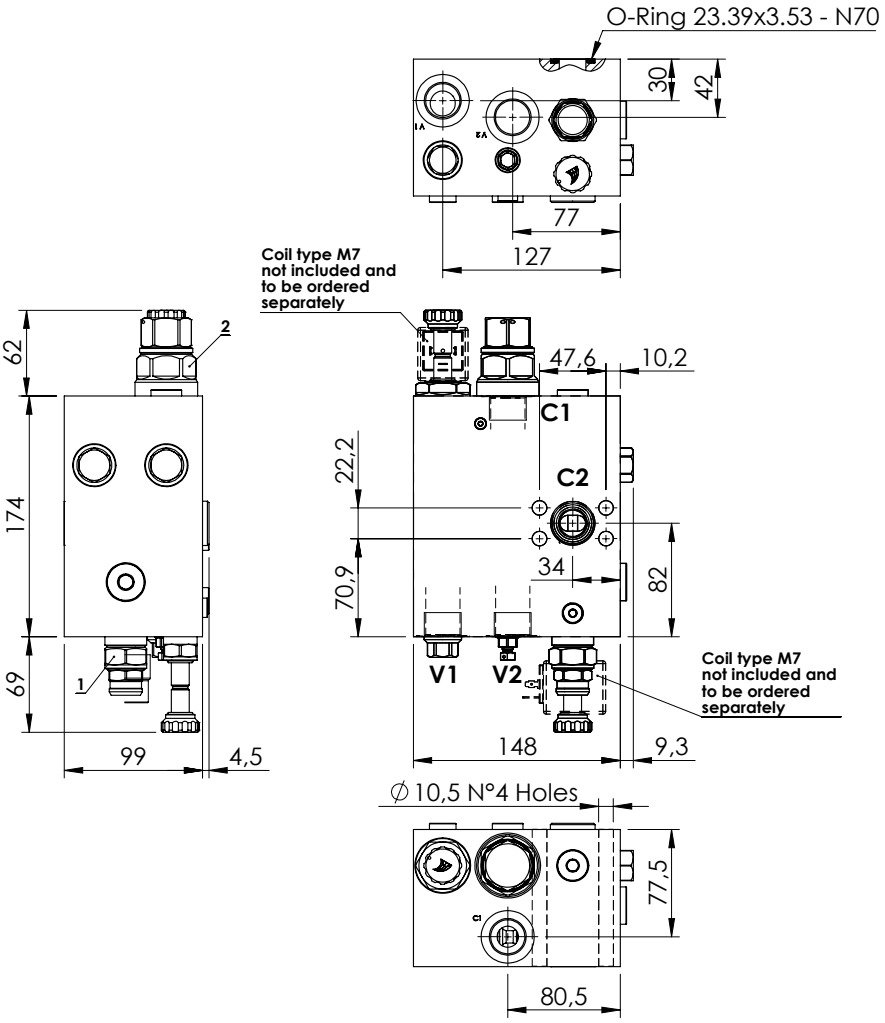

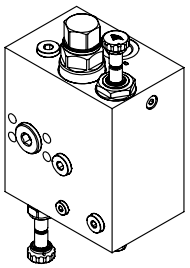

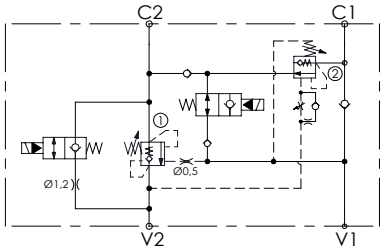

SPECIFICATIONS

Max. operating pressure:	350 bar
Rated flow:	150 l/min
Manifold:	Aluminium
Weight:	7,59 kg
Coil type:	M7

SEALING CAP

Ordering code:

ST000012

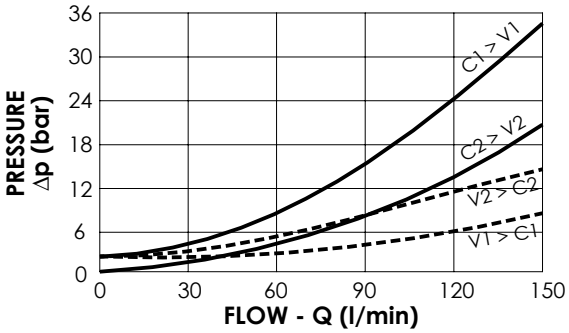

NOTES

Setting: at least 1.3 times the load induced pressure

ORDERING CODES

Quick code	Description	Pilot ratio	Main ports size	Standard setting (bar, Q=5 l/min)	Adjust. range (bar)	Pressure increase (bar/turn)
MB000119	**MRLN-150-ZABE-04-G34-N350**	**4:1**	V2,C2,C1: **G3/4"** C2: **Ø22**	**350**	**100-350**	**104**

ATLANTIC
Fluid Tech

SECTION 21

Coils and Connectors

MANAGEMENT SYSTEM CERTIFICATION
DNV·GL
ISO 9001 = ISO 14001
OHSAS 18001

COILS AND CONNECTORS

ATLANTIC Fluid Tech

Description	Type	Heat insulation class	Connector	Page
Coil M7 HS	M7 - For solenoid operated cartridge valve	H - 180°C	EN 175301-803 - DIN 43650 - ISO 4400	21.00.**010**
Coil M7 HS	M7 - For solenoid operated cartridge valve - RAC	H - 180°C	EN 175301-803 - DIN 43650 - ISO 4400	21.00.**020**
Coil M7 AJ	M7 - For solenoid operated cartridge valve	H - 180°C	Amp Junior	21.00.**030**
Coil M7 DT	M7 - For solenoid operated cartridge valve	H - 180°C	Deutsch - DT04-2P-L	21.00.**040**
Coil M7 DT	M7 - For solenoid operated cartridge valve	H - 180°C	Deutsch - DT04-2P-V	21.00.**050**
Coil M14 HS	M14 - For solenoid operated cartridge valve	H - 180°C	EN 175301-803 - DIN 43650 - ISO 4400	21.00.**060**
Coil M14 DT	M14 - For solenoid operated cartridge valve	H - 180°C	Deutsch - DT04-2P-V	21.00.**070**
Coil M15 HS	M15 - For proportional solenoid operated cartridge valve	H - 180°C	EN 175301-803 - DIN 43650 - ISO 4400	21.00.**080**
Coil M8 HS	M8 - For Ø19 tube diverter valve	H - 180°C	EN 175301-803 - DIN 43650 - ISO 4400	21.00.**090**
Coil M11 HS	M11 - For Ø22 tube diverter valve	H - 180°C	EN 175301-803 - DIN 43650 - ISO 4400	21.00.**100**
DIN Connector	IP67 - Standard / with VDR / with rectifier	-	EN 175301-803 - DIN 43650 - ISO 4400	21.00.**110**

COIL

COIL SERIES M7

DIN 43650 - ISO 4400
CLASS H

ATLANTIC Fluid Tech

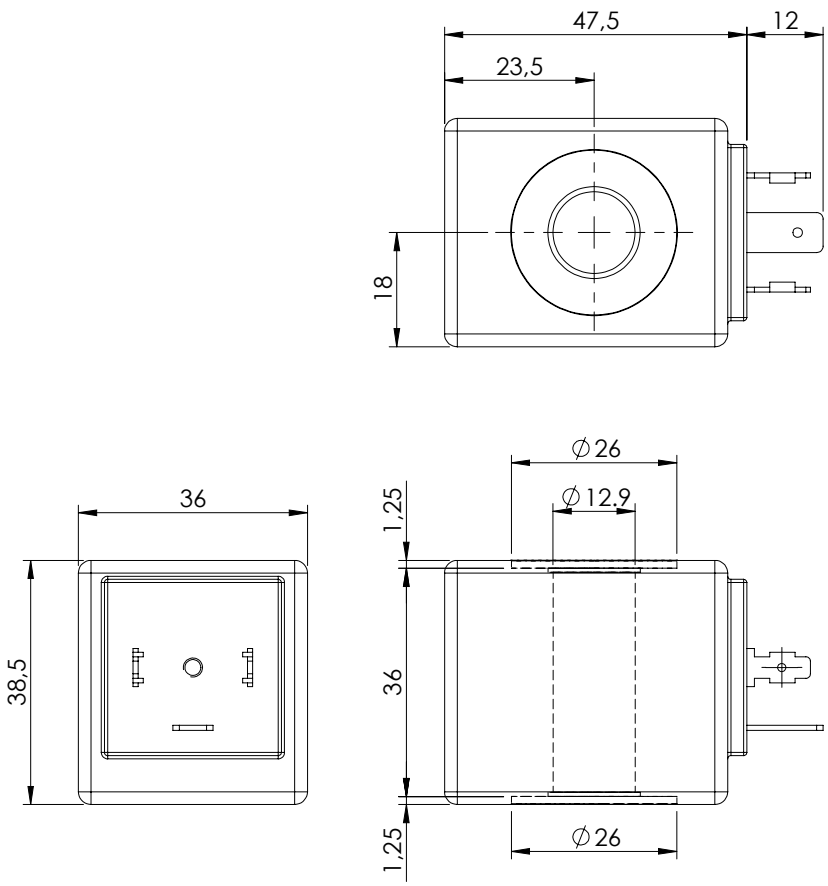

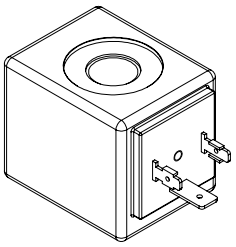

SPECIFICATIONS

Heat insulation:	Class H (180°C)
Ambient temperature:	See graph
Inlet voltage:	See graph
Insulation class:	IP65 with all seals properly mounted
Weight:	0,217 kg

NOTES

ED 100% in the functional range area.

Do not exceed the functional range.

For applications with working range close to graph limit please contact AFT sales network.

The seals supplied with the valve must be properly mounted.

Please refer to catalogue technical chapter for more info.

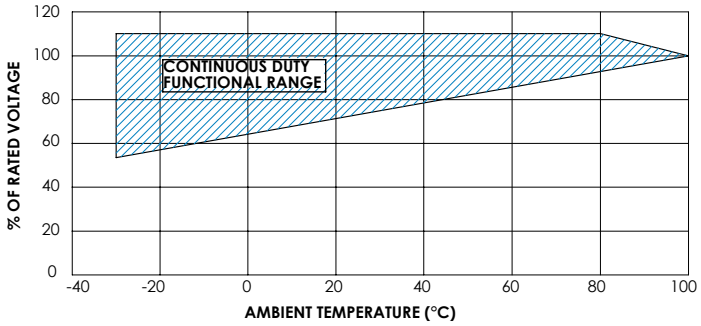

ORDERING CODES

Quick code	Description	Connection type	Voltage (V)	*Resistance (Ω) ±7%*	*Power (w)*	*Current (A)*
AB000002	Coil M7 HS 12V CLASS H	DIN 43650-ISO 4400	12 DC	7,2	20	1,67
AB000018	Coil M7 HS 14V CLASS H	DIN 43650-ISO 4400	14 DC	9,8	20	1,43
AB000003	Coil M7 HS 24V CLASS H	DIN 43650-ISO 4400	24 DC	28,8	20	0,83
AB000004	Coil M7 HS 26V CLASS H	DIN 43650-ISO 4400	26 DC	33,8	20	0,77
AB000043	Coil M7 HS 10.5V CLASS H	DIN 43650-ISO 4400	10.5 DC	5,5	20	1,90
AB000046	Coil M7 HS 48V CLASS H	DIN 43650-ISO 4400	48 DC	115,2	20	0,42

COIL

COIL SERIES M7

DIN 43650 - ISO 4400
RAC CLASS H

ATLANTIC Fluid Tech

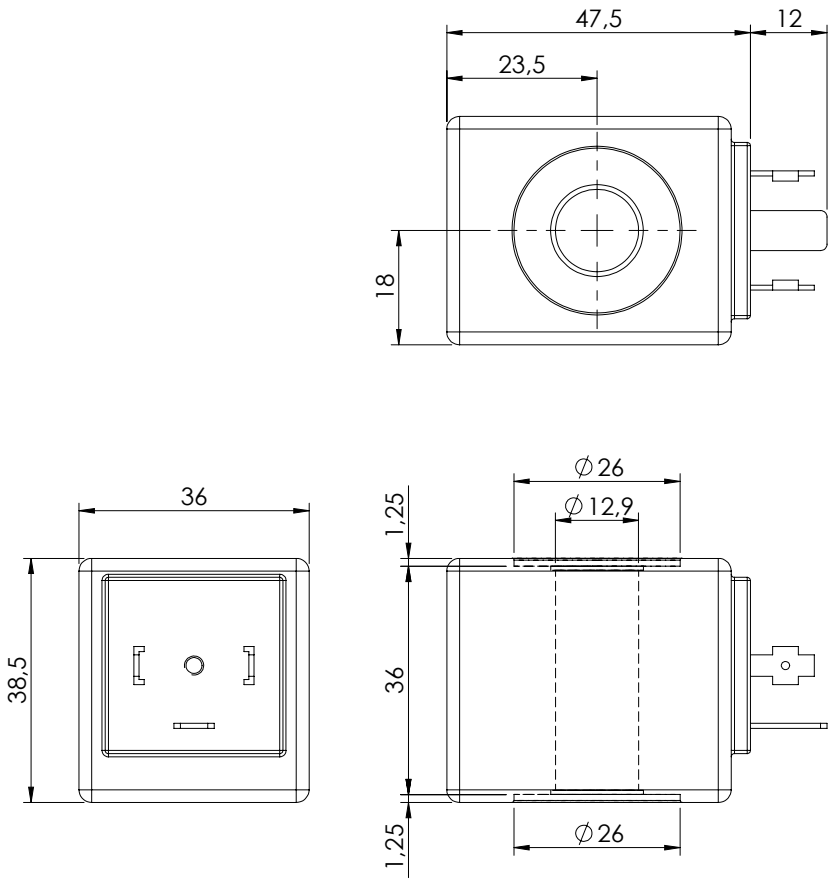

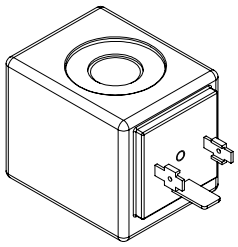

SPECIFICATIONS

Heat insulation class H	180°C
Ambient temperature	-30 + 60°C
Inlet voltage	±10% tol.
Insulation class IP69K with all seals properly mounted	
Weight:	0,18 kg

ED 100% in the functional range area.

Do not exceed the functional range.

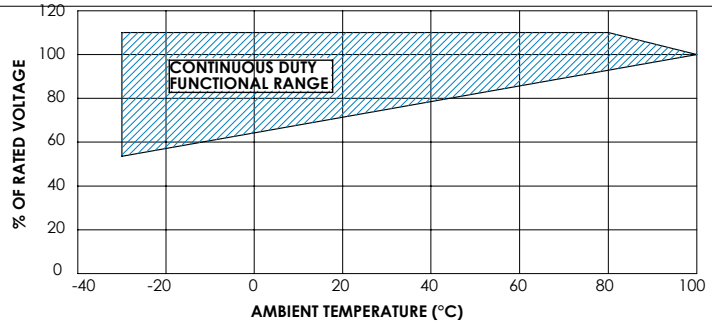

NOTES

For applications with working range close to graph limit please contact AFT sales network.

The seals supplied with the valve must be properly mounted.

Please refer to catalogue technical chapter for more info.

ORDERING CODES

Quick code	Description	Connector type	Voltage (V)	Resistance (Ω) ±7%	Power (w)	Current (A)
AB000011	Coil M7 HS 12V CLASS H	DIN 43650-ISO 4400	24 RAC	23,1	20	0,9
AB000012	Coil M7 HS 110V RAC Class H	DIN 43650-ISO 4400	110 RAC	605	20	0,18
AB000007	Coil M7 HS 220V RAC Class H	DIN 43650-ISO 4400	220 RAC	2140	20	0,09

COIL

COIL SERIES M7

AMP JUNIOR
CLASS H

ATLANTIC Fluid Tech

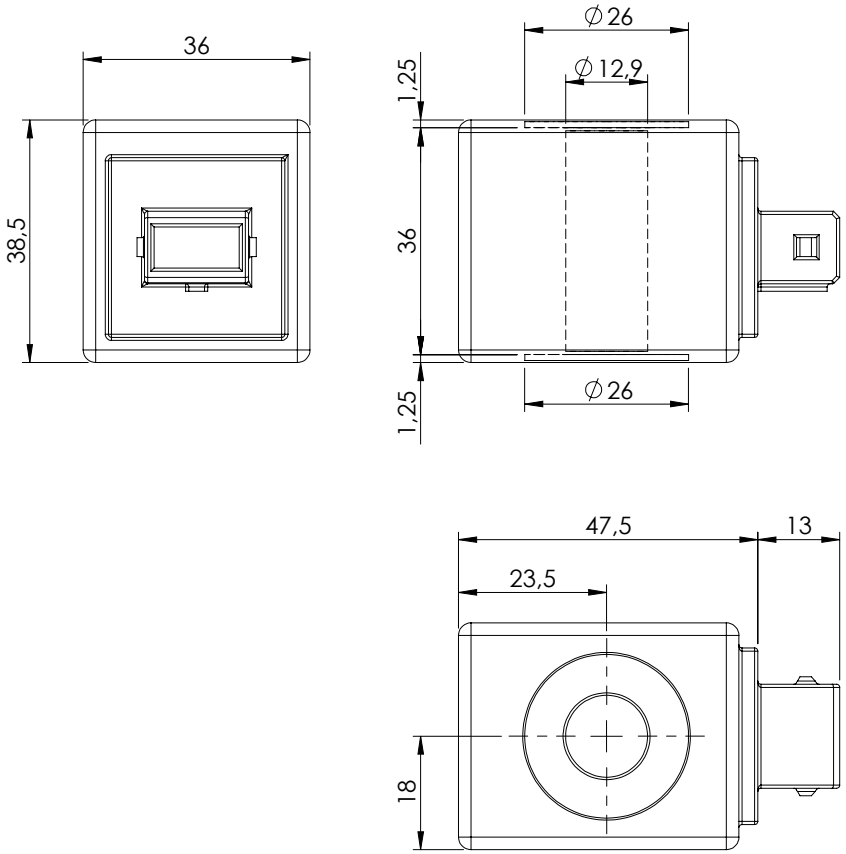

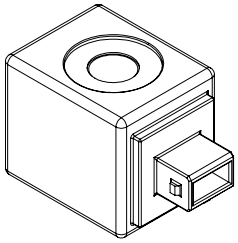

SPECIFICATIONS

Heat insulation class H	180°C
Ambient temperature	-30 + 60°C
Inlet voltage	±10% tol.
Insulation class IP69K with all seals properly mounted	
Weight:	0,18 kg

NOTES

ED 100% in the functional range area.

Do not exceed the functional range.

For applications with working range close to graph limit please contact AFT sales network.

The seals supplied with the valve must be properly mounted.

Please refer to catalogue technical chapter for more info.

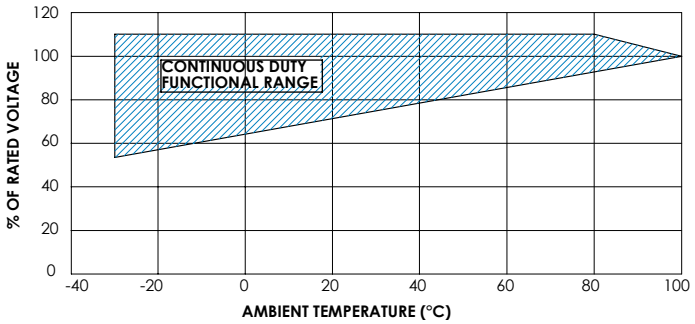

ORDERING CODES

Quick code	Description	Connector type	Voltage (V)	Resistance (Ω) ±7%	Power (w)	Current (A)
AB000005	Coil M7 AJ 12V CLASS H	AMP JUNIOR	12 DC	7,2	20	1,67
AB000014	Coil M7 AJ 24V CLASS H	AMP JUNIOR	24 DC	28,8	20	0,83
AB000010	Coil M7 AJ 26V CLASS H	AMP JUNIOR	26 DC	33,8	20	0,77

COIL

COIL SERIES M7

DEUTSCH DT04-2P-L
CLASS H

ATLANTIC Fluid Tech

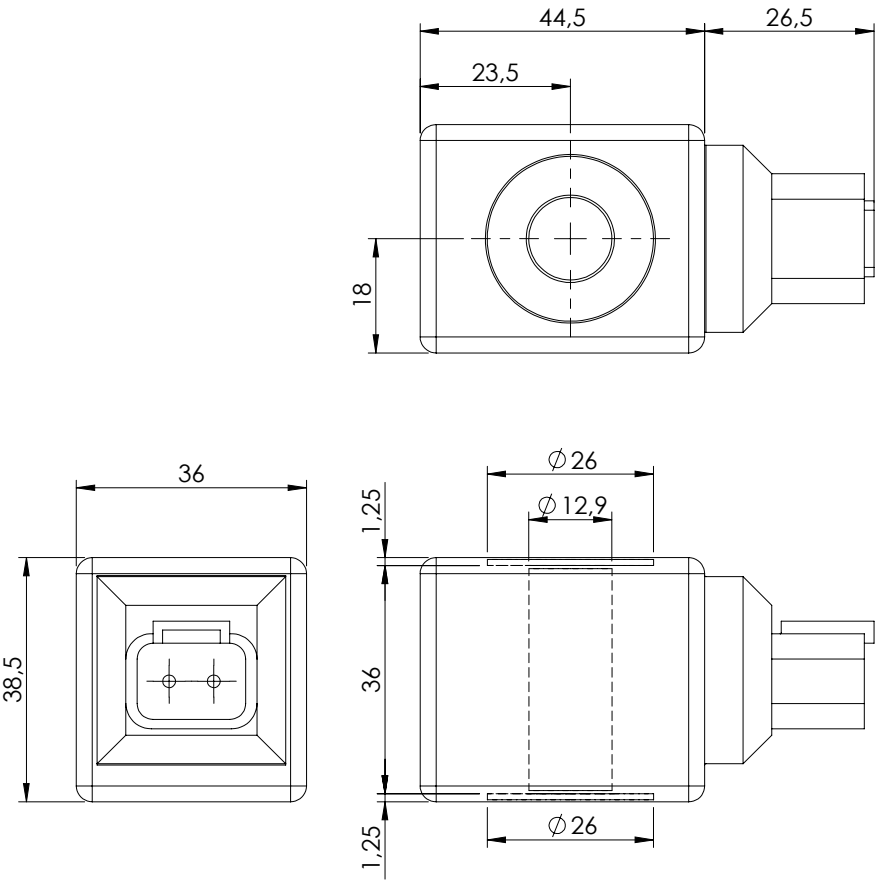

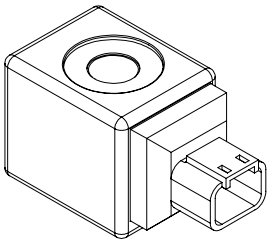

SPECIFICATIONS

Heat insulation class H	180°C
Ambient temperature	-30 + 60°C
Inlet voltage	±10% tol.
Insulation class IP69K with all seals properly mounted	
Weight:	0,18 kg

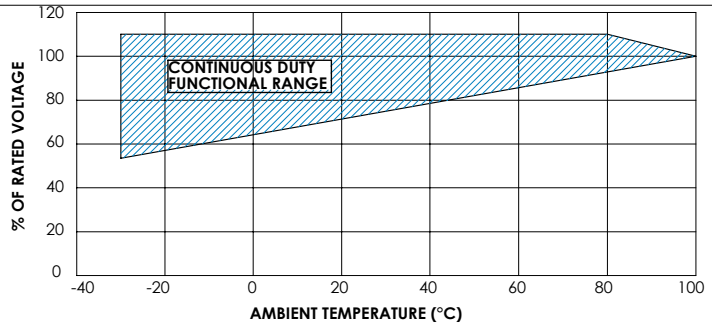

NOTES

Equipped with bi-directional diode.

ED 100% in the functional range area.

Do not exceed the functional range.

For applications with working range close to graph limit please contact AFT sales network.

The seals supplied with the valve must be properly mounted.

Please refer to catalogue technical chapter for more info.

ORDERING CODES

Quick code	Description	Connector type	Voltage (V)	Resistance (Ω) ±7%	Power (w)	Current (A)
AB000001	Coil M7 DT 12V CLASS H	DT04-2P-L	12 DC	7,2	20	1,67
AB000008	Coil M7 DT 24V CLASS H	DT04-2P-L	24 DC	28,8	20	0,83

COIL

COIL SERIES M7

DEUTSCH DT04-2P-V
CLASS H

ATLANTIC Fluid Tech

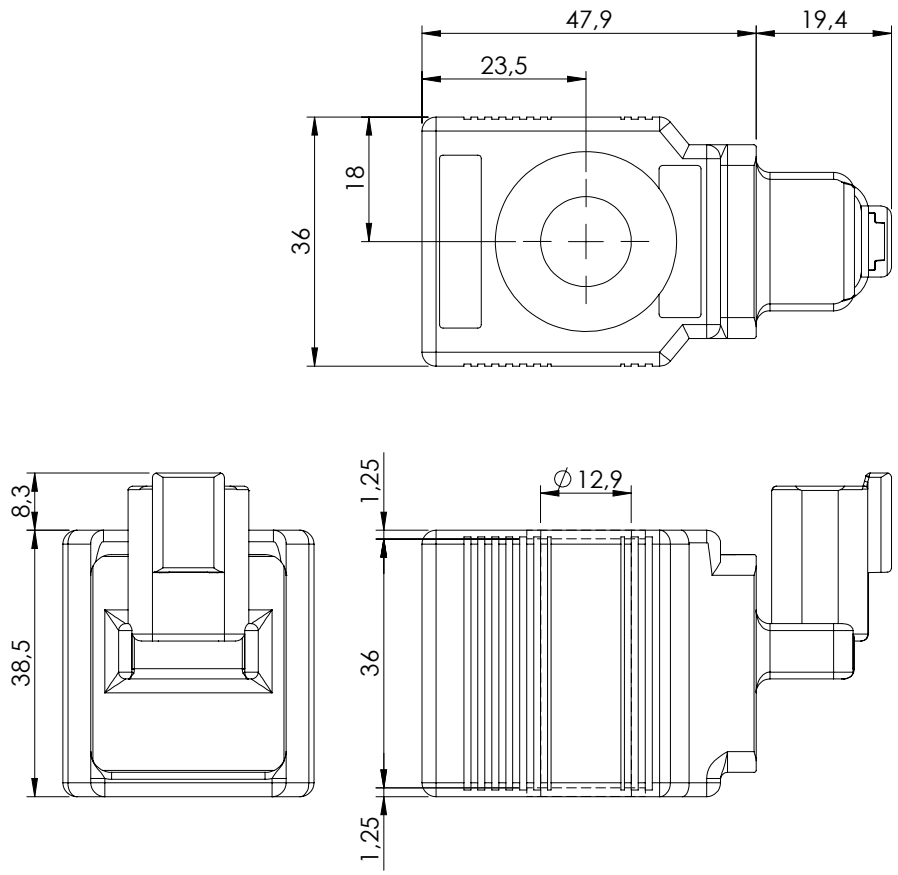

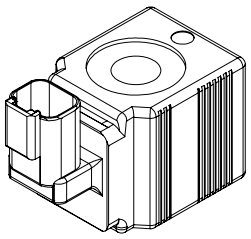

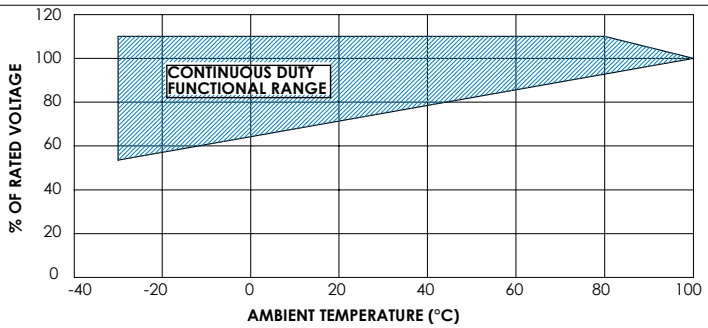

SPECIFICATIONS

Heat insulation class H	180°C
Ambient temperature	-30 + 60°C
Inlet voltage	±10% tol.
Insulation class IP69K with all seals properly mounted	
Weight:	0,18 kg

NOTES

Equipped with bi-directional diode.

ED 100% in the functional range area.

Do not exceed the functional range.

For applications with working range close to graph limit please contact AFT sales network.

The seals supplied with the valve must be properly mounted.

Please refer to catalogue technical chapter for more info.

ORDERING CODES

Quick code	Description	Connector type	Voltage (V)	Resistance (Ω) ±7%	Power (w)	Current (A)
AB000022	Coil M7 DTV 12V CLASS H	DT04-2P-V	12 DC	7,2	20	1,67
AB000229	Coil M7 DTV 14V CLASS H	DT04-2P-V	14 DC	9,8	20	1,43
AB000023	Coil M7 DTV 24V CLASS H	DT04-2P-V	24 DC	28,8	20	0,83
AB000024	Coil M7 DTV 26V CLASS H	DT04-2P-V	26 DC	33,8	20	0,77
AB000230	Coil M7 DTV 28V CLASS H	DT04-2P-V	28 DC	39,4	20	0,71

COIL

COIL SERIES M14

DIN 43650 - ISO 4400
CLASS H

ATLANTIC Fluid Tech

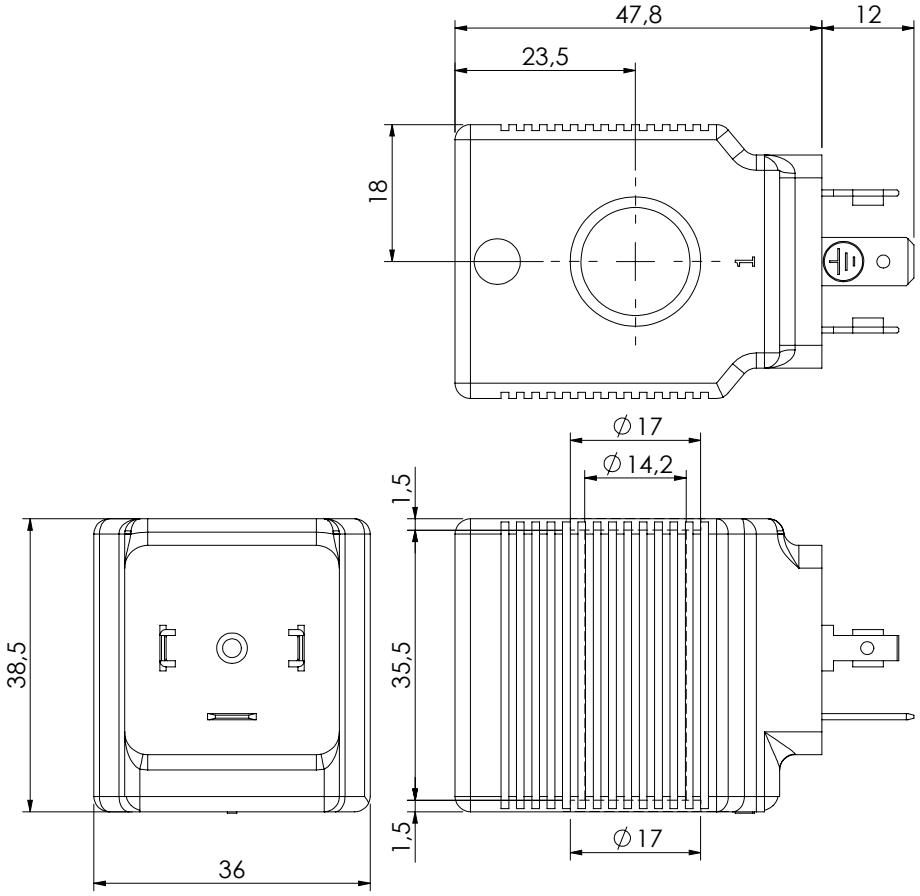

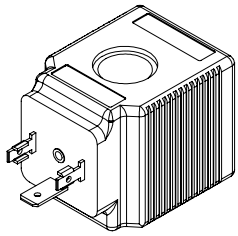

SPECIFICATIONS

Heat insulation class H	180°C
Ambient temperature	-30 + 60°C
Inlet voltage	±10% tol.
Insulation class IP69K with all seals properly mounted	
Weight:	0,18 kg

NOTES

ORDERING CODES

Quick code	Description	Connector type	Voltage (V)	Resistance (Ω) ±7%	Power (w)	Current (A)
AB000143	Coil M14 HS 12V CLASS H	DIN 43650-ISO 4400	12 DC	5,53	26	2,17
AB000145	Coil M14 HS 13V CLASS H	DIN 43650-ISO 4400	13 DC	6,5	26	2,00
AB000144	Coil M14 HS 24V CLASS H	DIN 43650-ISO 4400	24 DC	22,15	26	1,08

COIL

COIL SERIES M14

DEUTSCH DT04-2P-V
CLASS H

ATLANTIC Fluid Tech

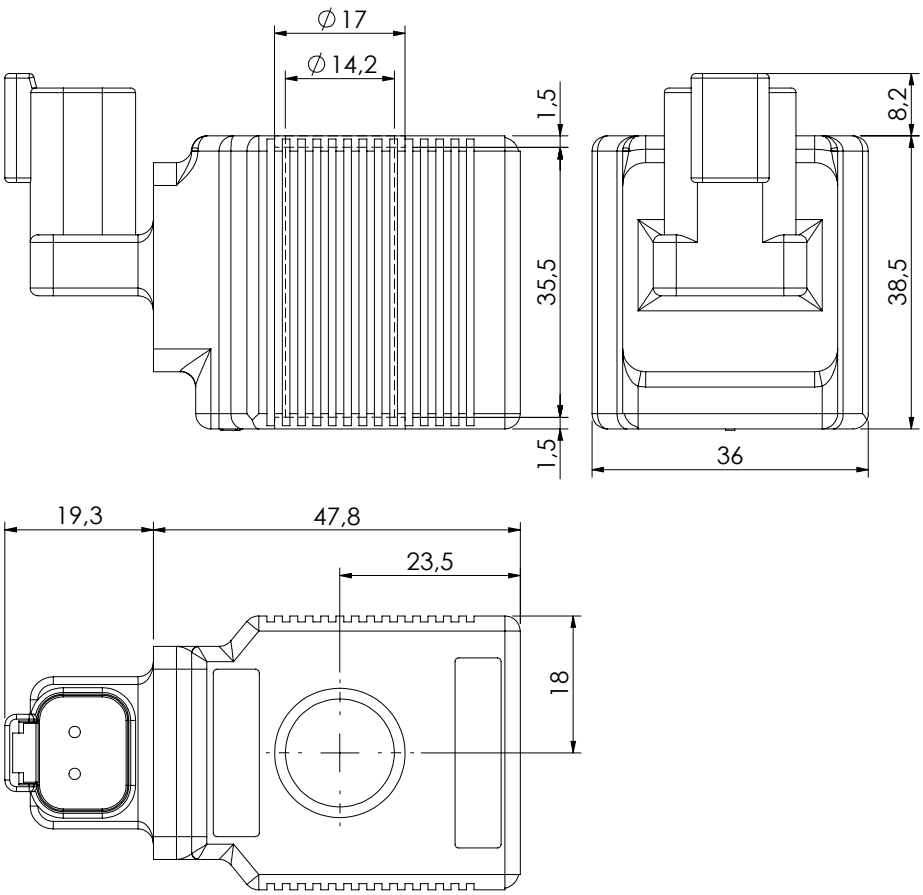

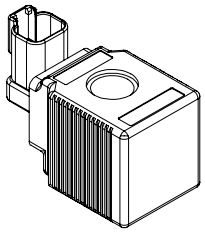

SPECIFICATIONS

Heat insulation class H	180°C
Ambient temperature	-30 + 60°C
Inlet voltage	±10% tol.
Insulation class IP69K with all seals properly mounted	
Weight:	0,18 kg

NOTES

With bi-directional diode

ORDERING CODES

Quick code	Description	Connector type	Voltage (V)	Resistance (Ω) ±7%	Power (w)	Current (A)
AB000132	Coil M14 DTV 12V CLASS H	DT04-2P-V	12 DC	5,53	26	2,17
AB000133	Coil M14 DTV 24V CLASS H	DT04-2P-V	24 DC	22,15	26	1,08
AB000211	Coil M14 DTV 26V CLASS H	DT04-2P-V	26 DC	26	26	1

COIL

COIL SERIES M15

DIN 43650 - ISO 4400
CLASS H

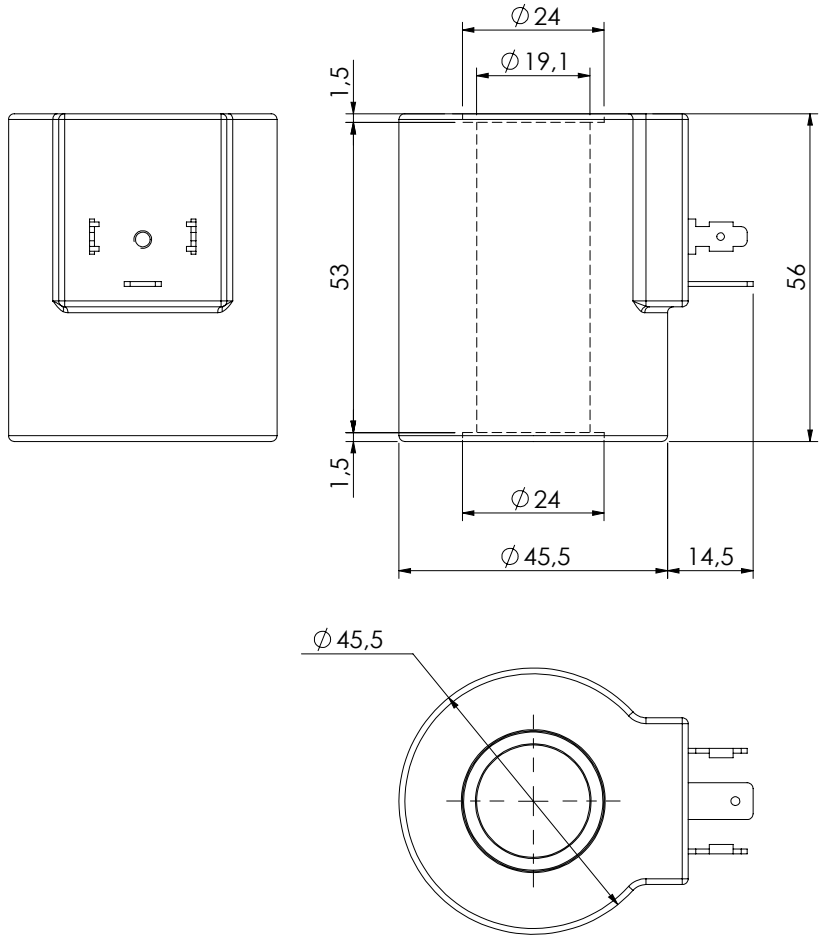

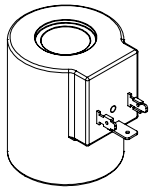

SPECIFICATIONS

Heat insulation class H	180°C
Ambient temperature	-30 + 60°C
Inlet voltage	±10% tol.
Insulation class IP69K with all seals properly mounted	
Weight:	0,18 kg

NOTES

ORDERING CODES

Quick code	Description	Connector type	Voltage (V)	Resistance (Ω) ±7%	Power (w)	Current (A)
AB000137	Coil M15 HS 12V CLASS H	DIN 43650-ISO 4400	12 DC	6.26	23	1.92
AB000138	Coil M15 HS 24V CLASS H	DIN 43650-ISO 4400	24 DC	25.05	23	0.96

COIL

COIL SERIES M8

DIN 43650 - ISO 4400
CLASS H

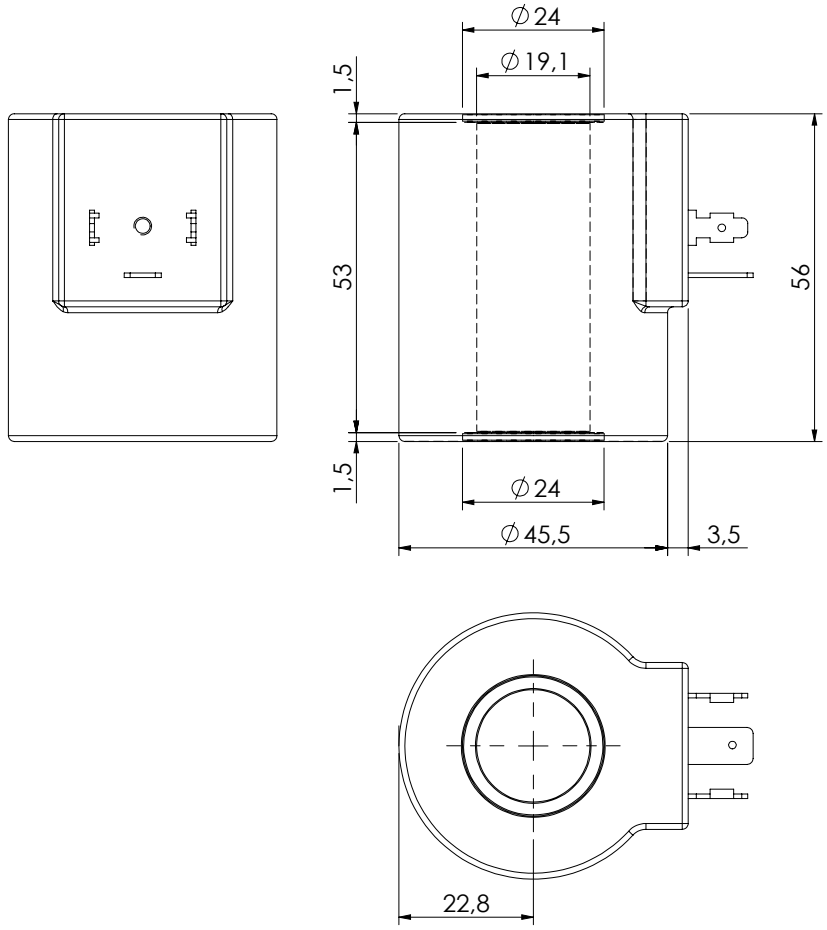

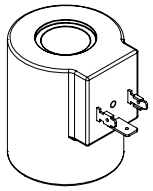

SPECIFICATIONS

Heat insulation class H	180°C
Ambient temperature	-30 + 60°C
Inlet voltage	±10% tol.
Insulation class IP69K with all seals properly mounted	
Weight:	0,18 kg

NOTES

ORDERING CODES

Quick code	Description	Connector type	Voltage (V)	Resistance (Ω) ±7%	Power (w)	Current (A)
AB000015	Coil M8 HS 12V CLASS H	DIN 43650-ISO 4400	12 DC	4.4	33 W	2.75
AB000029	Coil M8 HS 24V CLASS H	DIN 43650-ISO 4400	24 DC	17.5	33 W	1.38
AB000159	Coil M8 HS 14V CLASS H	DIN 43650-ISO 4400	14 DC	5.94	33 W	2.36
AB000160	Coil M8 HS 26V CLASS H	DIN 43650-ISO 4400	26 DC	20.48	33 W	1.27
AB000158	Coil M8 HS 48V CLASS H	DIN 43650-ISO 4400	48 DC	69.81	33 W	0.69

COIL

COIL SERIES M11

DIN 43650 - ISO 4400
CLASS H

ATLANTIC Fluid Tech

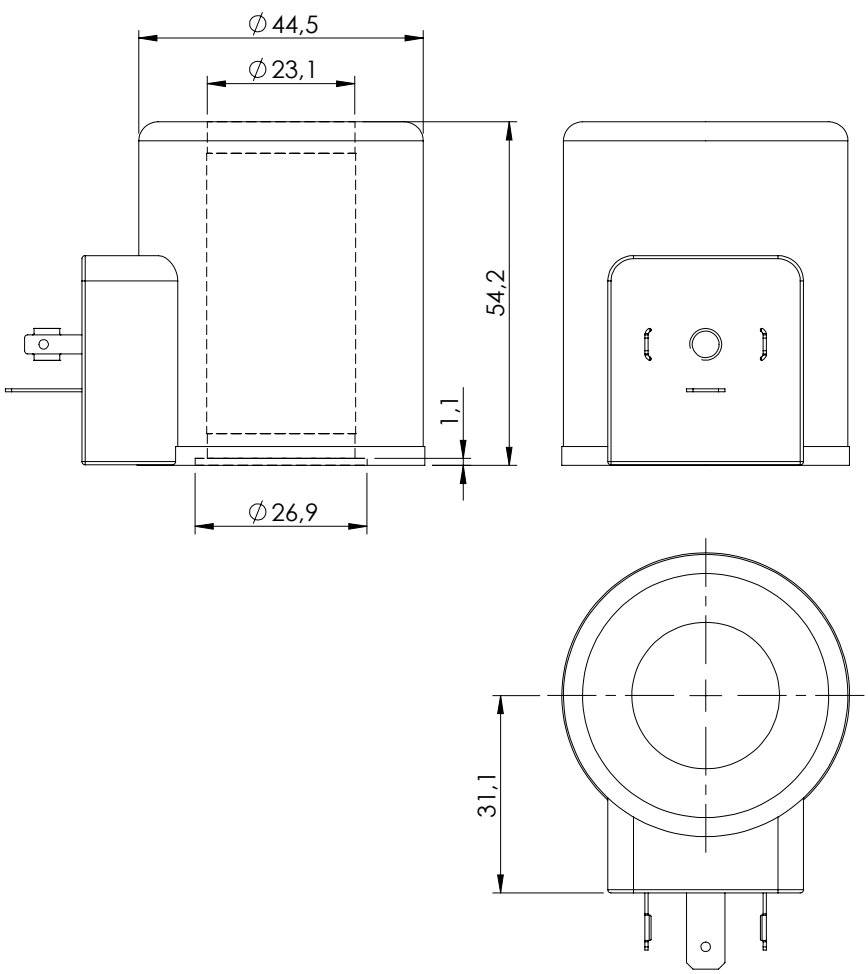

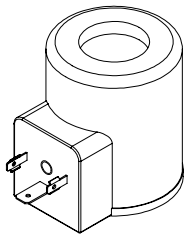

SPECIFICATIONS

Heat insulation class H	180°C
Ambient temperature	-30 + 60°C
Inlet voltage	±10% tol.
Insulation class IP69K with all seals properly mounted	
Weight:	0,18 kg

NOTES

ORDERING CODES

Quick code	Description	Connector type	Voltage (V)	Resistance (Ω) ±7%	Power (w)	Current (A)
AB000149	Coil M11 HS 12V CLASS H	DIN 43650-ISO 4400	12 DC	3.27	44	3.67
AB000150	Coil M11 HS 24V CLASS H	DIN 43650-ISO 4400	24 DC	13.09	44	1.83

CONNECTOR

DIN CONNECTOR

ATLANTIC Fluid Tech

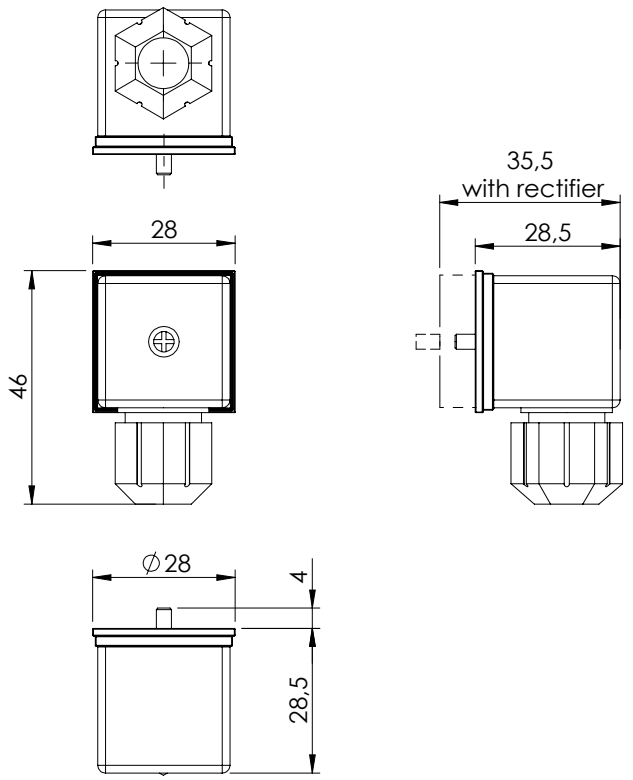

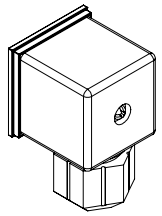

SPECIFICATIONS

Voltage rating:	AC: up to 250 V Max. DC: up to 300 V Max.
Max. Current	16.0 A
Contact resistance:	≤ 4 mΩ
Max. conductor:	1.5 mm2
Cable range	Ø4.0 to Ø9.0 mm
Protection class:	IP67 EN60529
Seal:	Nitrile rubber
Poles:	2 + ground
Connector:	EN 175301-803 (DIN 43650)

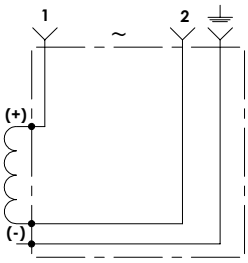

Standard circuit

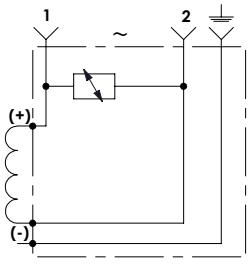

Circuit with VDR

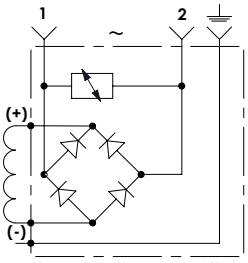

Circuit with rectifier and VDR

ORDERING CODES

Quick code	Colour	VDR	LED	Rectifier	Voltage
PV000171	Black	No	No	No	12V to 230V
PV000195	Black	Yes	No	No	12V DC
PV000349	Black	Yes	No	No	24V DC
PV000347	Black	Yes	No	Yes	12V RAC
PV000198	Transparent	Yes	Yes	No	12V DC
PV000348	Black	Yes	No	Yes	24V RAC
PV000196	Transparent	Yes	Yes	No	24V DC
PV000199	Black	Yes	No	Yes	230V RAC
PV000243	Transparent	Yes	Yes	No	230V DC

ATLANTIC
Fluid Tech

SECTION 22

Accessories and Spare

MANAGEMENT SYSTEM CERTIFICATION
DNV·GL
ISO 9001 = ISO 14001
OHSAS 18001

ACCESSORIES AND SPARE

ATLANTIC Fluid Tech

Hydraulic scheme	Valve description	Valve type	Rated flow (l/min)	Max. pressure (bar)	Installation	Main port size or cavity type	Page
	Filter G 1/4"	300 micron filtration	25	Δp 35	Insert	G1/4"	22.00.**010**
	Filter G 3/8"	300 micron filtration	50	Δp 35	Insert	G3/8"	22.00.**010**
	Filter G 1/8"	300 micron filtration	10	Δp 35	Insert	G1/8"	22.00.**010**
	Manual override	Detent type	-	-	Screw	-	22.00.**020**
	Sleeve body G 1/4"	For hose burst and check valve	-	350	In line	G1/4"	22.00.**030**
	Sleeve body G 3/8"	For hose burst and check valve	-	350	In line	G3/8"	22.00.**030**
	Sleeve body G 1/2"	For hose burst and check valve	-	350	In line	G1/2"	22.00.**030**
	Sleeve body G 3/4"	For hose burst and check valve	-	350	In line	G3/4"	22.00.**030**
	Sleeve body G 1/4"	For flow control valve	-	350	In line	G1/4"	22.00.**040**
	Sleeve body G 3/8"	For flow control valve	-	350	In line	G3/8"	22.00.**040**
	Sleeve body G 1/2"	For flow control valve	-	350	In line	G1/2"	22.00.**040**
	Sleeve body G 3/4"	For flow control valve	-	350	In line	G3/4"	22.00.**040**
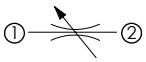	CFSN-090-PBSR-06	For flow control valve	0 - 6	350	In line	VP000132	22.00.**050**
	CFSN-090-PBSR-12	For flow control valve	0 - 12	350	In line	VP000132	22.00.**050**
	CFSN-090-PBSR-25	For flow control valve	0 - 25	350	In line	VP000132	22.00.**050**
	CFSN-090-PBSR-32	For flow control valve	0 - 32	350	In line	VP000132	22.00.**050**
	CFSN-090-PBSR-50	For flow control valve	0 - 50	350	In line	VP000132	22.00.**050**
	CFSN-090-PBSR-63	For flow control valve	0 - 63	350	In line	VP000132	22.00.**050**
	CFSN-090-PBSR-70	For flow control valve	0 - 70	350	In line	VP000132	22.00.**050**
	CFSN-090-PBSR-80	For flow control valve	0 - 80	350	In line	VP000132	22.00.**050**
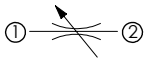	CFSN-200-BHSR	For flow control valve	-	350	In line	VP000096 VP000152	22.00.**060**
	CFSN-200-BVSR	For flow control valve	-	350	In line	VP000096 VP000152	22.00.**060**
	CFSN-200-BMSR	For flow control valve	-	350	In line	VP000096 VP000152	22.00.**060**
	CFSN-090-BHSR	For flow control valve	-	350	In line	VP000132	22.00.**060**
	CFSN-090-BVSR	For flow control valve	-	350	In line	VP000132	22.00.**060**
	CFSN-090-BMSR	For flow control valve	-	350	In line	VP000132	22.00.**060**
	CFSN-035-BHSR	For flow control valve	-	350	In line	VP000132	22.00.**060**
	CFSN-035-BVSR	For flow control valve	-	350	In line	VP000132	22.00.**060**
	CFSN-035-BMSR	For flow control valve	-	350	In line	VP000132	22.00.**060**
	VP000057 G 3/4"	Cavity plug	-	-	In line	VP000057	22.00.**070**
	VP000013 G 1"	Cavity plug	-	-	In line	VP000013	22.00.**070**
	SAE-08-2N	Cavity plug	-	-	In line	3/4-16 UNF-2B	22.00.**080**
	SAE-10-2N	Cavity plug	-	-	In line	7/8-14 UNF-2B	22.00.**080**
	SAE-08-3N	Cavity plug	-	-	In line	3/4-16 UNF-2B	22.00.**090**
	SAE-10-3N	Cavity plug	-	-	In line	7/8-14 UNF-2B	22.00.**090**
	SAE-08-4N	Cavity plug	-	-	In line	3/4-16 UNF-2B	22.00.**100**
	SAE-10-4N	Cavity plug	-	-	In line	7/8-14 UNF-2B	22.00.**100**
	Seal kit	Cavity Personalized	-	-	-	-	22.00.**110**
		Cavity SAE	-	-	-	-	22.00.**120**

ACCESSORIES

FILTER

SCREW IN FILTER

ATLANTIC Fluid Tech

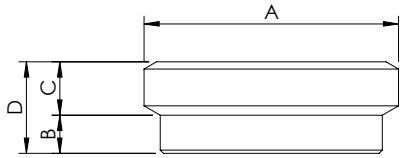

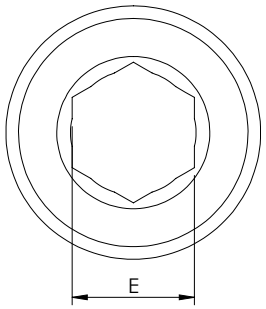

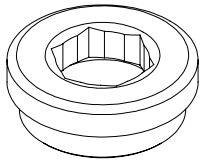

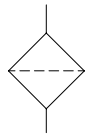

Code	A	B	C	D	E
CT000002	G 3/8"	2.5	3.5	6	8
CT000003	G 1/4"	2	3	5	6
CT000004	G 1/8"	1.6	2.2	3.8	5

SPECIFICATIONS

Max. operating Δp:	35 bar
Rated flow:	See table
Cavity:	See table
Weight:	8 g

APPLICATION LIMITATIONS

Not suitable for use with:

-fast acting valve

-cold oil

-high viscosity oil

-other conditions creating pressure drop greater than 35 bar

-max. operatig pressure is 350 bar

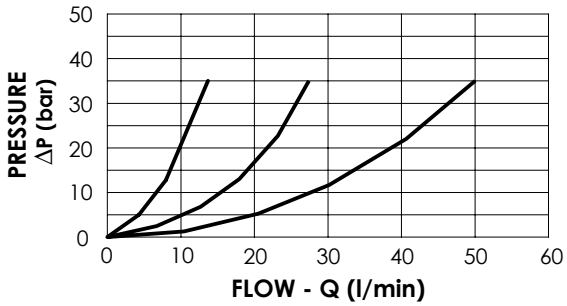

ORDERING CODES

Quick code	Description	Max. ΔP admitted (bar)	Max. flow (l/min)	Filtration (micron)	Installation torque (Nm)
CT000002	Filter G 3/8"	35	50	300	10
CT000003	Filter G 1/4"	35	25	300	5
CT000004	Filter G 1/8"	35	10	300	3

ACCESSORIES

MANUAL OVERRIDE

DETENT TYPE

ATLANTIC Fluid Tech

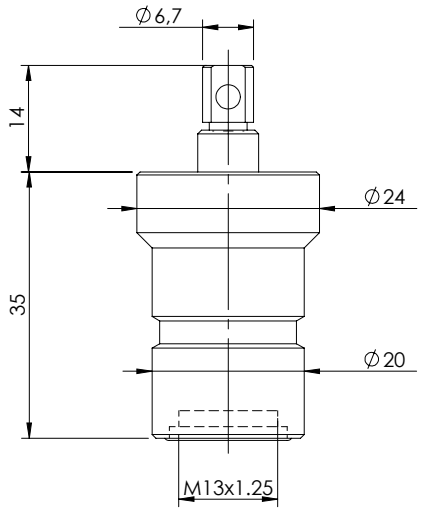

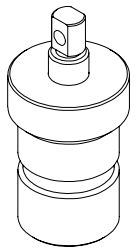

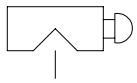

SPECIFICATIONS

Suitable for push style override solenoid valves

ORDERING CODES

Quick code	Description	
ST000364	MANUAL OVERRIDE	

SLEEVE BODY

SLEEVE

ATLANTIC Fluid Tech

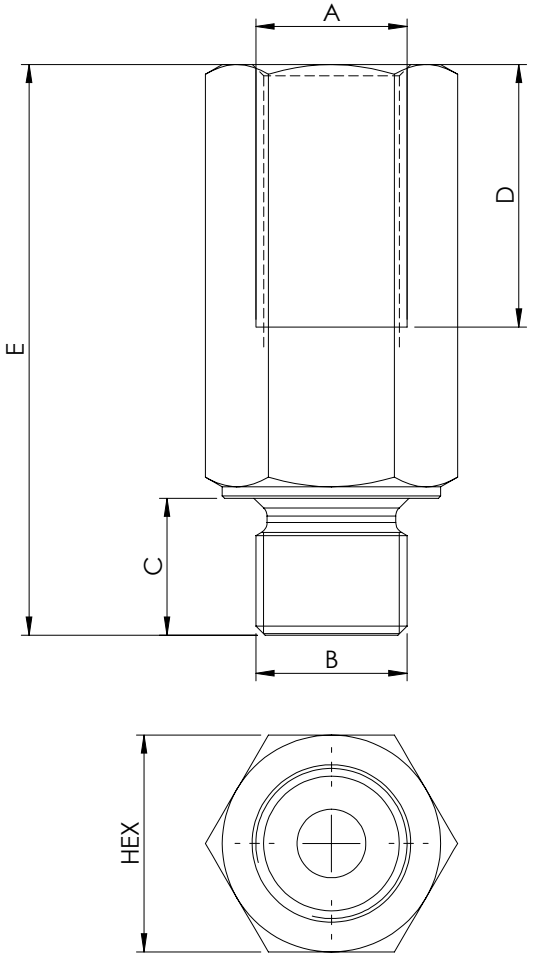

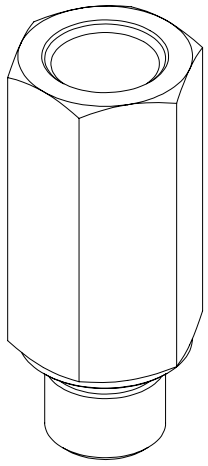

SPECIFICATIONS

Max. operating pressure:	350 bar
Material:	Zinc plated steel

NOTES

Suitable for:

-Hose burst valve
CFHN-XXX-MHST

ORDERING CODES

Quick code	A	B	C	D	E	HEX	Weight (Kg)
PC000127	G 1/4"	G 1/4"	12	23	50	19	0,07
PC000128	G 3/8"	G 3/8"	12	27	55	22	0,09
PC000129	G 1/2"	G 1/2"	14	33	63	27	0,15
PC000130	G 3/4"	G 3/4"	16	36	75	32	0,23

SLEEVE BODY

SLEEVE

ATLANTIC Fluid Tech

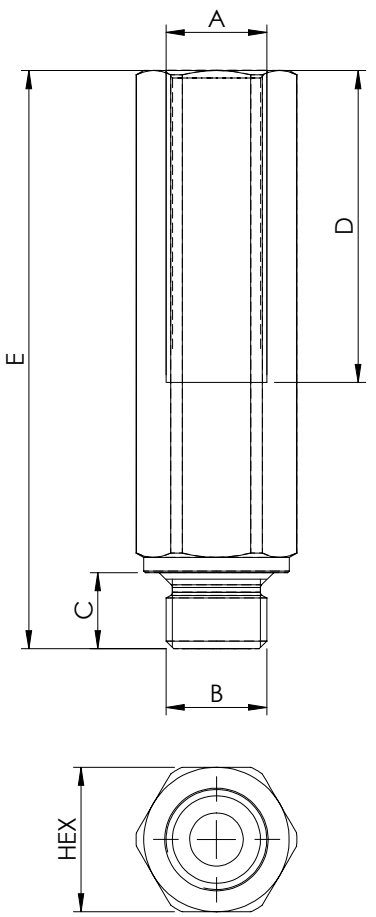

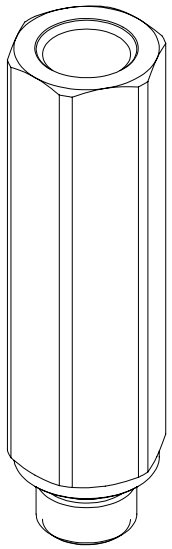

SPECIFICATIONS

Max. operating pressure:	350 bar
Material:	Zinc plated steel

NOTES

Suitable for:

-Flow control valves
CFST-XXX-MDST

ORDERING CODES

Quick code	A	B	C	D	E	HEX	Weight (Kg)
PC000196	G 1/4"	G 1/4"	10	41	76	19	0,080
PC000197	G 3/8"	G 3/8"	12	41	82	22	0,110
PC000162	G 1/2"	G 1/2"	14	45	100	27	0,165
PC000198	G 3/4"	G 3/4"	16	55	112	32	0,250

ACCESSORIES

CFSN-090-BPSR

FLOW REGULATOR SPARE PART

ATLANTIC Fluid Tech

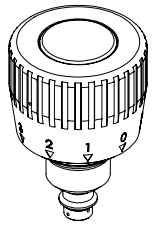

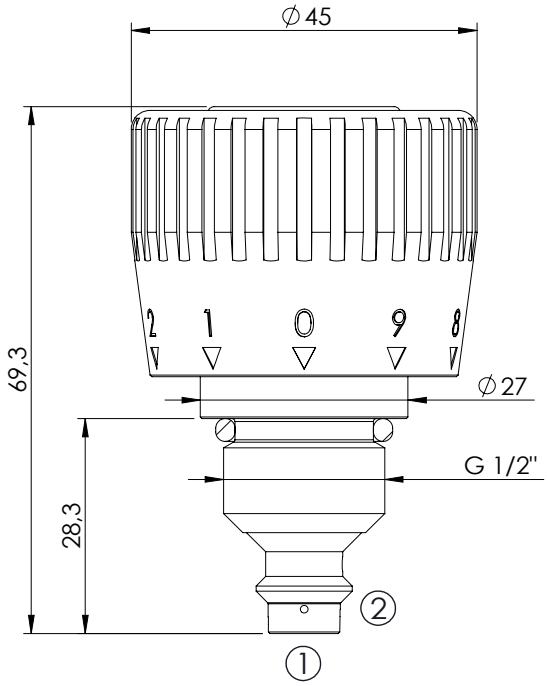

SPECIFICATIONS

Max. operating pressure:	350 bar
Rated flow:	90 l/min
Cavity:	VP000132
Weight:	0,26 kg
Installation torque:	90-100 Nm
Seal kit:	RC700132

ADJUSTMENT OPTIONS

Graduated handknob for flow regulation under pressure

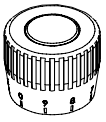

NOTE

Components we be supplied partially disassembled.

Contact AFT sales network for assembling instruction

ORDERING CODES

Quick code	Description	Flow range adjustment (l/min)	Adjustment option
CF000237	CFSN-090-BPSR-06-132-N350	0 - 6	Graduated handknob
CF000238	CFSN-090-BPSR-12-132-N350	0 - 12	Graduated handknob
CF000239	CFSN-090-BPSR-25-132-N350	0 - 25	Graduated handknob
CF000240	CFSN-090-BPSR-32-132-N350	0 - 32	Graduated handknob
CF000392	CFSN-090-BPSR-50-132-N350	0 - 50	Graduated handknob
CF000242	CFSN-090-BPSR-63-132-N350	0 - 63	Graduated handknob
CF000243	CFSN-090-BPSR-70-132-N350	0 - 70	Graduated handknob
CF000244	CFSN-090-BPSR-80-132-N350	0 - 80	Graduated handknob

ACCESSORIES

FLOW CONTROL

ATLANTIC Fluid Tech

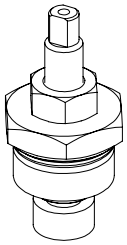

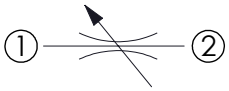

ADJUSTMENT TYPE

REGULATION TYPE

STANDARD (G 3/4")	STANDARD (G 1/2")	FINE

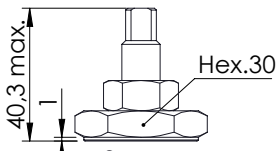

Screw and locknut

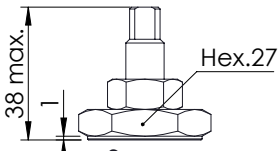

Screw and locknut

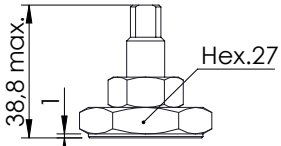

Screw and locknut

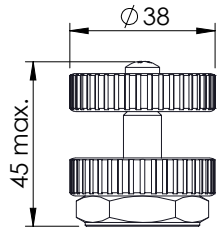

Handknob and locknut

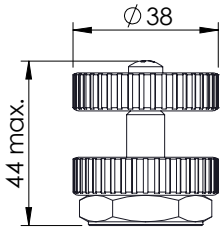

Handknob and locknut

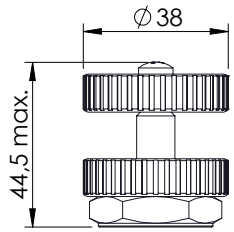

Handknob and locknut

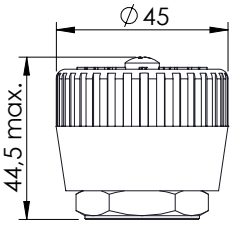

Graduated handknob

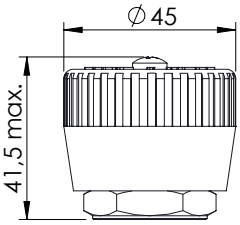

Graduated handknob

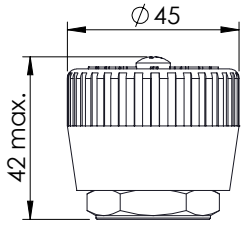

Graduated handknob

REGULATION

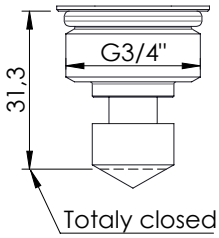

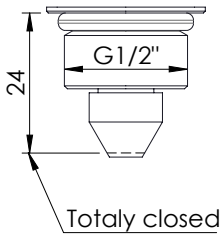

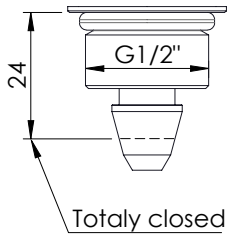

SPECIFICATIONS

Max. operating pressure:	350 bar
Regulated flow:	See table
Cavity:	See table
Weight:	0,1 kg

NOTES

-Spare parts for flow regulations parts parts in body.

-Contact AFT sales network for assembling instruction.

ORDERING CODES

Quick code	Description	Adjustment Options	Regulated sensivity	Max flow regulation (l/min)	Cavity	Install. torque (Nm)
CF000015	CFSN-200-BHSR-NP-096-N350	Screw and locknut	Standard (G3/4")	90 - 190	VP000096 VP000152	120-150
CF000030	CFSN-200-BVSR-NP-096-N350	Handknob and locknut	Standard (G3/4")	90 - 190	VP000096 VP000152	120-150
CF000042	CFSN-200-BMSR-NP-096-N350	Graduated handknob	Standard (G3/4")	90 - 190	VP000096 VP000152	120-150
CF000029	CFSN-090-BHSR-NP-132-N350	Screw and locknut	Standard (G1/2")	55	VP000132	75-85
CF000019	CFSN-090-BVSR-NP-132-N350	Handknob and locknut	Standard (G1/2")	55	VP000132	75-85
CF000033	CFSN-090-BMSR-NP-132-N350	Graduated handknob	Standard (G1/2")	55	VP000132	75-85
CF000036	CFSN-035-BHSR-NP-132-N350	Screw and locknut	Fine	30	VP000132	75-85
CF000037	CFSN-035-BVSR-NP-132-N350	Handknob and locknut	Fine	30	VP000132	75-85
CF000034	CFSN-035-BMSR-NP-132-N350	Graduated handknob	Fine	30	VP000132	75-85

STANDARD PLUG

VP000057/VP000013

ATLANTIC Fluid Tech

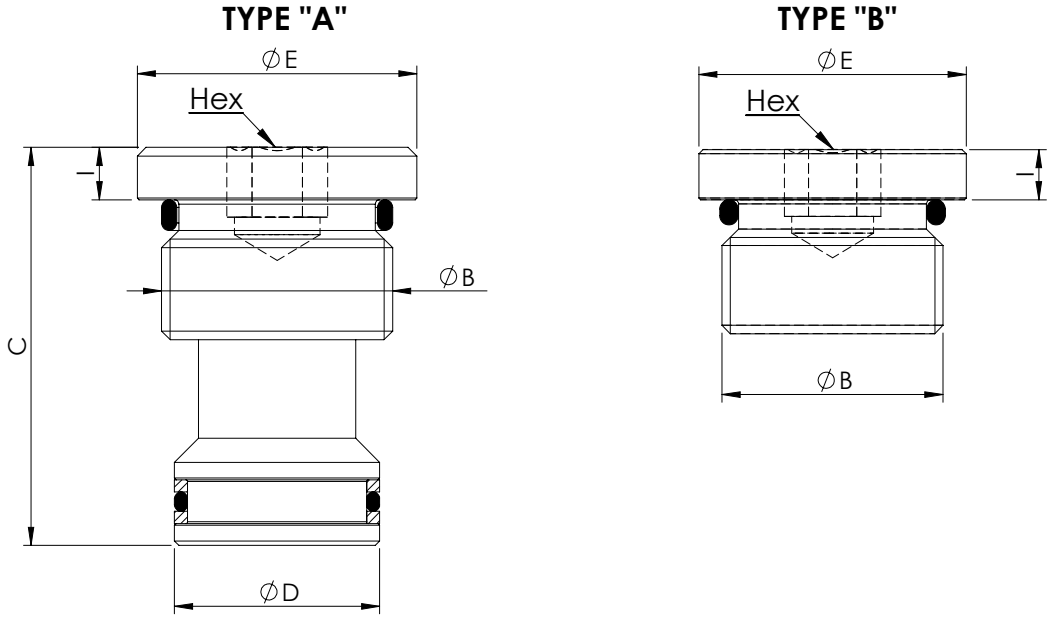

CAVITY A	DIMENSION (mm) B	C	D	E	F	G	Hex	I	CODE Type " A "	TORQUE (Nm)	CODE Type " B "	TORQUE (Nm)
VP000057	G 3/4"	45,5	23,5	32			10	6	ST000259	110-130	ST000278	110-130
VP000013	G 1"	55	30	38			13	6	ST000337	135-150	ST000338	135-150

STANDARD PLUG

SAE-XXX-2N

ATLANTIC Fluid Tech

TYPE "A"

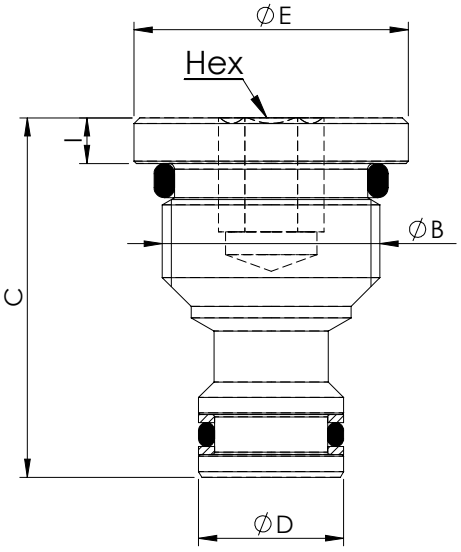

TYPE "B"

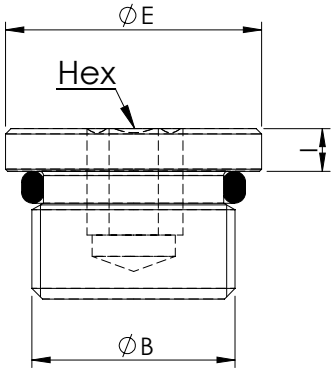

CAVITY A	DIMENSION (mm) B (UNF-2A)	C	D	E	F	G	Hex	I	CODE Type " A "	TORQUE (Nm)	CODE Type " B "	TORQUE (Nm)
SAE-08-2N	3/4-16	31,5	12,7	24			8	4	ST000027	45-50	ST000331	45-50
SAE-10-2N	7/8-14	38	15,87	27			10	6	ST000332	50-55	ST000333	50-55
SAE-12-2N	1 1/16-12			32			13	6			ST000208	100-110
SAE-16-2N	1 5/16-12			38			15	6			ST000396	170-190
SAE-20-2N	1 5/8-12			46			17	6			ST000397	280-320

STANDARD PLUG

SAE-XXX-3N

ATLANTIC Fluid Tech

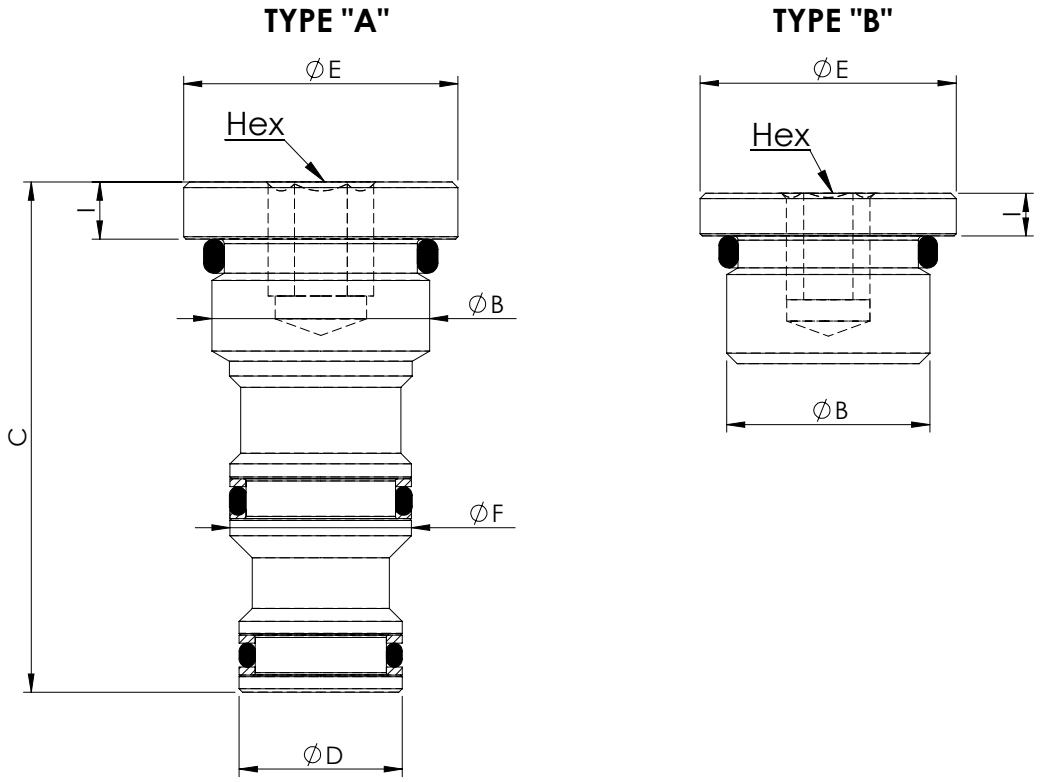

CAVITY A	DIMENSION (mm) B (UNF-2B)	C	D	E	F	G	Hex	I	CODE Type " A "	TORQUE (Nm)	CODE Type " B "	TORQUE (Nm)
SAE-08-3N	3/4-16	44,7	14,27	24	15,87		8	5	ST000292	45-50	ST000331	45-50
SAE-10-3N	7/8-14	53	15,87	27	17,47		10	6	ST000334	50-55	ST000333	50-55
SAE-12-3N	1 1/16-12			32			13	6			ST000208	100-110
SAE-16-3N	1 5/16-12			38			15	6			ST000396	170-190
SAE-20-3N	1 5/8-12			46			17	6			ST000397	280-320

STANDARD PLUG

SAE-XXX-4N

ATLANTIC Fluid Tech

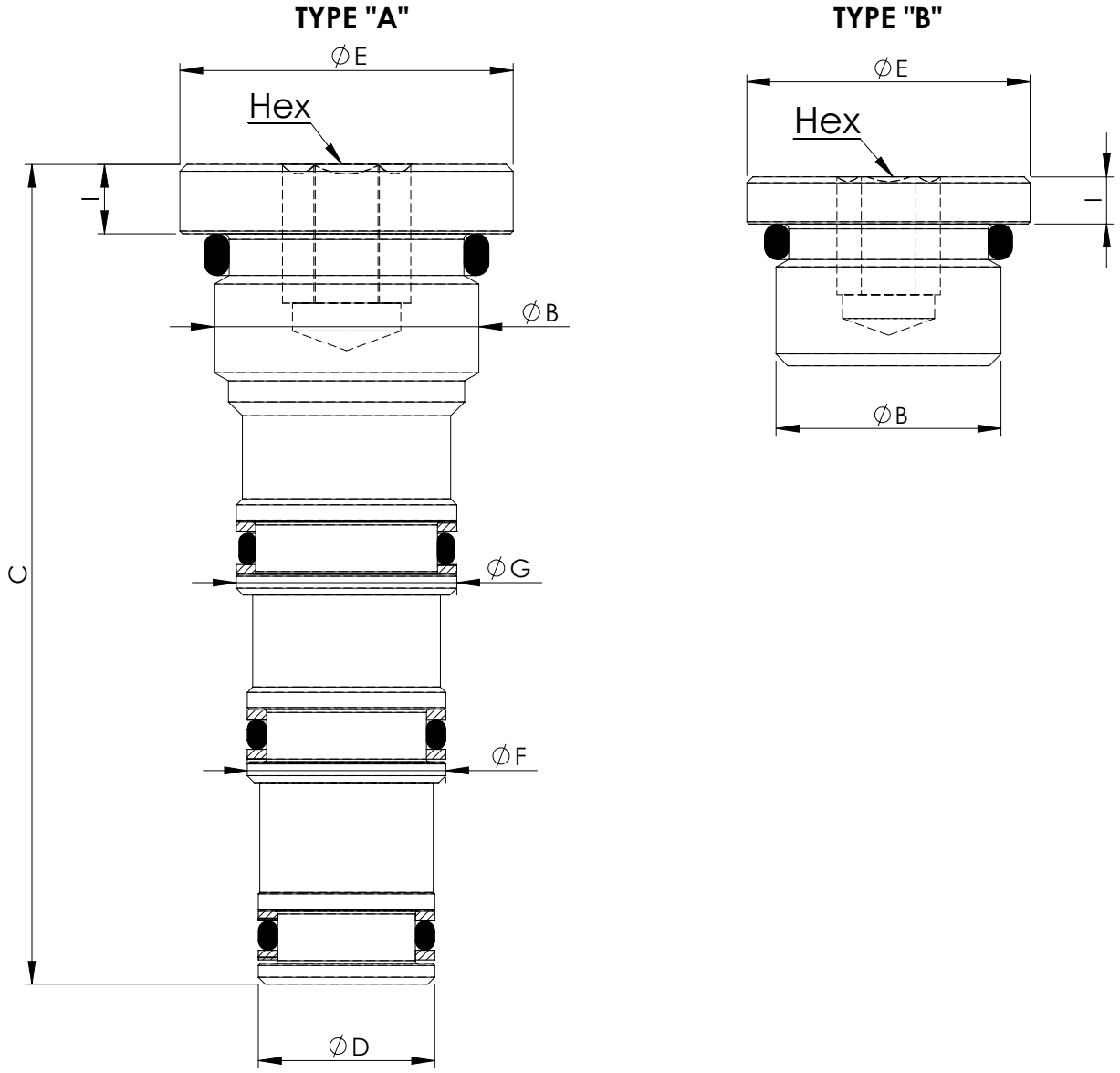

CAVITY A	DIMENSION (mm) B (UNF-2B)	C	D	E	F	G	Hex	I	CODE Type " A "	TORQUE (Nm)	CODE Type " B "	TORQUE (Nm)
SAE-08-4N	3/4-16	59	12,7	24	14,28	15,87	8	5	ST000335	45-50	ST000331	45-50
SAE-10-4N	7/8-14	68,6	15,87	27	17,47	19,05	10	6	ST000336	50-55	ST000333	50-55
SAE-12-4N	1 1/16-12			32			13	6			ST000208	100-110
SAE-16-4N	1 5/16-12			38			15	6			ST000396	170-190
SAE-20-4N	1 5/8-12			46			17	6			ST000397	280-320

SEAL KIT-SPECIAL CAVITIES

ATLANTIC Fluid Tech

CAVITY	BACKUP RING TYPE	NBR 70	NBR 90	VITON 80
VP000005	Single backup ring	RC700005		
	Double backup ring			
VP000006	Single backup ring	RC700006		
	Double backup ring			
VP000008	Single backup ring	RC700008		
	Double backup ring			
VP000013	Single backup ring		RC900013	
	Double backup ring		RD900013	
VP000015	Single backup ring	RC700015		
	Double backup ring			
VP000016	Single backup ring	RC700016		
	Double backup ring			
VP000018	Single backup ring	-		
	Double backup ring	-		
VP000028	Single backup ring	RC700028		
	Double backup ring			
VP000038	Single backup ring	RC700038		
	Double backup ring			
VP000057	Single backup ring		RC900057	
	Double backup ring		RD900057	
VP000058	Single backup ring	RC700058		
	Double backup ring			
VP000065	Single backup ring		RC900065	
	Double backup ring		RD900065	
VP000070	Single backup ring	RC700070		
	Double backup ring			
VP000079	Single backup ring	-		
	Double backup ring	-		
VP000080	Single backup ring		RC900080	
	Double backup ring			
VP000086	Single backup ring	RC700086		
	Double backup ring			
VP000096	Single backup ring			
	Double backup ring			
VP000098	Single backup ring	RC700098		
	Double backup ring			
VP000120	Single backup ring			
	Double backup ring	RD700120		
VP000121	Single backup ring			
	Double backup ring	RD700121		

SEAL KIT - SPECIAL CAVITIES

ATLANTIC Fluid Tech

CAVITY	BACKUP RING TYPE	NBR 70	NBR 90	VITON 80
VP000127	Single backup ring			
	Double backup ring		RD900127	
VP000128	Single backup ring			
	Double backup ring		RD900128	
VP000132	Single backup ring			
	Double backup ring	RC700132		
VP000154	Single backup ring		RC900154	
	Double backup ring			
VP000158	Single backup ring	-		
	Double backup ring	-		
VP000161	Single backup ring	RC700161		
	Double backup ring			
VP000165	Single backup ring	RC700165		
	Double backup ring			
VP000166	Single backup ring	RC700166		
	Double backup ring			
VP000174	Single backup ring			
	Double backup ring	RD700174		
VP000178	Single backup ring	RC700178		
	Double backup ring			
VP000180	Single backup ring			
	Double backup ring			
VP000189	Single backup ring	RC700189		
	Double backup ring			
VP000193	Single backup ring	RC700193		
	Double backup ring			
VP000198	Single backup ring			
	Double backup ring	RD700198		
VP000202	Single backup ring	-		
	Double backup ring	-		
VP000204	Single backup ring	RC700204		
	Double backup ring			
VP000216	Single backup ring	RC700216		
	Double backup ring			
VP000249	Single backup ring		RC900249	
	Double backup ring			
VP000250	Single backup ring		RC900250	
	Double backup ring			
VP000263	Single backup ring	RC700263		
	Double backup ring			

SEAL KIT

SEAL KIT - SPECIAL CAVITIES

CAVITY	BACKUP RING TYPE	NBR 70	NBR 90	VITON 80
VP000307	Single backup ring	-		
	Double backup ring	-		
VP000309	Single backup ring	-		
	Double backup ring	-		
VP000310	Single backup ring	-		
	Double backup ring	-		
VP000311	Single backup ring	-		
	Double backup ring	-		
VP000312	Single backup ring	-		
	Double backup ring	-		
VP000314	Single backup ring	RC700314		
	Double backup ring			
VP000330	Single backup ring	RC700330		
	Double backup ring			
VP000338	Single backup ring			
	Double backup ring	RD700338		
VP000371	Single backup ring	RC700371		
	Double backup ring			
VP000445	Single backup ring	RC700445		
	Double backup ring			

SEAL KIT-STANDARD CAVITIES

ATLANTIC Fluid Tech

CAVITY	BACKUP RING TYPE	NBR 70	NBR 90	VITON 80
SAE-08-2N	Single backup ring	RA700081	RA900081	
	Double backup ring	RB700081	RB900081	
SAE-10-2N	Single backup ring	RA700082	RA900082	
	Double backup ring	RB700082	RB900082	
SAE-12-2N	Single backup ring	RA700083	RA900083	
	Double backup ring			
SAE-16-2N	Single backup ring	RA700084	RA900084	
	Double backup ring			
SAE-20-2N	Single backup ring		RA900085	
	Double backup ring			
SAE-08-3C	Single backup ring	RA700086		
	Double backup ring			
SAE-10-3C	Single backup ring	RA700087		
	Double backup ring	RB700087		
SAE-12-3C	Single backup ring			
	Double backup ring			
SAE-16-3C	Single backup ring			
	Double backup ring			
SAE-20-3C	Single backup ring			
	Double backup ring		RB900090	
SAE-08-3N	Single backup ring			
	Double backup ring	RB700091		
SAE-10-3N	Single backup ring	RA700092		
	Double backup ring	RB700092		
SAE-12-3N	Single backup ring	RA700093		
	Double backup ring			
SAE-16-3N	Single backup ring			
	Double backup ring	RB700094		
SAE-20-3N	Single backup ring			
	Double backup ring			
SAE-08-4N	Single backup ring			
	Double backup ring	RB700101		
SAE-10-4N	Single backup ring			
	Double backup ring	RB700102		
SAE-124-N	Single backup ring			
	Double backup ring	RB700103		
SAE-16-4N	Single backup ring			
	Double backup ring	RB700104		
SAE-20-4N	Single backup ring			
	Double backup ring			

ATLANTIC
Fluid Tech

SECTION 23

Standard Manifolds

MANAGEMENT SYSTEM CERTIFICATION
DNV·GL
ISO 9001 = ISO 14001
OHSAS 18001

STANDARD MANIFOLDS

ATLANTIC Fluid Tech

Description	Material	Valve type	Max. pressure (bar)	Installation	Port size	Page
SAE-XX-2N	Aluminium	Two way	250	In line	See datasheet	23.00.**010** - 23.00.**020**
SAE-XX-2N	Steel	Two way	350	In line	See datasheet	
SAE-XX-3C	Aluminium	Three way	250	In line	See datasheet	23.00.**030**
SAE-XX-3C	Steel	Three way	350	In line	See datasheet	23.00.**030**
SAE-XX-3N	Aluminium	Three way	250	In line	See datasheet	23.00.**040**
SAE-XX-3N	Steel	Three way	350	In line	See datasheet	23.00.**040**
SAE-XX-4N-3P	Aluminium	Four way, three ports	250	In line	See datasheet	23.00.**050**
SAE-XX-4N-3P	Steel	Four way, three ports	350	In line	See datasheet	23.00.**050**
SAE-XX-4N	Aluminium	Four way	250	In line	See datasheet	23.00.**060**
SAE-XX-4N	Steel	Four way	350	In line	See datasheet	23.00.**060**
VP000057	Aluminium	Two way	250	In line	See datasheet	23.00.**070**
VP000057	Steel	Two way	350	In line	See datasheet	23.00.**070**
VP000013	Aluminium	Two way	250	In line	See datasheet	23.00.**070**
VP000013	Steel	Two way	350	In line	See datasheet	23.00.**070**
VP000180	Aluminium	Two way	250	In line	See datasheet	23.00.**070**
VP000180	Steel	Two way	350	In line	See datasheet	23.00.**070**
SAE-XX-2N	Aluminium	Two way, with override screw	250	In line	See datasheet	23.00.**080**
SAE-XX-2N	Steel	Two way, with override screw	350	In line	See datasheet	23.00.**080**
VP000057	Aluminium	Two way, with override screw	250	In line	See datasheet	23.00.**090**
VP000057	Steel	Two way, with override screw	350	In line	See datasheet	23.00.**090**
VP000013	Aluminium	Two way, with override screw	250	In line	See datasheet	23.00.**090**
VP000013	Steel	Two way, with override screw	350	In line	See datasheet	23.00.**090**

STANDARD MANIFOLDS

SAE-XX-2N

ATLANTIC Fluid Tech

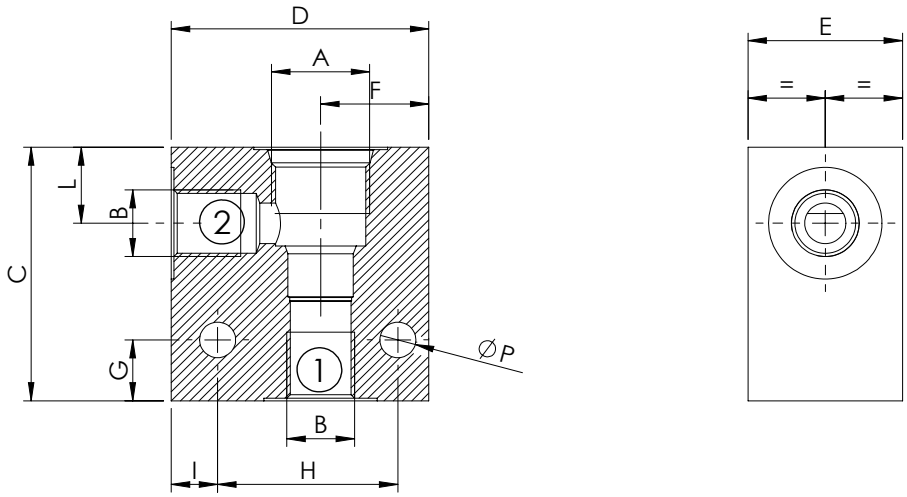

CAVITY	DIMENSIONS (mm)												QUICK CODE	
A	B	C	D	E	F	G	H	I	L	M	N	P	Steel	Aluminium
SAE-08-2N	G 1/4"	50	50	30	21	12	35	9	15			7	LK000018	LK000017
	G 3/8"	50	50	30	21	12	35	9	15			7	LK000020	LK000019
	G 1/2"	50	50	35	23	12	35	9	16			7	LK000390	LK000247
	7/16-20	50	50	30	21	12	35	9	15			7		
	9/16-18	50	50	30	21	12	35	9	15			7		
SAE-10-2N	G 3/8"	60	60	35	25	15	45	7	19			7	LK000022	LK000021
	G 1/2"	60	60	35	25	15	45	7	19			7	LK000024	LK000023
	G 3/4"	60	60	40	27,5	15	45	9	20			7	LK000047	LK000046
SAE-12-2N	G 1/2"	75	80	40	35	20	60	10	26,5			9	LK000207	LK000208
	G 3/4"	75	80	40	35	20	60	10	26,5			9	LK000205	LK000206
SAE-16-2N	G 3/4"	80	90	50	37	22	60	20	26			9	LK000156	LK000157
	G 1"	80	90	50	37	22	60	20	26			9	LK000154	LK000155
SAE-20-2N														

STANDARD MANIFOLDS

SAE-XX-2N

ATLANTIC Fluid Tech

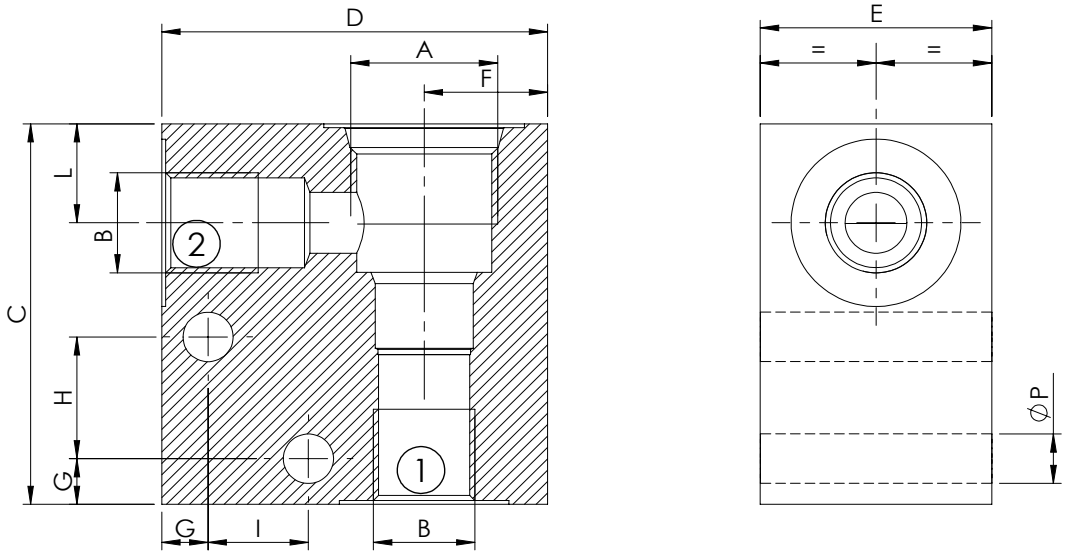

CAVITY	DIMENSIONS (mm)												QUICK CODE	
A	B	C	D	E	F	G	H	I	L	M	N	P	Steel	Aluminium
SAE-08-2N	G 1/4"	50	50	30	16	6	16	13	13			6,5	LK000086	LK000005
	G 3/8"	50	50	30	16	6	16	13	13			6,5	LK000085	LK000077
	7/16-20	50	50	30	16	6	16	13	13			6,5	LK000277	LK000148
	9/16-18	50	50	30	16	6	16	13	13			6,5	LK000076	LK000278
SAE-10-2N														
SAE-12-2N														
SAE-16-2N														
SAE-20-2N														

STANDARD MANIFOLDS

SAE-XX-3C

ATLANTIC Fluid Tech

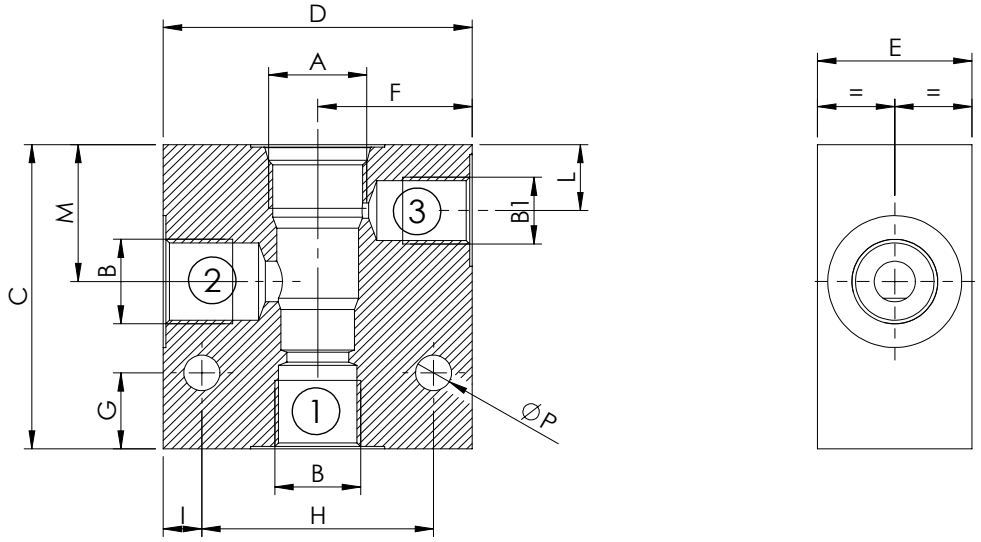

CAVITY	DIMENSIONS (mm)												QUICK CODE	
A	B	B1	C	D	E	F	G	H	I	L	M	P	Steel	Aluminium
SAE-08-3C	G 3/8"	G 1/4"	60	60	30	30	15	45	7,5	13	27	7	LK000279	LK000033
SAE-10-3C	G 3/8"	G 1/4"	70	60	35	30	15	45	7,5	15	32	7	LK000280	LK000034
SAE-12-3C	G 1/2"	G 1/4"	80	75	40	35	15	55	10	24	42	7	LK000165	LK000164
	G 3/4"	G 1/4"	90	75	40	35	15	55	10	24	42	7	LK000210	LK000211
	7/8-14	9/16-18	80	75	40	35	15	55	10	24	42	9	LK000263	LK000262
SAE-16-3C	G 1"	G 1/4"	90	90	50	40	22	70	10	18,5	39	9	LK000212	LK000213
	G 3/4"	G 1/4"	90	80	50	38	22	60	10	18,5	39	9	LK000264	LK000265
	1 5/16-12	7/16-20	90	90	50	40	22	70	10	18,5	39	9	LK000266	LK000267
SAE-20-3C	G 1"	G 1/4"	110	100	60	45	25	75	12,5	21	51	11	LK000268	LK000269
	G 1-1/4"	G 1/4"	110	100	60	45	25	75	12,5	21	51	11	LK000270	LK000271
	1 5/8-12	7/16-20	110	100	60	45	25	75	12,5	21	51	11	LK000272	LK000273

STANDARD MANIFOLDS

SAE-XX-3N

ATLANTIC Fluid Tech

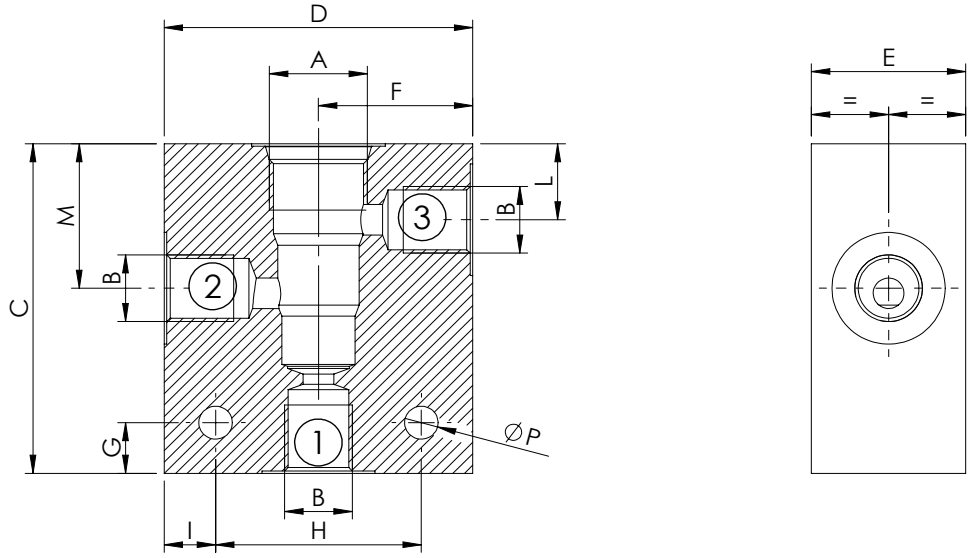

CAVITY	DIMENSIONS (mm)												QUICK CODE	
A	B	C	D	E	F	G	H	I	L	M	N	P	Steel	Aluminium
SAE-08-3N	G 1/4"	65	60	30	30	10	40	10	15	28,5		6,5	LK000089	LK000008
	G 3/8"	65	60	30	30	10	40	10	15	28,5		6,5	LK000090	LK000009
SAE-10-3N	G 1/4"	65	65	35	32,5	10	50	7,5	18	35		6,5	LK000035	LK000012
	G 3/8"	65	60	35	30	10	45	7,5	18	34,5		7	LK000027	LK000013
	G 1/2"	70	70	35	35	15	50	10	18	34,5		7	LK000131	LK000057
SAE-12-3N	G 1/2"	100	80	40	42,5	15	55	12,5	29	54		7	LK000100	LK000281
	G 3/4"	100	80	40	40	15	55	12,5	29	54		7	LK000294	LK000295
SAE-16-3N	G 3/4"	100	90	50	45	20	60	15	26	54,5		10,5	LK000256	LK000257
SAE-20-3N														

STANDARD MANIFOLDS

SAE-XX-4N 3P

THREE PORTS

ATLANTIC Fluid Tech

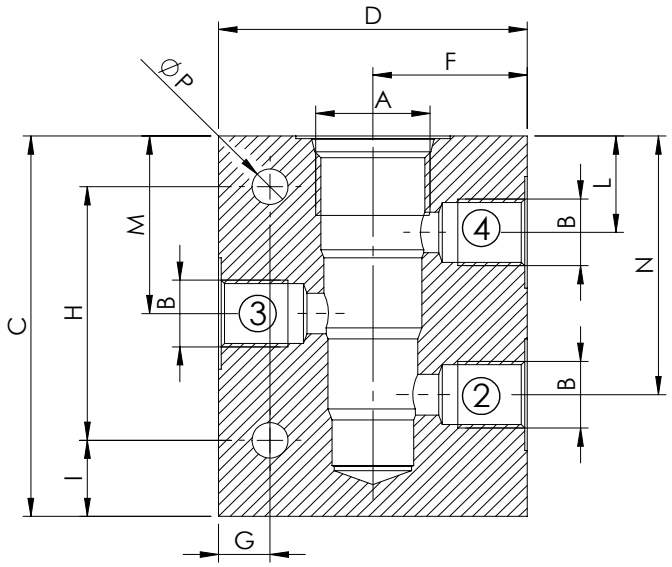

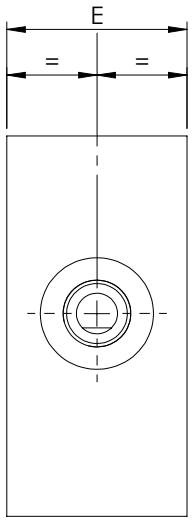

CAVITY	DIMENSIONS (mm)												QUICK CODE	
A	B	C	D	E	F	G	H	I	L	M	N	P	Steel	Aluminium
SAE-08-4N	G 3/8"	75	60	35	30	10	50	15	15	29	43	7	LK000063	LK000376
SAE-10-4N	G 1/4"	75	60	35	30	10	50	15	19	35	51	7	LK000040	LK000038
	G 3/8"	75	60	35	30	10	50	15	19	35	51	7	LK000016	LK000037
	G 1/2"	85	65	35	32,5	10	50	15	19	35	51	7	LK000041	LK000039
	9/16-18	75	60	35	30	10	50	15	19	35	51	7	LK000331	LK000330
	1/4 JIS	75	60	35	30	10	50	15	19	35	51	7	LK000249	LK000367
SAE-12-4N	G 3/4"	120	80	40	40	12	90	15	28,5	53,5	78,5	7	LK000416	LK000417
SAE-16-4N	G 3/4"	120	90	50	45	12	90	15	25,5	54	82,5	8,5	LK000222	LK000225
	1 1/16 JIS	120	90	50	45	12	90	15	25,5	54	82,5	8,5	LK000223	LK000224
SAE-20-4N														

STANDARD MANIFOLDS

SAE-XX-4N

ATLANTIC Fluid Tech

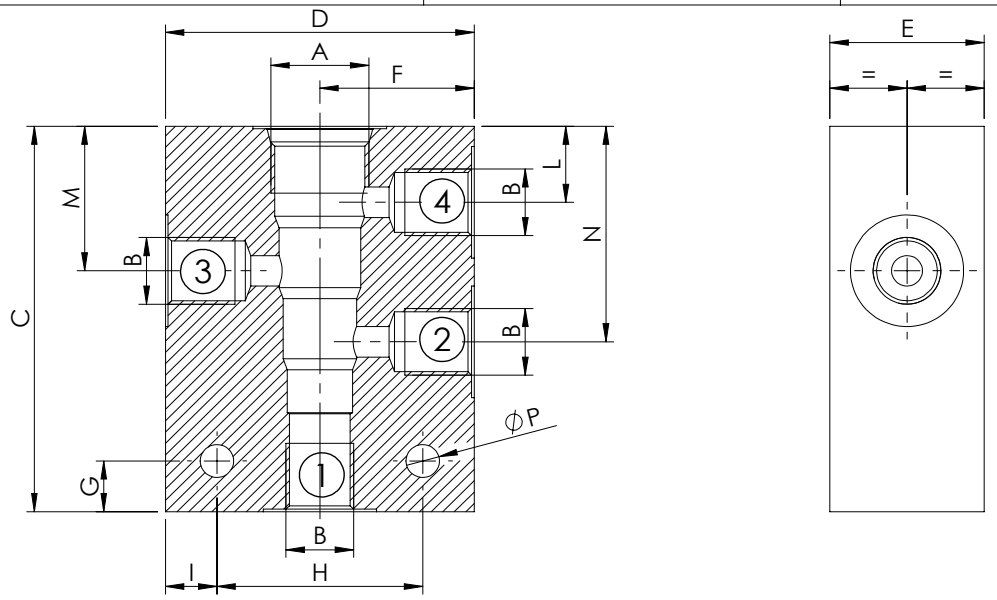

CAVITY	DIMENSIONS (mm)												QUICK CODE	
A	B	C	D	E	F	G	H	I	L	M	N	P	Steel	Aluminium
SAE-08-4N	G 1/4"	76	60	30	30	10	40	10	15	28,5	42,5	6,5	LK000282	LK000015
	G 3/8"	76	60	30	30	10	40	10	15	28,5	42,5	6,5	LK000276	LK000014
SAE-10-4N	G 1/4"	80	65	35	32,5	10	50	7,5	18	35	50	6,5	LK000231	LK000010
	G 3/8"	85	60	35	30	15	45	7,5	19	35	51	7	LK000043	LK000011
SAE-12-4N	G 3/4"	125	80	40	40	20	55	12,5	28,5	53,5	79,5	7	LK000418	LK000419
SAE-16-4N														
SAE-20-4N														

STANDARD MANIFOLDS

VP000XXX

ATLANTIC Fluid Tech

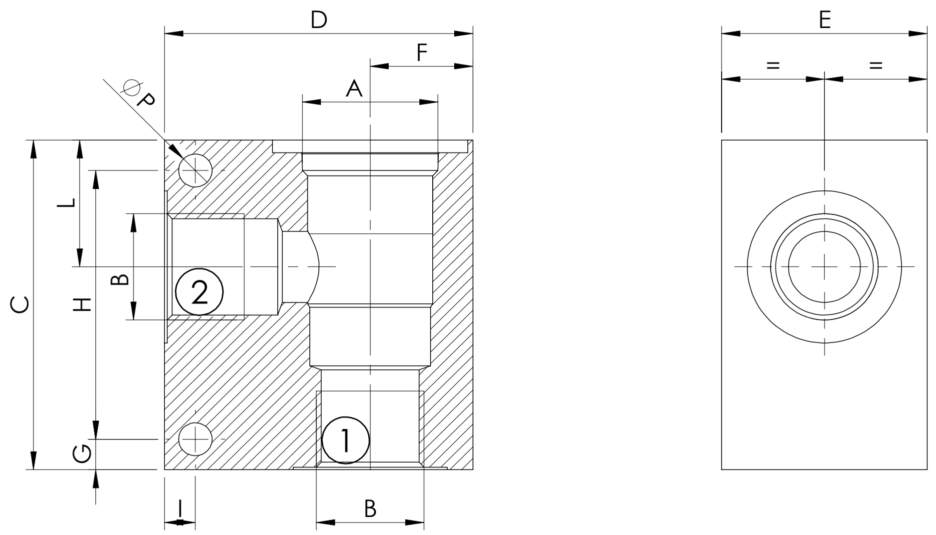

CAVITY A	DIMENSIONS (mm) B	C	D	E	F	G	H	I	L	M	N	P	QUICK CODE Steel	Aluminium
VP000057	G 1/2"	65	60	40	20	6	53	6	25			6,5	LK000071	LK000055
	G 3/4"	65	60	40	20	6	53	6	25			6,5	LK000075	LK000065
	3/4-16	65	60	40	20	6	53	6	25			6,5	LK000275	LK000283
	7/8-14	65	60	40	20	6	53	6	25			6,5	LK000363	LK000366
	M22x1,5	65	60	40	20	6	53	6	25			6,5	LK000393	LK000392
VP000013	G 3/4"	80	80	50	26	7,5	65	7,5	31			8,5	LK000078	LK000066
	G 1"	80	80	50	26	7,5	65	7,5	31			8,5	LK000061	LK000042
VP000180	G 1-1/4"	100	90	70	35	17	75	15	39			8,5	LK000087	LK000094

STANDARD MANIFOLDS

SAE-XX-2N

WITH OVERRIDE SCREW

ATLANTIC Fluid Tech

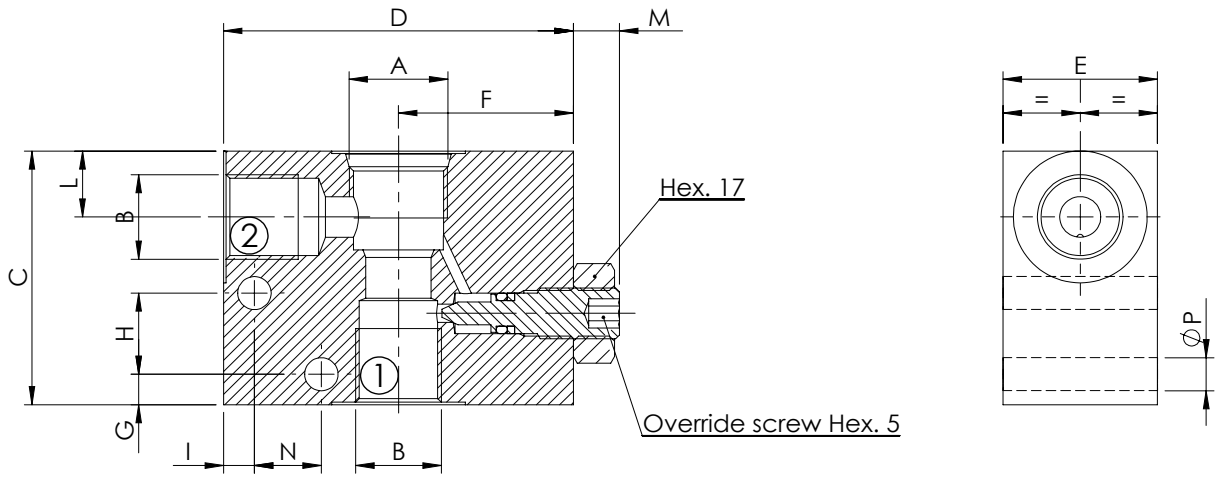

CAVITY	DIMENSIONS (mm)												QUICK CODE	
A	B	C	D	E	F	G	H	I	L	M	N	P	Steel	Aluminium
SAE-08-2N	G 1/4"	50	68	30	34	6	16	6	13	9	13	6,5	KS000009	KS000003
	G 3/8"	50	68	30	34	6	16	6	13	9	13	6,5	KS000008	KS000002

STANDARD MANIFOLDS

VP0000XX

WITH OVERRIDE SCREW

ATLANTIC Fluid Tech

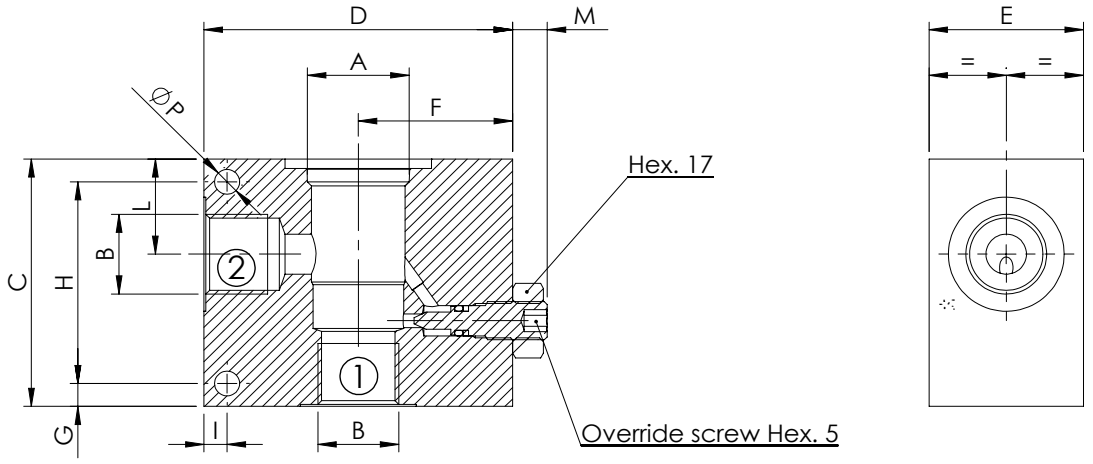

CAVITY	DIMENSIONS (mm)												QUICK CODE	
A	B	C	D	E	F	G	H	I	L	M	N	P	Steel	Aluminium
VP000057	G 1/2"	65	80	40	40	6	53	6	25	9		6,5	KS000007	KS000001
	G 3/4"	65	80	40	40	6	53	6	25	9		6,5	KS000010	KS000004
VP000013	G 3/4"	80	90	50	47	7,5	65	7,5	31	9		8,5	KS000012	KS000005
	G 1"	80	90	50	47	7,5	65	7,5	31	9		8,5	KS000011	KS000006

ATLANTIC
Fluid Tech

SECTION 24

Cavities and Technical Drawings

MANAGEMENT SYSTEM CERTIFICATION
DNV·GL
ISO 9001 = ISO 14001
OHSAS 18001

CAVITIES AND TECHNICAL DRAWINGS

CAVITIES AND TECHNICAL DRAWINGS

SAE-XX-2N

ATLANTIC Fluid Tech

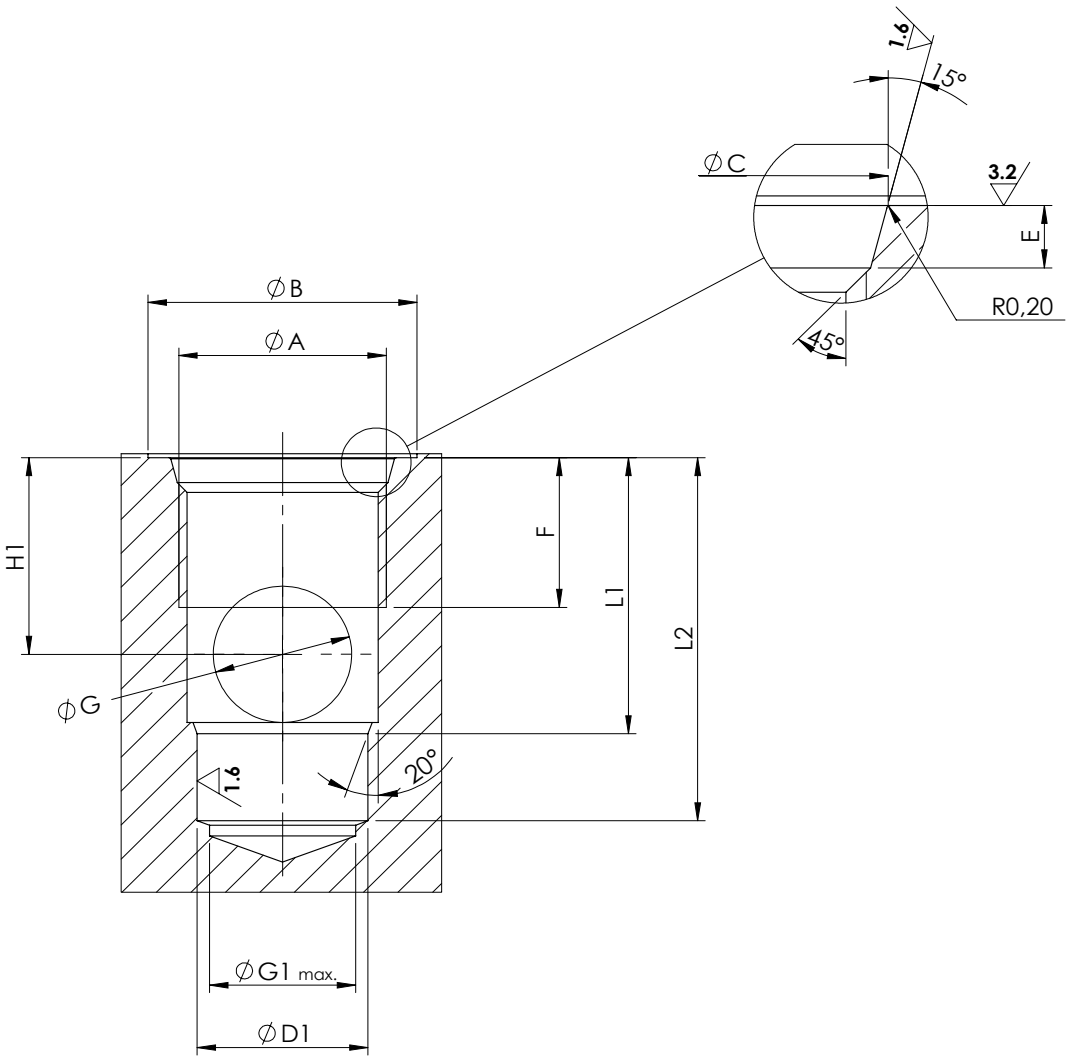

General tolerances : 0.3mm ◎ 0.03 ⊥ 0.02

	SAE-08-2N	SAE-10-2N	SAE-12-2N	SAE-16-2N	SAE-20-2N
A	3/4-16 UNF	7/8-14 UNF	1-1/16 12 UNF	1-5-16 12 UNF	1-5/8 12 UNF
B	26	30	35	42	48
C	$20.6^{+0,1}_{0}$	$23.9^{+0,1}_{0}$	$29.2^{+0,1}_{0}$	$35.5^{+0,1}_{0}$	$43.5^{+0,1}_{0}$
D1	$12.7^{+0,05}_{0}$	$15.87^{+0,05}_{0}$	$22.22^{+0,05}_{0}$	$28.60^{+0,05}_{0}$	$36.52^{+0,05}_{0}$
E	$2.6^{+0,3}_{0}$	$2.6^{+0,3}_{0}$	$3.3^{+0,3}_{0}$	$3.3^{+0,3}_{0}$	$3.4^{+0,3}_{0}$
F	13	15	20	20	22
G	9	12	18	19	25
G1	12	15	19	24	30
H1	14	18	26	25	32
L1	20.5	25.5	36.5	36	44.5
L2	29	34.5	48	49	59

CAVITIES AND TECHNICAL DRAWINGS

SAE-XX-3C

ATLANTIC Fluid Tech

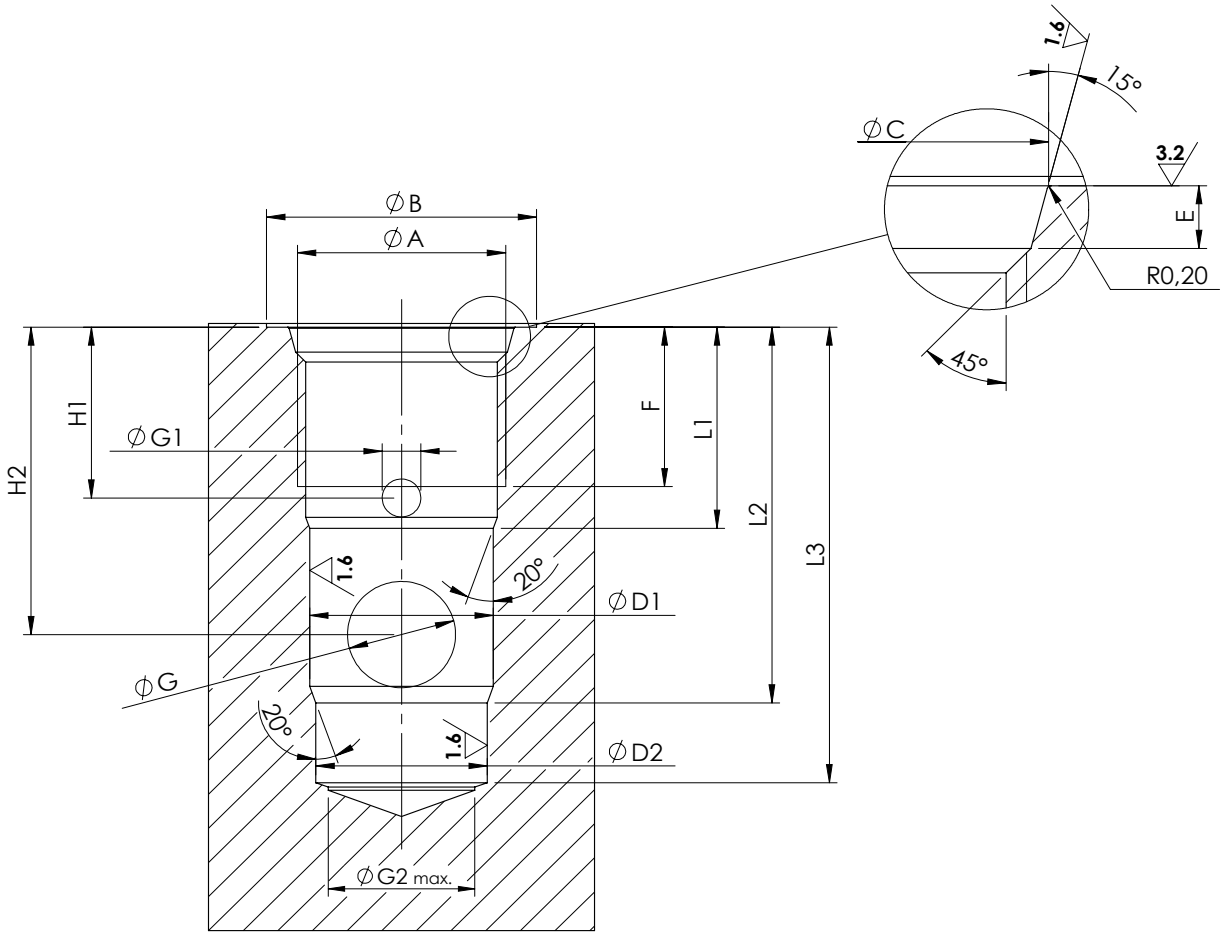

General tolerances : 0.03 mm

◎	0.03
⊥	0.02

	SAE-08-3C	SAE-10-3C	SAE-12-3C	SAE-16-3C	SAE-20-3C
A	3/4-16 UNF	7/8-14 UNF	1-1/16 12 UNF	1-5/16 12 UNF	1-5/8 12 UNF
B	26	30	35	42	48
C	$20.6^{+0.1}_{0}$	$23.9^{+0.1}_{0}$	$29.2^{+0.1}_{0}$	$35.5^{+0.1}_{0}$	$43.5^{+0.1}_{0}$
D1	$15.87^{+0.05}_{0}$	$19.05^{+0.05}_{0}$	$23.80^{+0.05}_{0}$	$28.6^{+0.05}_{0}$	$36.52^{+0.05}_{0}$
D2	$14.27^{+0.05}_{0}$	$17.47^{+0.05}_{0}$	$22.22^{+0.05}_{0}$	$25.42^{+0.05}_{0}$	$33.35^{+0.05}_{0}$
E	$2.6^{+0.3}_{0}$	$2.6^{+0.3}_{0}$	$3.3^{+0.3}_{0}$	$3.3^{+0.3}_{0}$	$3.4^{+0.3}_{0}$
F	12	13	21	16.5	20
G	8	14	14	15	28
G1	3	4	5	5	7
G2	12	15	19	24	30
H1	12.5	14	22.5	17.5	20
H2	26.5	31.5	40.5	38	50
L1	16	18	26.5	22	25.5
L2	32	40	49.5	47.5	65.5
L3	40	49	60	58	78

CAVITIES AND TECHNICAL DRAWINGS

SAE-XX-3N

ATLANTIC Fluid Tech

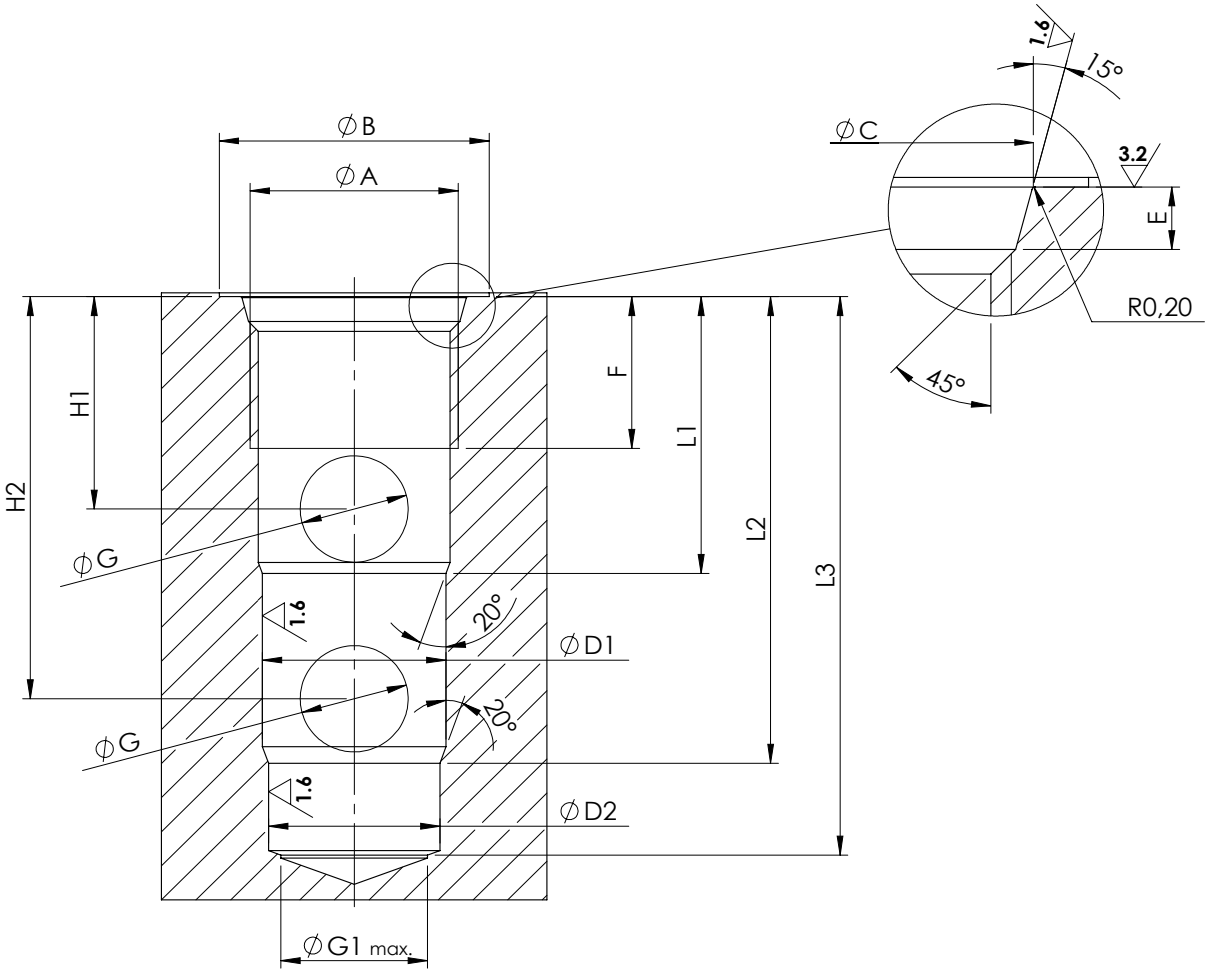

General tolerances : 0.03 mm

◎	0.03
⊥	0.02

	SAE-08-3N	SAE-10-3N	SAE-12-3N	SAE-16-3N	SAE-20-3N
A	3/4-16 UNF	7/8-14 UNF	1-1/16 12 UNF	1-5/16 12 UNF	1-5/8 12 UNF
B	26	30	35	42	54
C	$20.60^{+0,1}_{0}$	$23.90^{+0,1}_{0}$	$29.20^{+0,1}_{0}$	$35.50^{+0,1}_{0}$	$43.5^{+0,1}_{0}$
D1	$15.87^{+0,05}_{0}$	$17.47^{+0,05}_{0}$	$23.80^{+0,05}_{0}$	$28.60^{+0,05}_{0}$	$36.52^{+0,05}_{0}$
D2	$14.27^{+0,05}_{0}$	$15.87^{+0,05}_{0}$	$22.22^{+0,05}_{0}$	$27.00^{+0,05}_{0}$	$33.35^{+0,05}_{0}$
E	$2.6^{+0,3}_{0}$	$2.6^{+0,3}_{0}$	$3.3^{+0,3}_{0}$	$3.3^{+0,3}_{0}$	$3.4^{+0,3}_{0}$
F	13	14	20	20	22
G	6	8	14	17	25
G1	12	15	19	24	30
-	-	-	-	-	-
H1	15	18	28	25.5	32
H2	29	34	53	54	72
L1	19.50	23.5	36.5	35.5	46
L2	33.50	39.50	61.50	64	86
L3	43	48.50	73	75	100

CAVITIES AND TECHNICAL DRAWINGS

SAE-XX-4N

ATLANTIC Fluid Tech

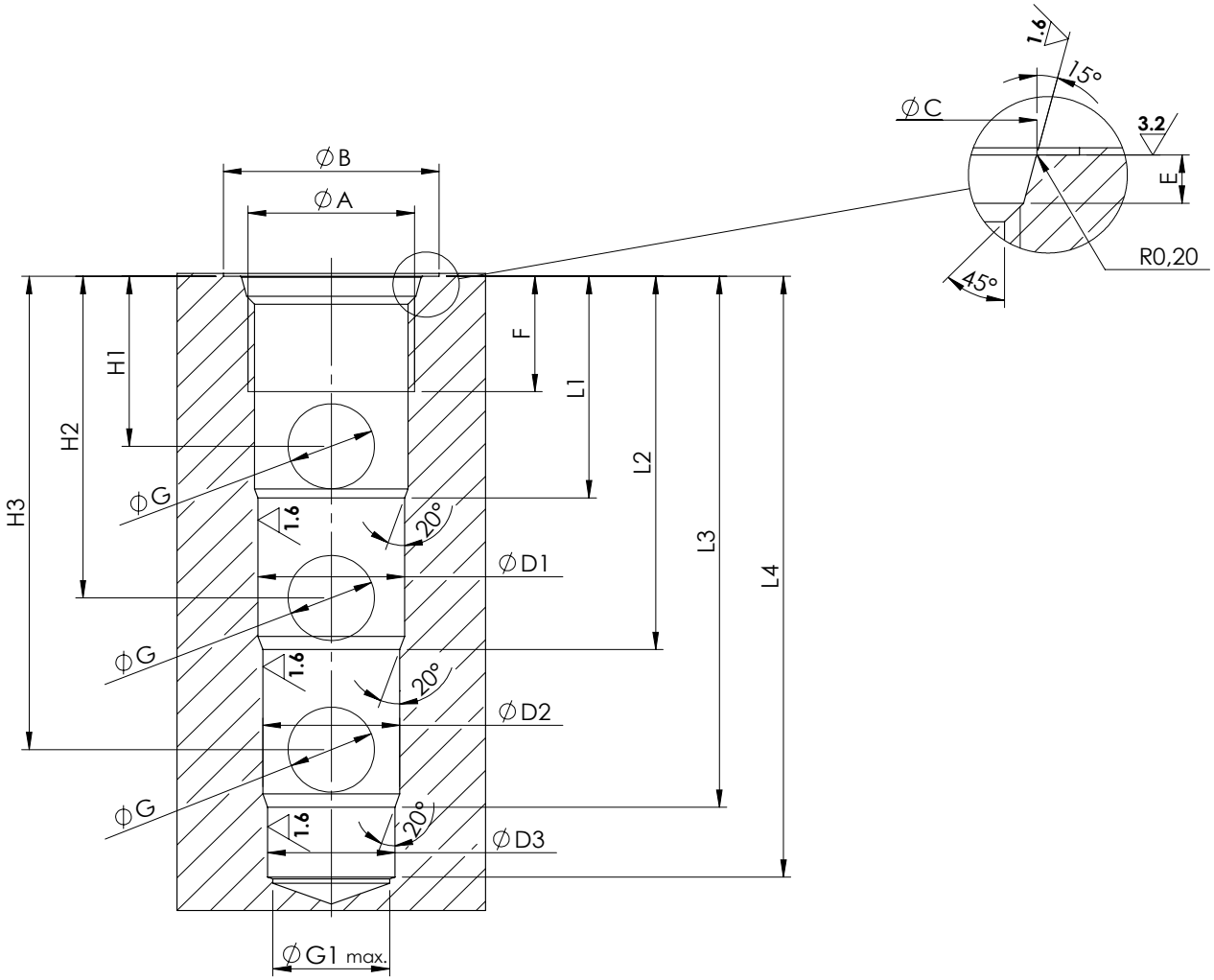

General tolerances: 0.03 mm

◎	0.03
⊥	0.02

	SAE-08-4N	SAE-10-4N	SAE-12-4N	SAE-16-4N	SAE-20-4N
A	3/4-16 UNF	7/8-14 UNF	1-1/16 12 UNF	1-5/16 12 UNF	1-5/8 12 UNF
B	26	30	35	42	48
C	$20.60^{+0,1}_{0}$	$23.90^{+0,1}_{0}$	$29.20^{+0,1}_{0}$	$35.50^{+0,1}_{0}$	$43.5^{+0,1}_{0}$
D1	$15.87^{+0,05}_{0}$	$19.05^{+0,05}_{0}$	$23.80^{+0,05}_{0}$	$28.60^{+0,05}_{0}$	$36.52^{+0,05}_{0}$
D2	$14.27^{+0,05}_{0}$	$17.47^{+0,05}_{0}$	$22.22^{+0,05}_{0}$	$27.00^{+0,05}_{0}$	$33.35^{+0,05}_{0}$
D3	$12.7^{+0,05}_{0}$	$15.87^{+0,05}_{0}$	$20.62^{+0,05}_{0}$	$25.42^{+0,05}_{0}$	$31.75^{+0,05}_{0}$
E	$2.6^{+0,3}_{0}$	$2.6^{+0,3}_{0}$	$3.3^{+0,3}_{0}$	$3.3^{+0,3}_{0}$	$3.4^{+0,3}_{0}$
F	13	15	19	20	22
G	6	8	14	16	25
G1	12	15	19	24	30
H1	15	18	28	25	32
H2	29	34	53	53.5	72
H3	43	50	78	82	114
L1	19.5	23.5	36.5	35.5	46
L2	33.5	39.5	61.5	64	87
L3	47.5	55.5	87.5	92.5	128.5
L4	56	64.5	99	104	142

SPECIAL CAVITIES

ATLANTIC Fluid Tech

VP000005

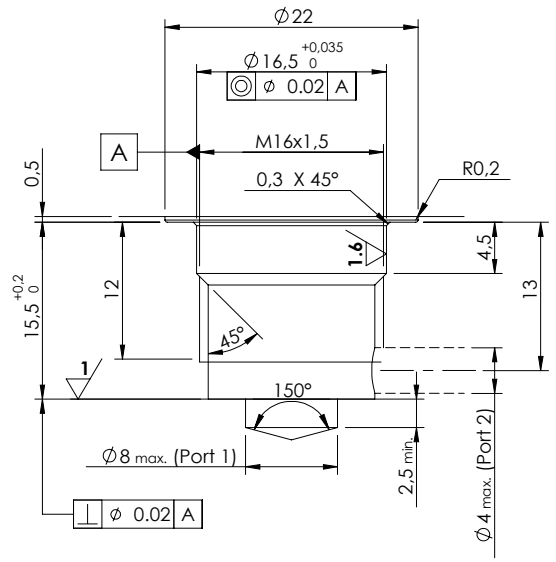

VP000006

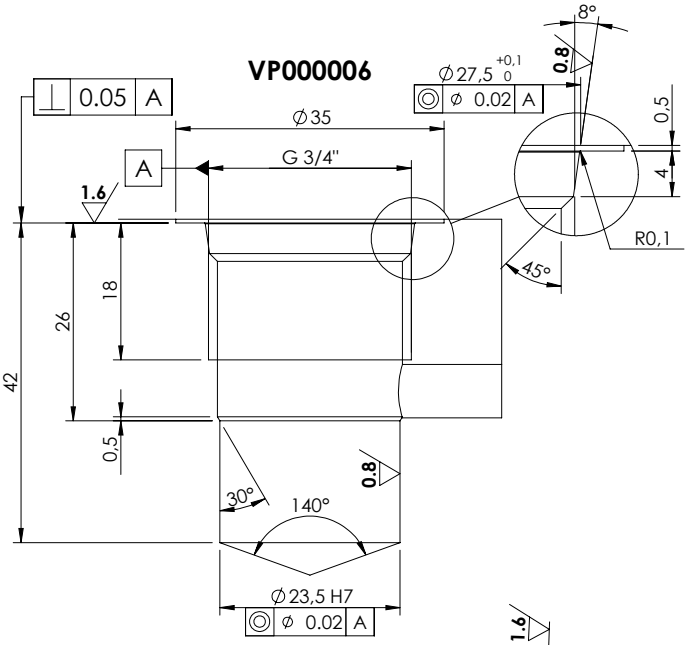

VP000008

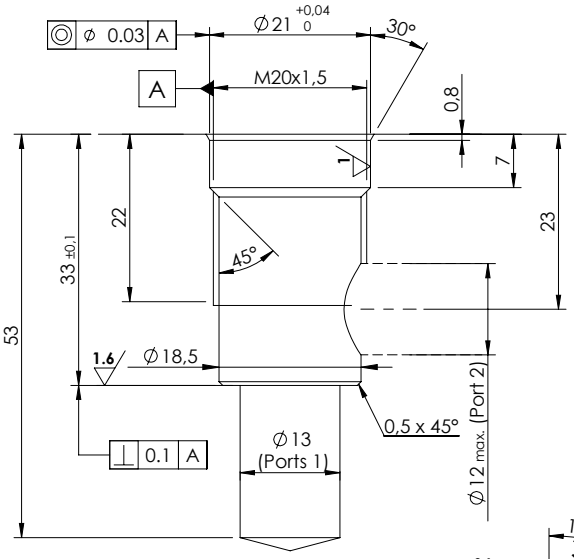

VP000013

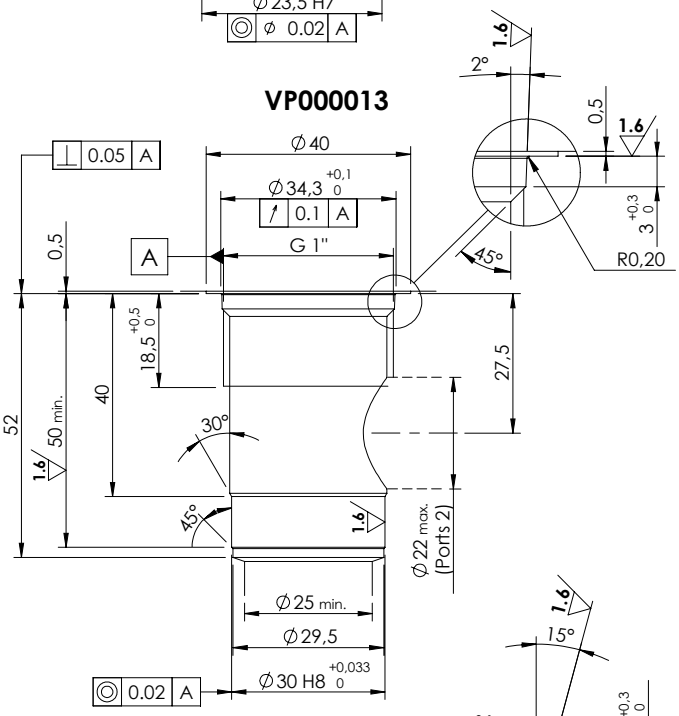

VP000015

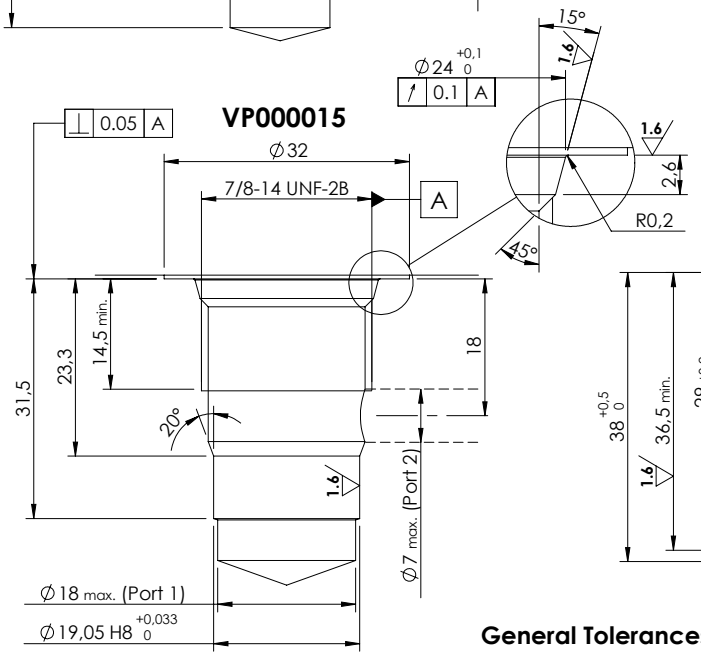

VP000016

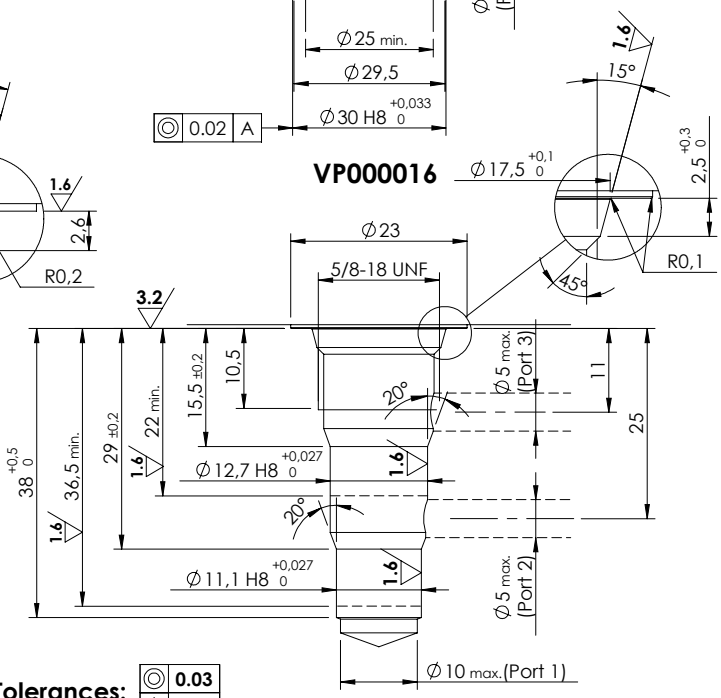

General Tolerances: ◎ 0.03 ⊥ 0.02

SPECIAL CAVITIES

ATLANTIC Fluid Tech

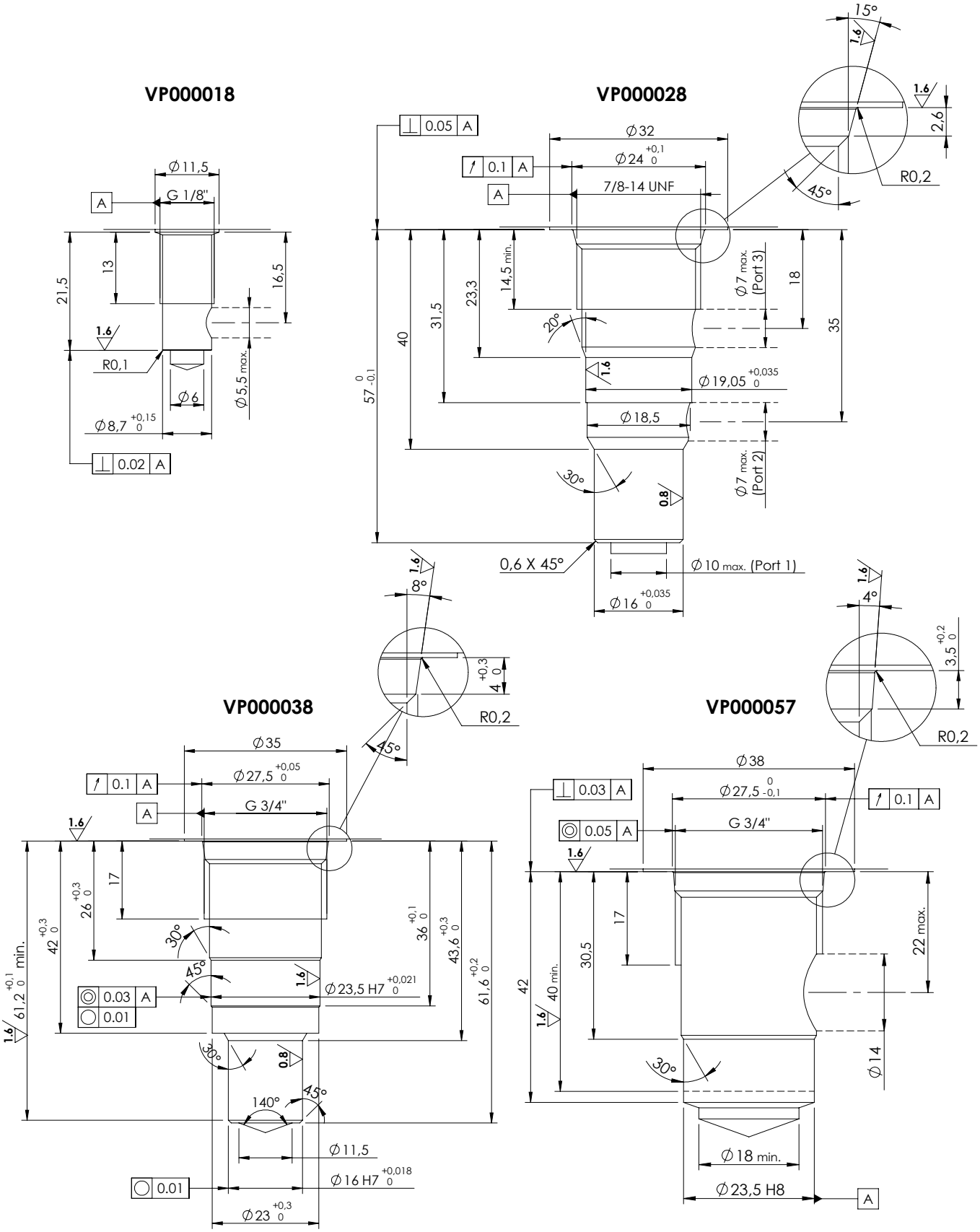

General Tolerances: ◎ 0.03 ⊥ 0.02

SPECIAL CAVITIES

ATLANTIC Fluid Tech

VP000058

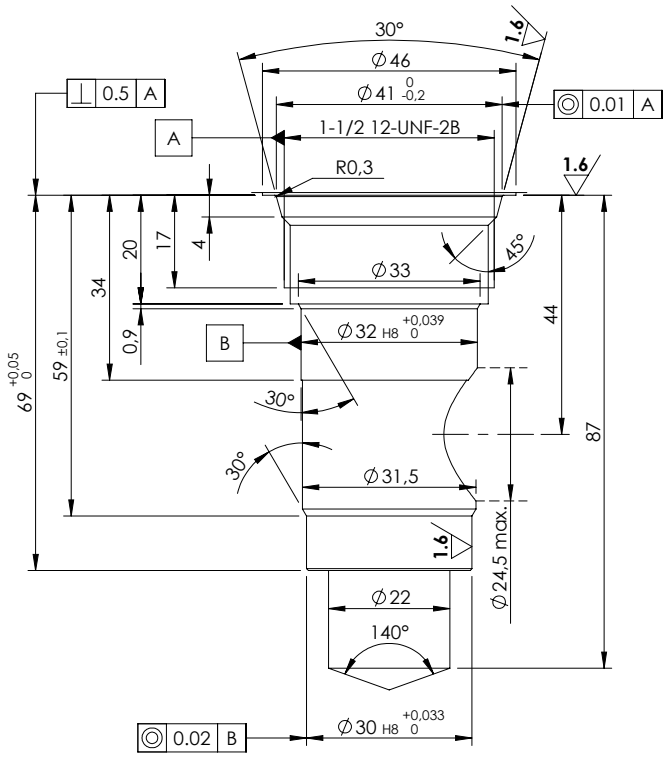

VP000070

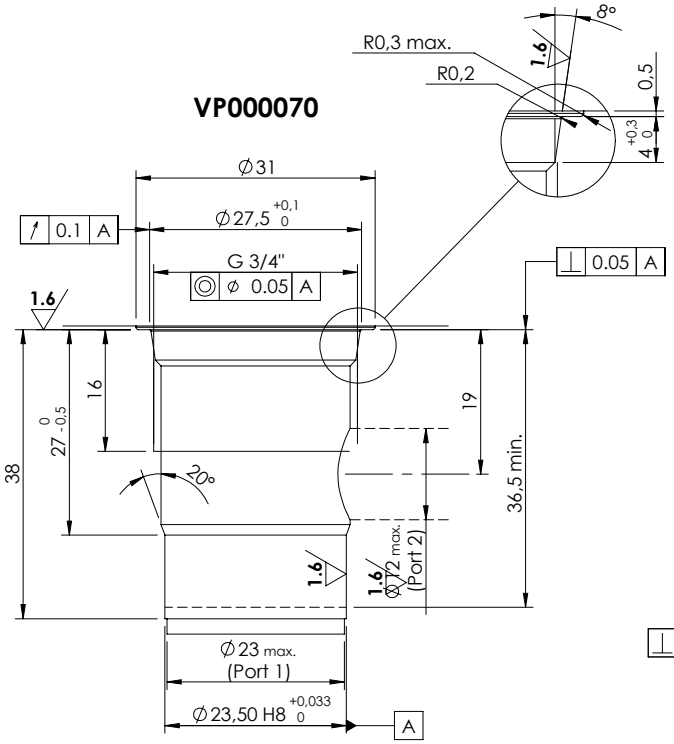

VP000079

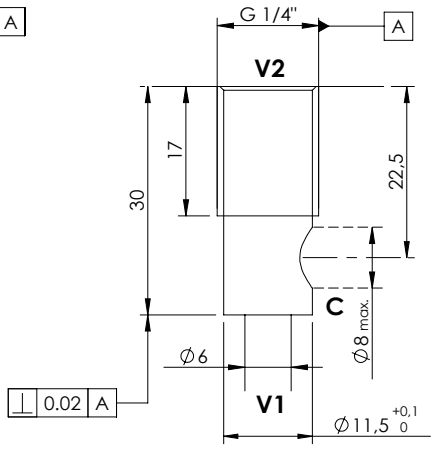

General Tolerances: ◎ 0.03 | ⊥ 0.02

SPECIAL CAVITIES

ATLANTIC Fluid Tech

VP000080

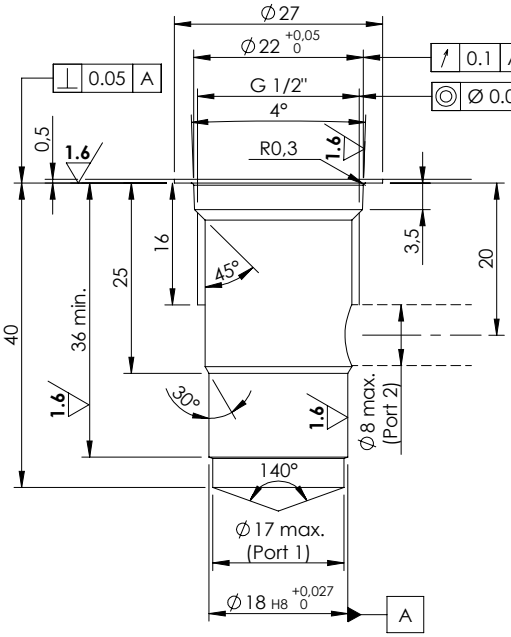

VP000086

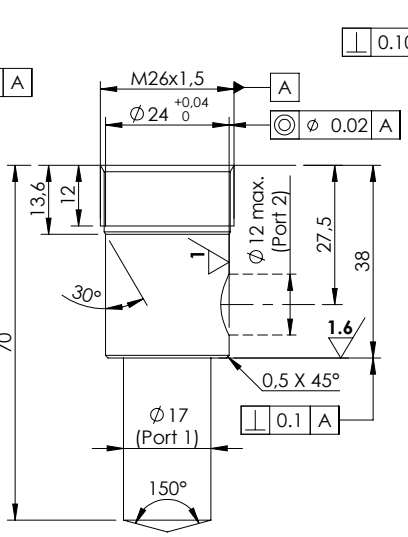

VP000096

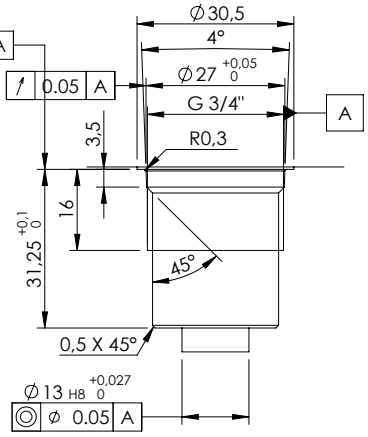

VP000098

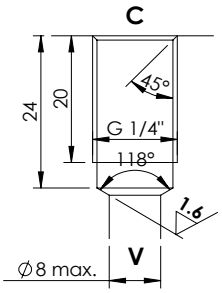

VP000120

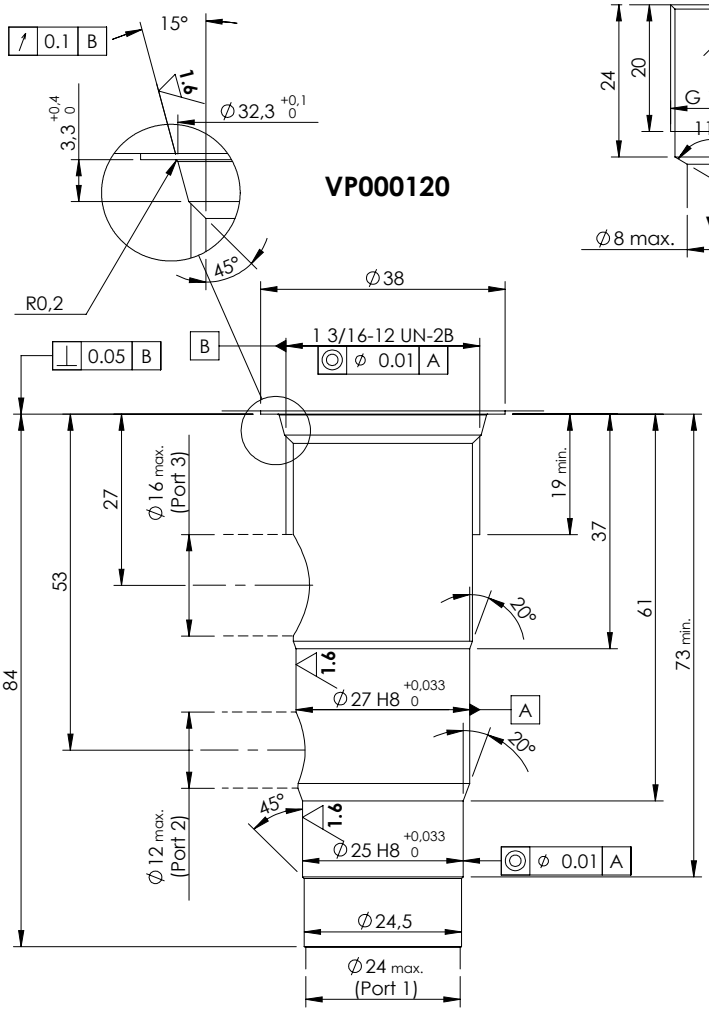

VP000121

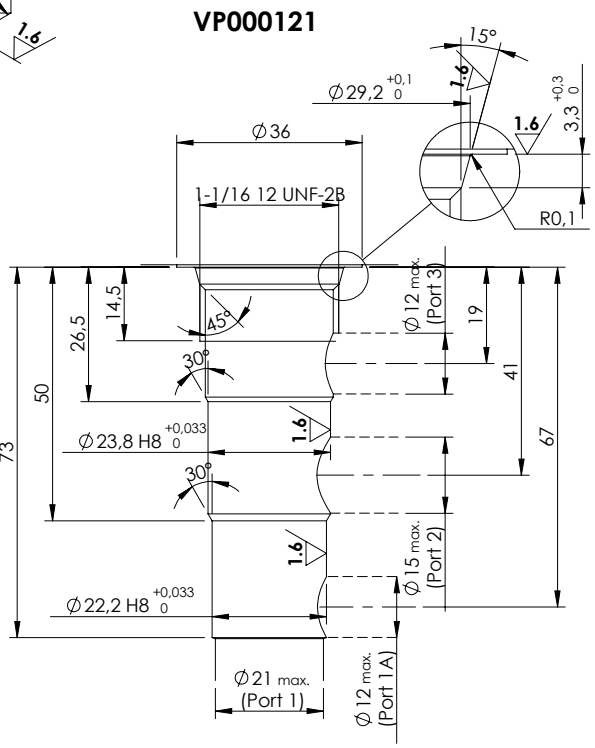

General Tolerances: ◎ 0.03 ⊥ 0.02

SPECIAL CAVITIES

ATLANTIC Fluid Tech

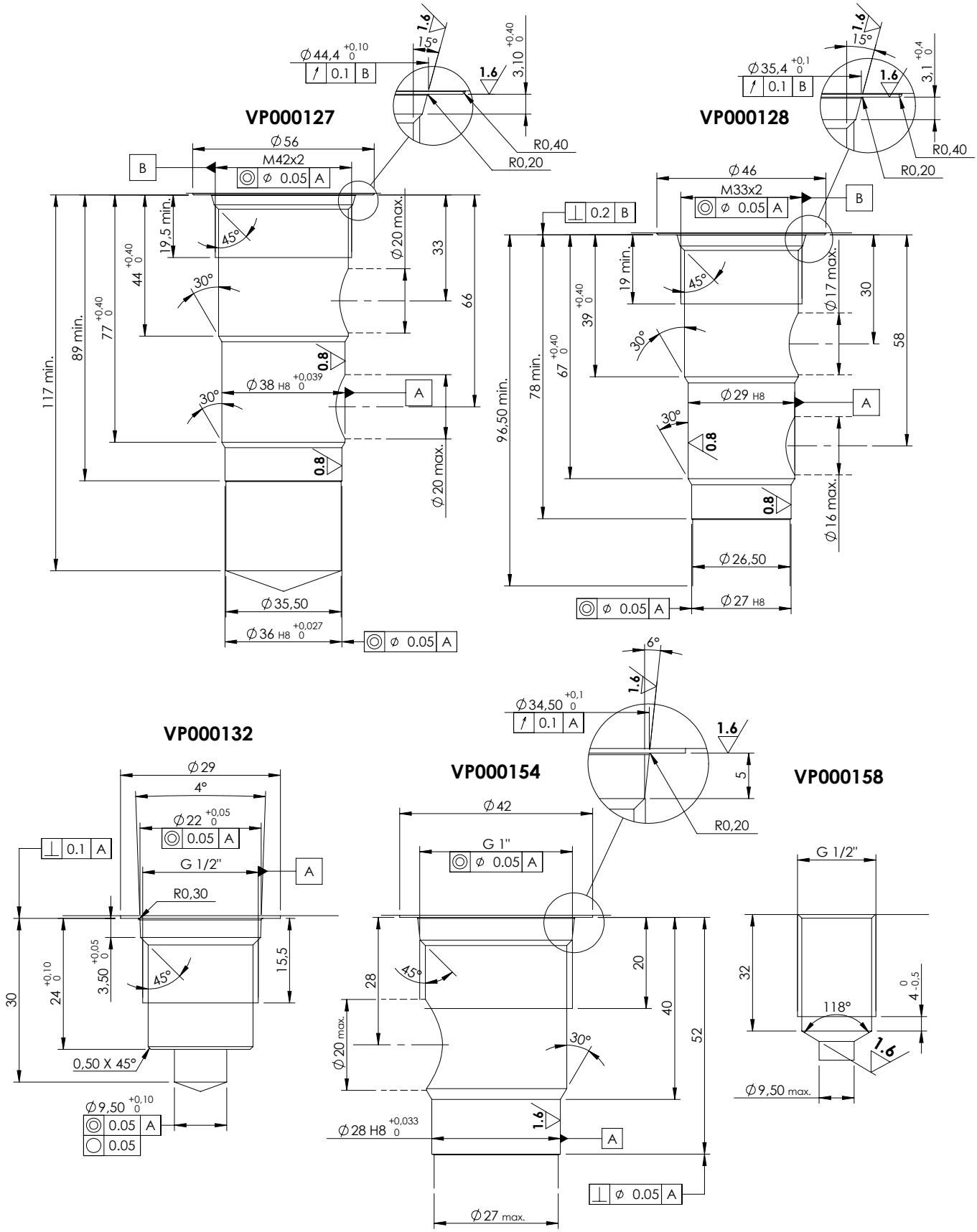

General Tolerances: ◎ 0.03 | ⊥ 0.02

SPECIAL CAVITIES

ATLANTIC Fluid Tech

VP000161 (T-11A 3)

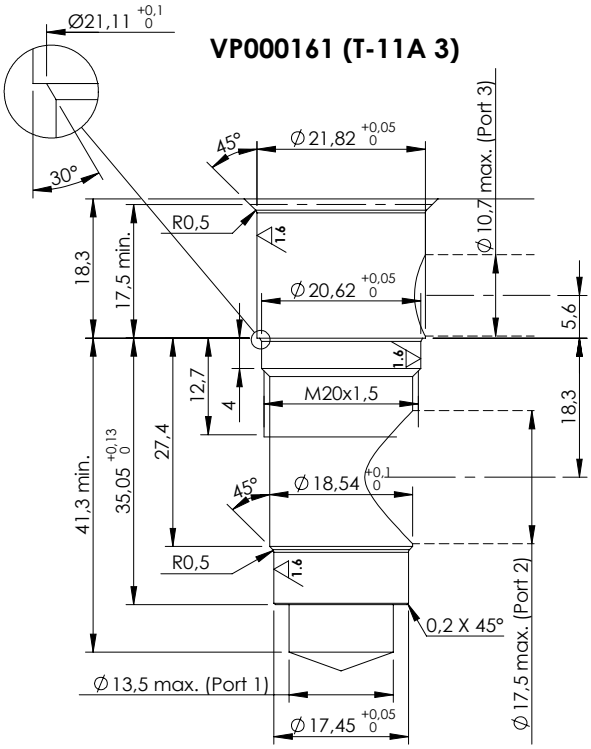

VP000165 (T-2A)

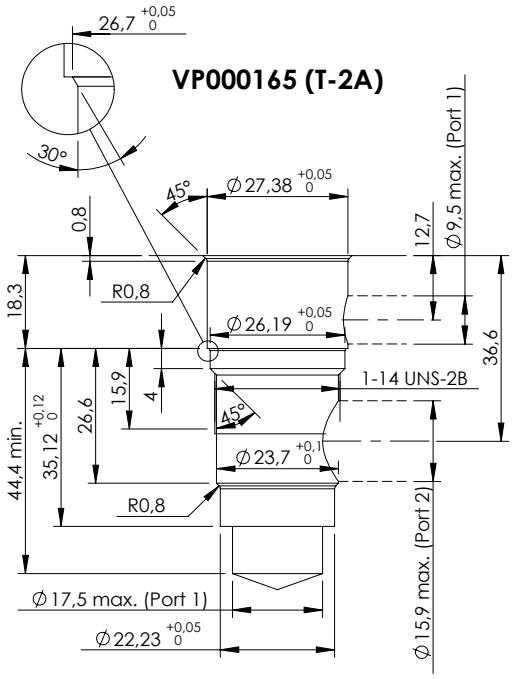

VP000166 (T-17A)

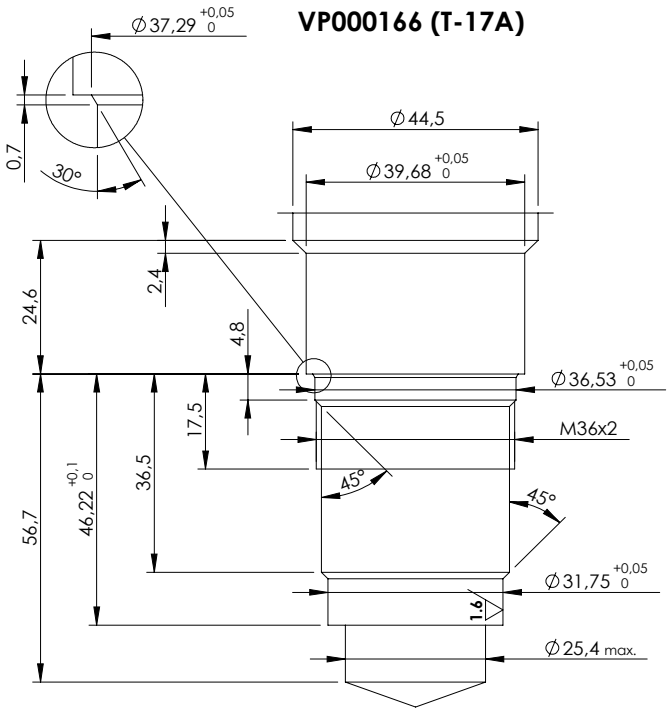

VP000174

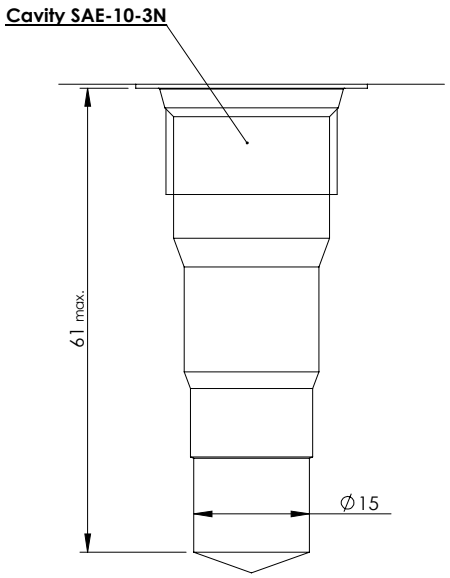

General Tolerances: ◎ 0.03 ⊥ 0.02

SPECIAL CAVITIES

ATLANTIC Fluid Tech

VP000178

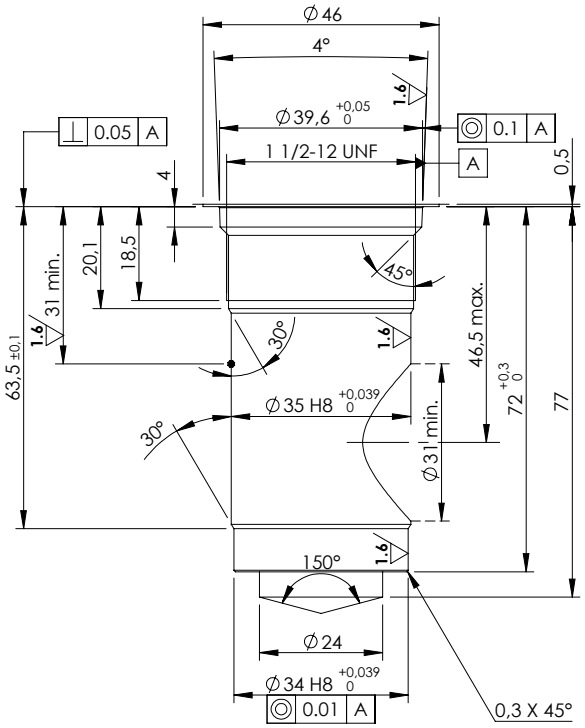

VP000180

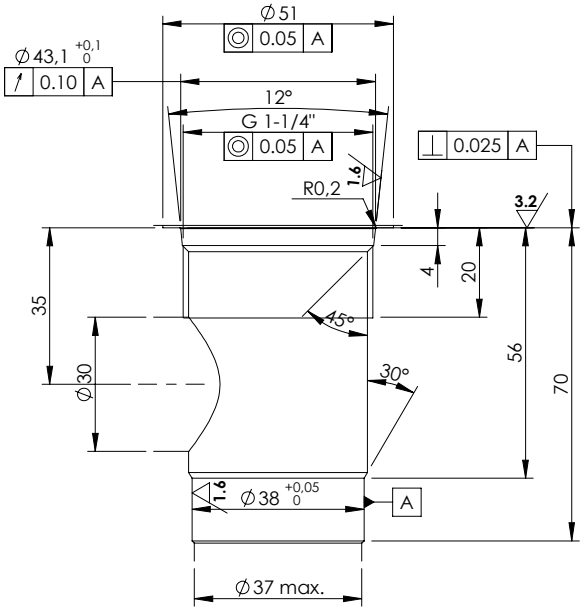

VP000193

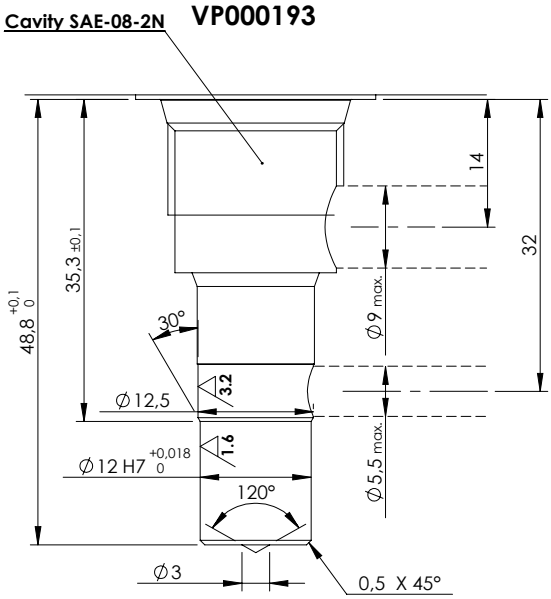

VP000198

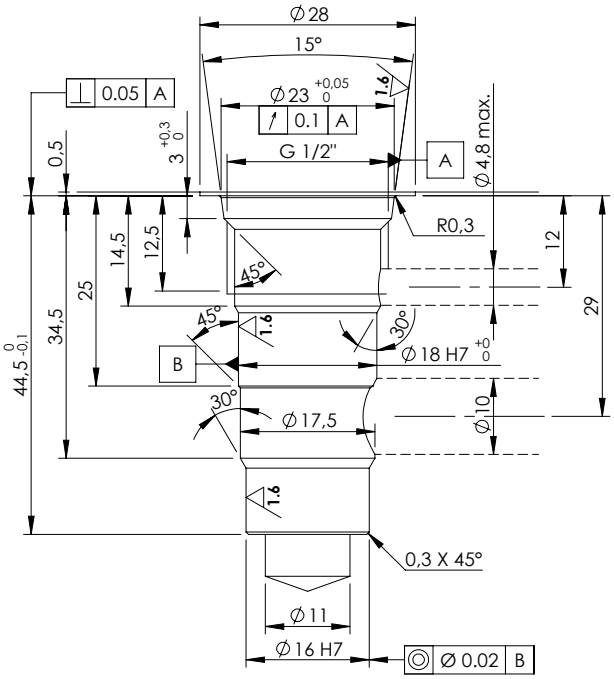

General Tolerances: ◎ 0.03 | ⊥ 0.02

SPECIAL CAVITIES

ATLANTIC Fluid Tech

VP000202

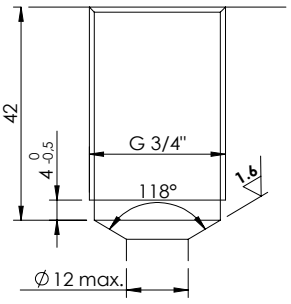

VP000204

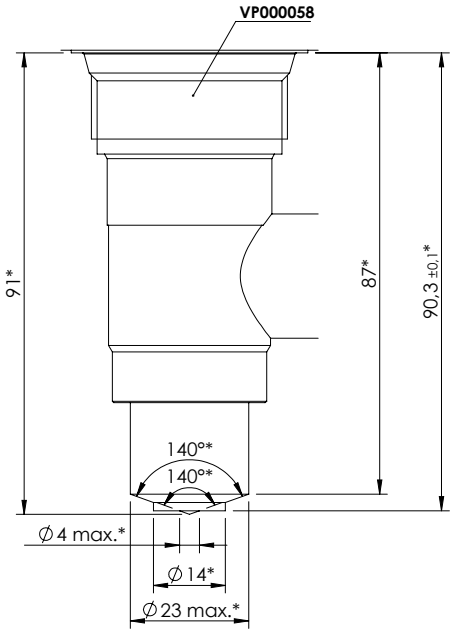

VP000216

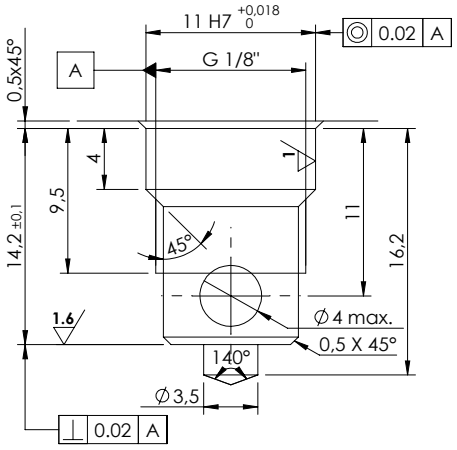

VP000249

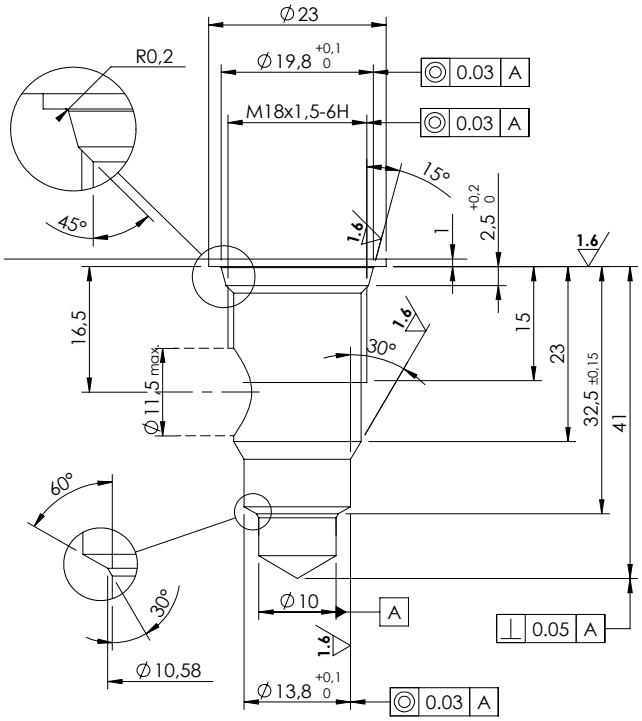

VP000250

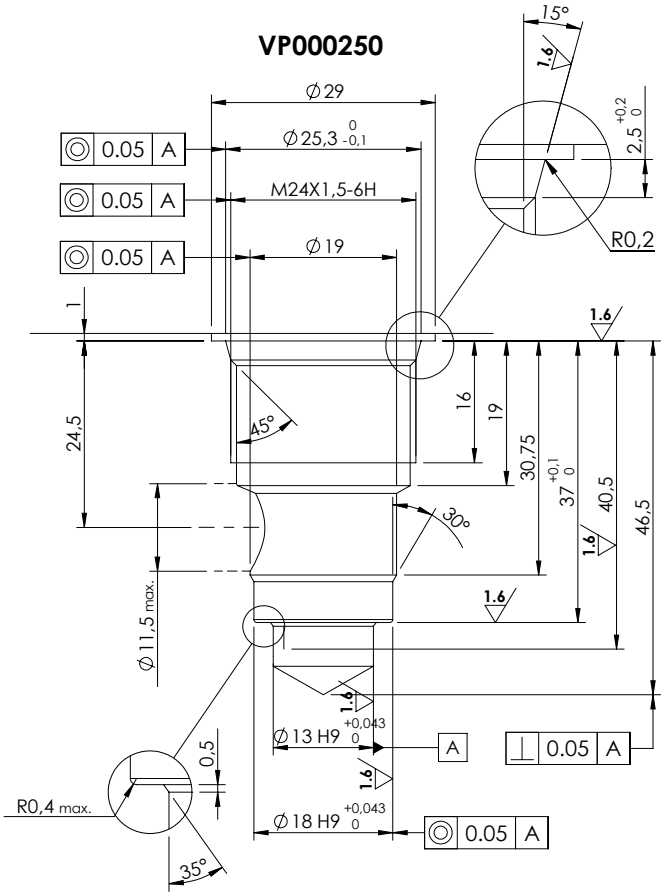

General Tolerances: ◎ 0.03 | ⊥ 0.02

SPECIAL CAVITIES

ATLANTIC Fluid Tech

VP000307

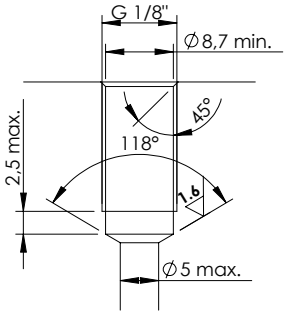

VP000309

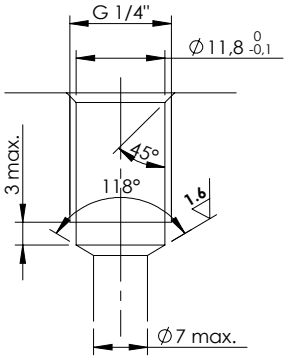

VP000310

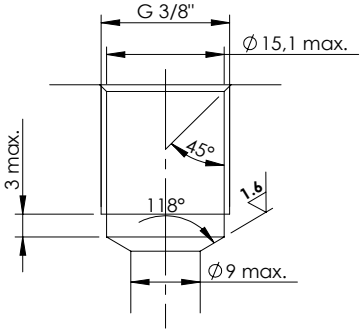

VP000311

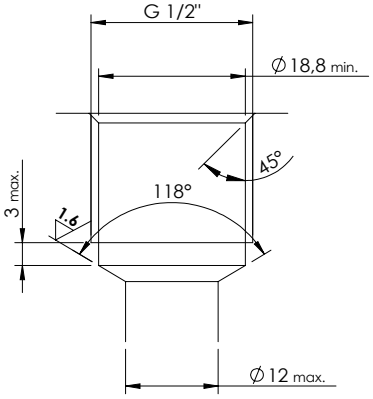

VP000312

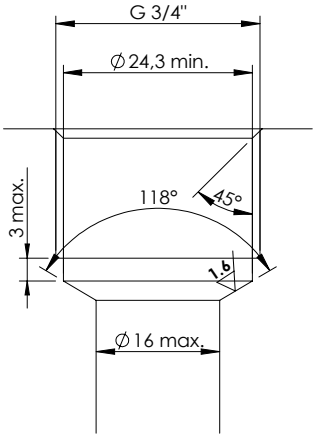

VP000314

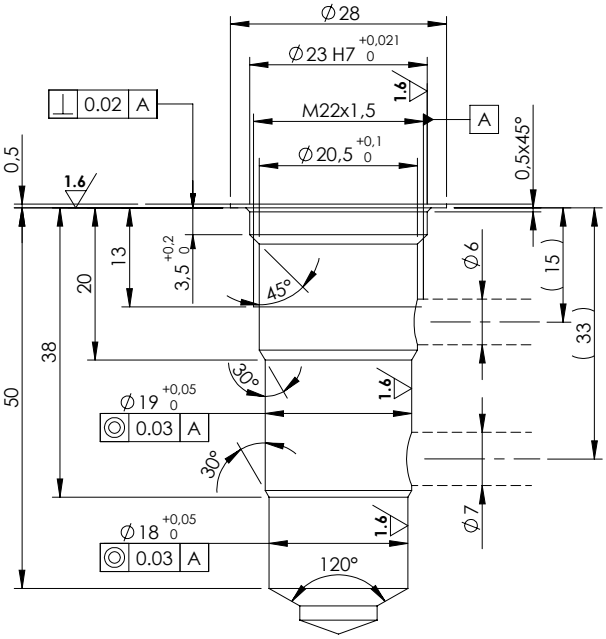

VP000330

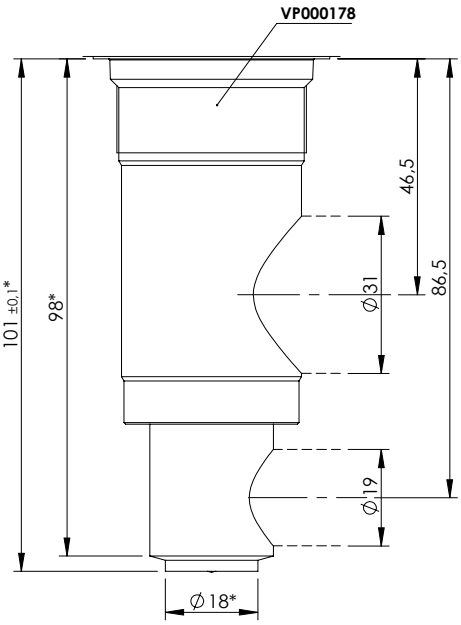

General Tolerances: ◎ 0.03 ⊥ 0.02

SPECIAL CAVITIES

ATLANTIC Fluid Tech

VP000338

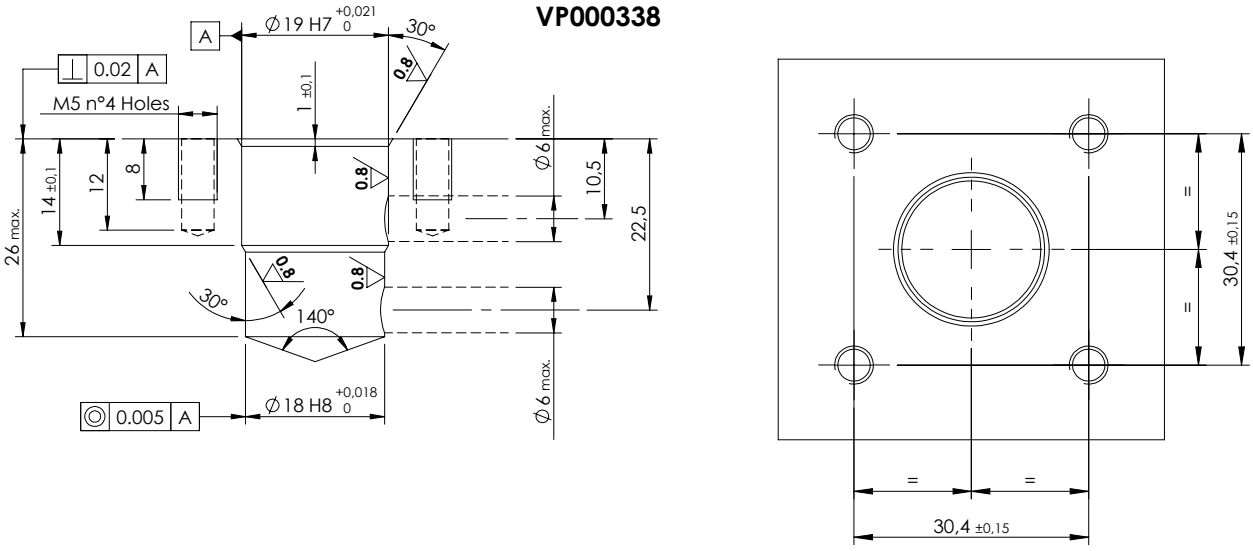

VP000371

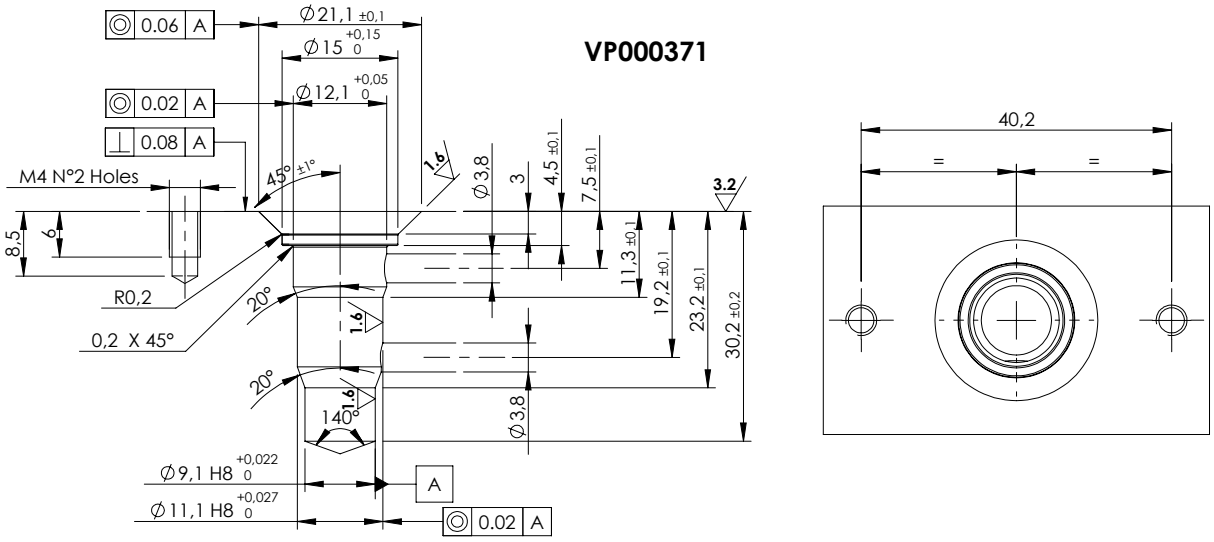

VP000388

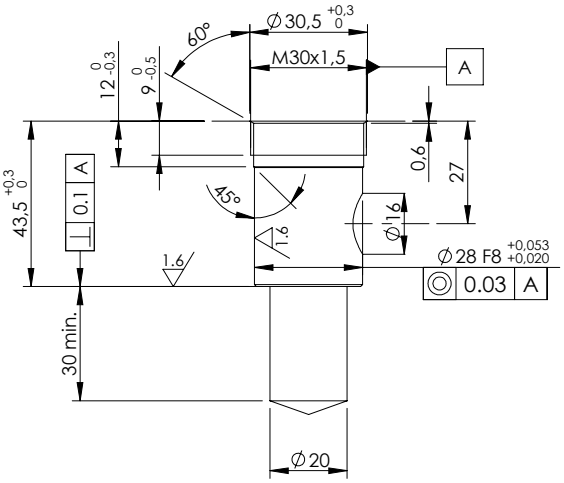

VP000445

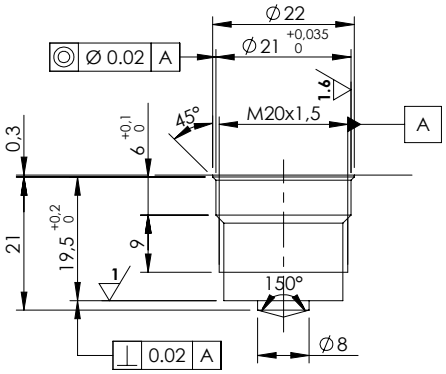

General Tolerances: ◎ 0.03 ⊥ 0.02

SPECIAL CAVITIES

ATLANTIC Fluid Tech

VP000555

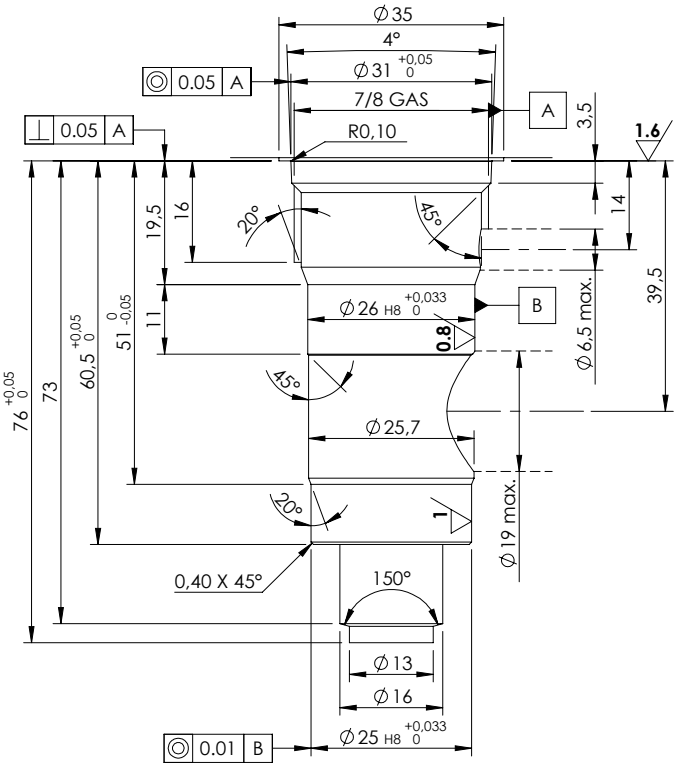

General Tolerances: ◎ 0.03 ⊥ 0.02

TECHNICAL DATA

SAE FLANGE

ATLANTIC Fluid Tech

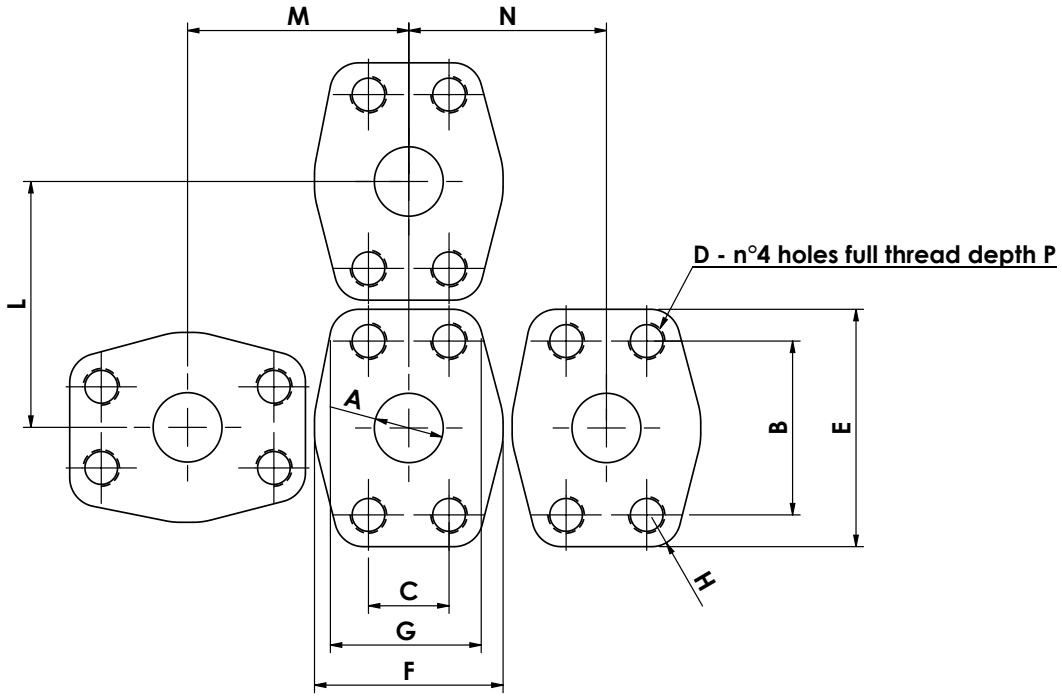

FLANGE SAE 3000 PSI (MEDIUM PRESSURE)

		1/2	3/4	1"	1" 1/4	1" 1/2
A	∅ max.	13	19	25,5	32	38
B	-	38,1	47,6	52,4	58,7	69,9
C	-	17,5	22,2	26,2	30,2	35,7
D	unc-2B	5/16-18	3/8-16	3/8-16	7/16-14	1/2-13
	metric	M8	M10	M10	M10	M12
E	-	54	65	70	79	94
F	-	46	52	59	73	83
G	min.	33	41	48	54	64
H	radius	8	9	9	10	12
L	min.	56	68	72	82	96
M	min.	52	61	67	78	90
N	min.	49	55	61	75	85
P	min. mm	24	22	22	28	27

FLANGE SAE 6000 PSI (HIGH PRESSURE)

		1/2	3/4	1"	1" 1/4	1" 1/2
A	∅ max.	13	19	25,5	32	38
B	-	40,50	50,80	57,2	66,7	79,4
C	-	18,2	23,80	27,8	31,80	36,50
D	unc-2B	5/16-18	3/8-16	7/16-14	1/2-13	5/8-11
	metric	M8	M10	M12	M14	M16
E	-	56	71	81	95	113
F	-	48	60	70	78	95
G	min.	38	48	54	60	70
H	radius	8	10	12	14	17
L	min.	59	75	84	99	116
M	min.	56	70	80	90	108
N	min.	53	66	75	83	101
P	min. mm	21	24	27	25	35

ATLANTIC
Fluid Tech

SECTION 3

Sequence Valves

MANAGEMENT SYSTEM CERTIFICATION
DNV·GL
ISO 9001 = ISO 14001
OHSAS 18001

SEQUENCE VALVES

ATLANTIC Fluid Tech

Hydraulic scheme	Valve description	Valve type	Rated flow (l/min)	Max. pressure (bar)	Installation	Main port size or cavity type	Page
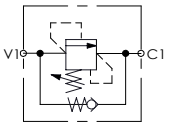	KPSN-030-DPNA	Direct acting, stabilized piston, not compensated	30	350	In line	G3/8"	3.01.**010**
	KPSN-030-DPNA	Direct acting, stabilized piston, not compensated	30	350	In line	G1/2"	3.01.**020**
	CPSN-060-DPGD	Direct acting, with anti-cavitation	60	420	Sleve	G3/8"	3.01.**030**
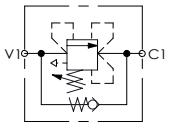	KPST-030-DPNA	Direct acting, stabilized piston, compensated	30	350	In line	G3/8"	3.02.**040**
	KPST-030-DPNA	Direct acting, stabilized piston, compensated	30	350	In line	G1/2"	3.02.**050**
	CPST-060-DHLD	Differential, compensated	60	350	Sleve	G3/8"	3.02.**060**
	CPST-100-DHLD	Differential, compensated	100	350	Sleve	G1/2"	3.02.**070**
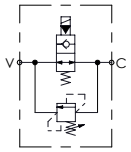	KPEN-020-DPLD	Direct acting, solenoid by-pass	20	350	In line	G1/4"	3.03.**080**

SEQUENCE VALVE IN BODY

KPSN-030-DPNA

DIRECT ACTING
STABILIZED PISTON
NOT COMPENSATED

ATLANTIC Fluid Tech

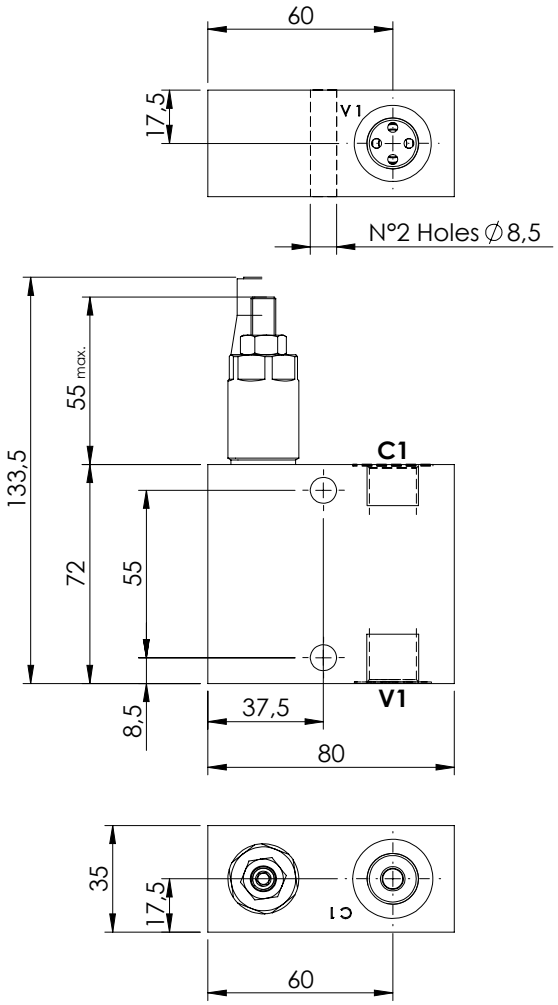

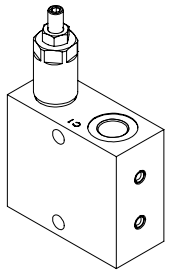

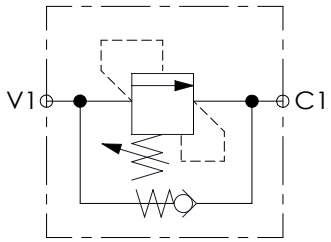

SPECIFICATIONS

Max. operating pressure:	**350 bar**
Rated flow:	**30 l/min**
Manifold:	**Aluminium**
Weight:	**0,65 kg**

SEALING CAP

Ordering code:

AT000020

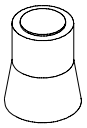

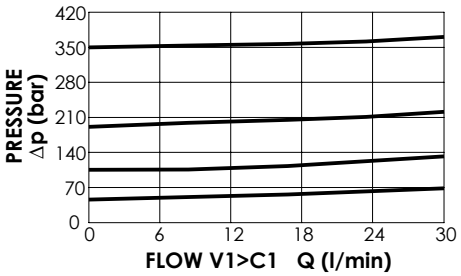

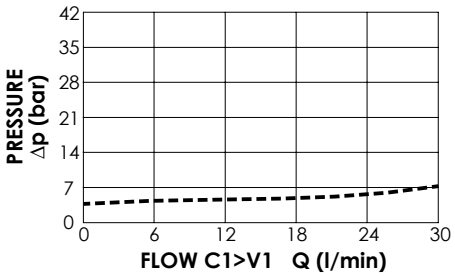

ORDERING CODES

Quick code	Description	Main ports size	Standard setting (bar, Q=5 l/min)	Adjustm. range (bar)	Pressure increase (bar/turn)
KP000036	**KPSN-030-DPNA-HN-G38-N350**	C1, V1: **G 3/8"**	**350**	**100-350**	**91**
KP000033	**KPSN-030-DPNA-HN-G38-N200**	C1, V1: **G 3/8"**	**200**	**50-210**	**42**
KP000035	**KPSN-030-DPNA-HN-G38-N100**	C1, V1: **G 3/8"**	**100**	**30-100**	**20**
KP000034	**KPSN-030-DPNA-HN-G38-N050**	C1, V1: **G 3/8"**	**50**	**10-50**	**10**

SEQUENCE VALVE IN BODY

KPSN-030-DPNA

DIRECT ACTING
STABILIZED PISTON
NOT COMPENSATED

ATLANTIC Fluid Tech

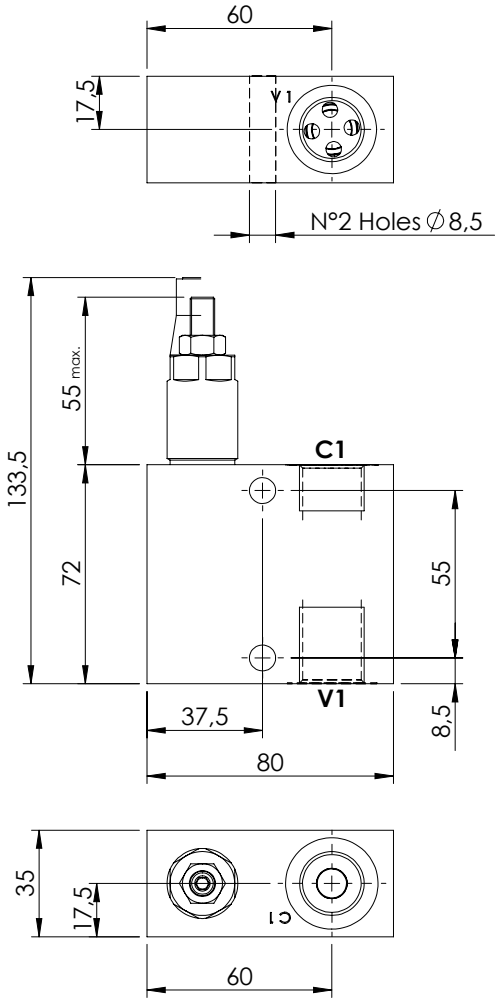

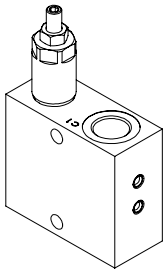

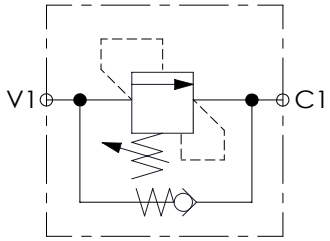

SPECIFICATIONS

Max. operating pressure:	**350 bar**
Rated flow:	**30 l/min**
Manifold:	**Aluminium**
Weight:	**0,64 kg**

SEALING CAP

Ordering code:
AT000020

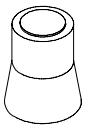

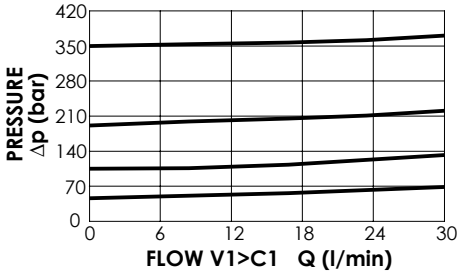

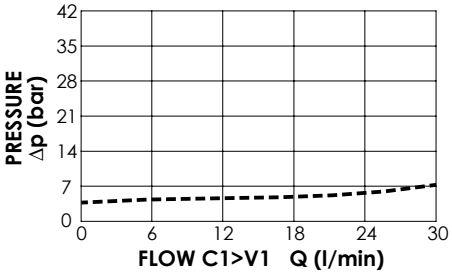

ORDERING CODES

Quick code	Description	Main ports size	Standard setting (bar, Q=5 l/min)	Adjustm. range (bar)	Pressure increase (bar/turn)
KP000061	**KPSN-030-DPNA-HN-G12-N350**	C1, V1: **G 1/2"**	**350**	**100-350**	**91**
KP000062	**KPSN-030-DPNA-HN-G12-N200**	C1, V1: **G 1/2"**	**200**	**50-210**	**42**
KP000060	**KPSN-030-DPNA-HN-G12-N100**	C1, V1: **G 1/2"**	**100**	**30-100**	**20**
KP000063	**KPSN-030-DPNA-HN-G12-N050**	C1, V1: **G 1/2"**	**50**	**10-50**	**10**

SEQUENCE SLEEVE VALVE

CPSN-060-DPGD

DIRECT ACTING WITH ANTI-CAVITATION POPPET TYPE

ATLANTIC Fluid Tech

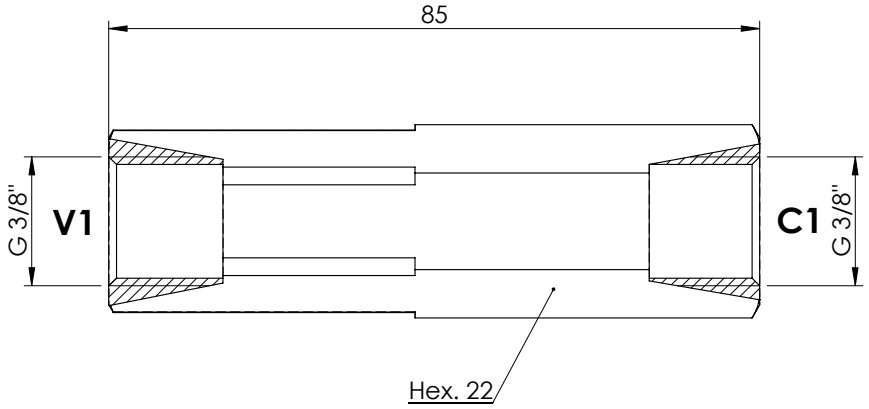

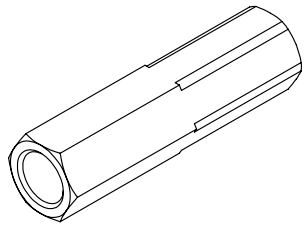

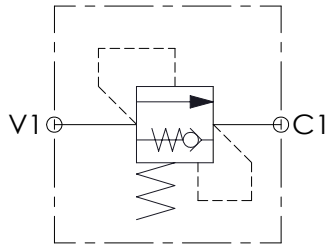

SPECIFICATIONS

Max. operating pressure:	350 bar
Rated flow:	60 l/min
Ports:	G 3/8"
Weight:	0.19 kg
Leakage:	1 cm^3/min to 80% of nominal set point
Manifold:	Steel body

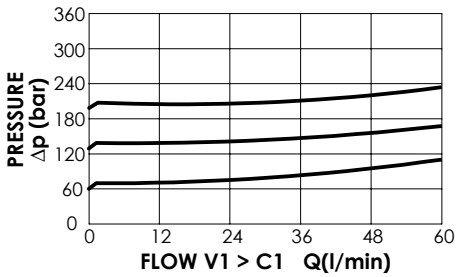

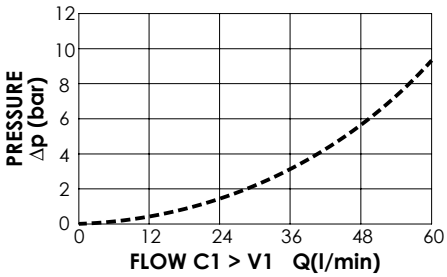

ORDERING CODES

Quick code	Spring range 20-70 bar setting (Q=1 l/min)	Quick code	Spring range 70-130 bar setting (Q=1 l/min)	Quick code	Spring range 130-210 bar setting (Q=1 l/min)
CP000194	20	CP000203	80	CP000210	140
CP000197	30	CP000204	90	CP000211	150
CP000198	40	CP000205	100	CP000212	160
CP000199	50	CP000206	110	CP000213	170
CP000200	60	CP000207	120	CP000214	180
CP000201	70	CP000208	130	CP000215	190
				CP000216	200
				CP000217	210

SEQUENCE VALVE IN BODY

KPST-030-DPNA

DIRECT ACTING STABILIZED PISTON COMPENSATED

ATLANTIC Fluid Tech

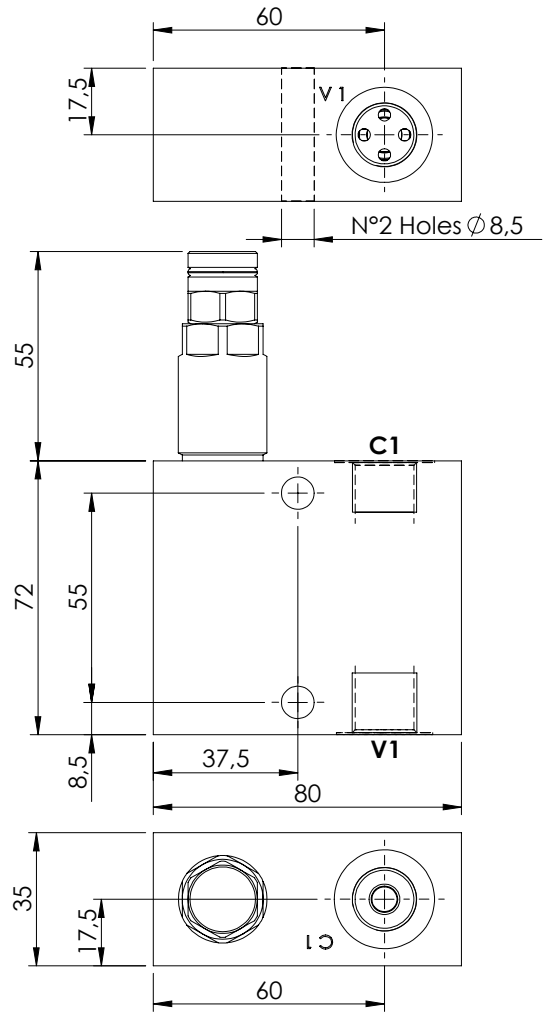

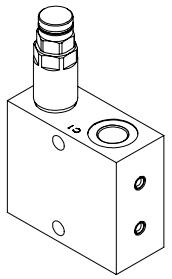

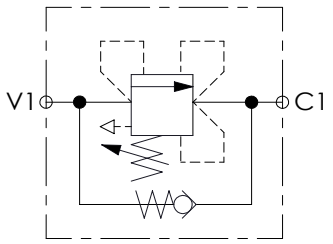

SPECIFICATIONS

Max. operating pressure:	**350 bar**
Rated flow:	**30 l/min**
Manifold:	**Aluminium**
Weight:	**0,67 kg**

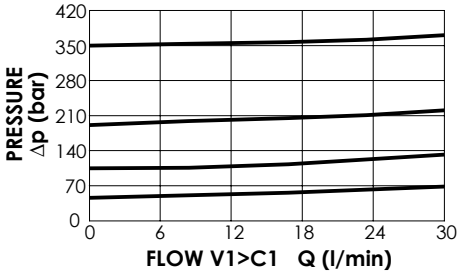

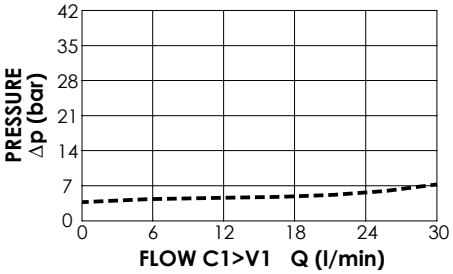

ORDERING CODES

Quick code	Description	Main ports size	Standard setting (bar, Q=5 l/min)	Adjustm. range (bar)	Pressure increase (bar/turn)
KP000079	**KPST-030-DPNA-HN-G38-N350**	C1, V1: **G 3/8"**	**350**	**100-350**	**91**
KP000080	**KPST-030-DPNA-HN-G38-N200**	C1, V1: **G 3/8"**	**200**	**50-210**	**42**
KP000081	**KPST-030-DPNA-HN-G38-N100**	C1, V1: **G 3/8"**	**100**	**30-100**	**20**
KP000082	**KPST-030-DPNA-HN-G38-N050**	C1, V1: **G 3/8"**	**50**	**10-50**	**10**

SEQUENCE VALVE IN BODY

KPST-030-DPNA

DIRECT ACTING STABILIZED PISTON COMPENSATED

ATLANTIC Fluid Tech

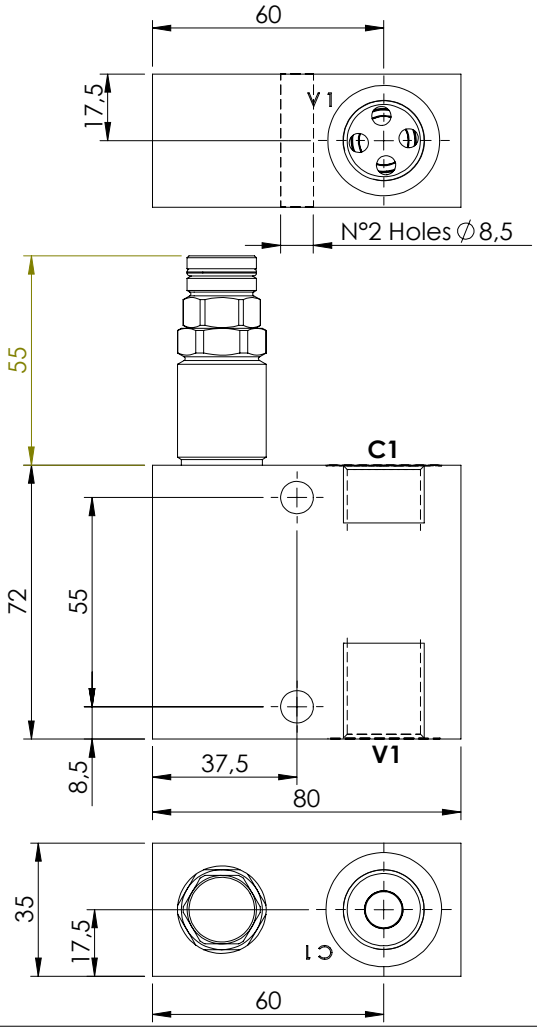

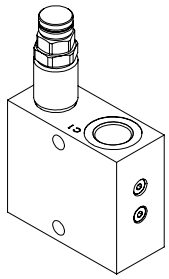

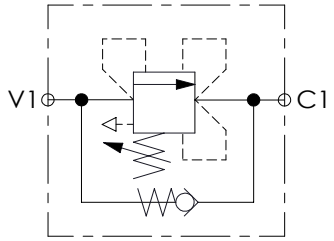

SPECIFICATIONS

Max. operating pressure:	350 bar
Rated flow:	30 l/min
Manifold:	Aluminium
Weight:	0,67 kg

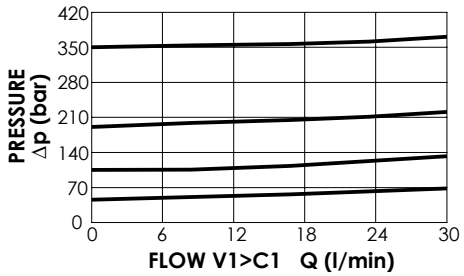

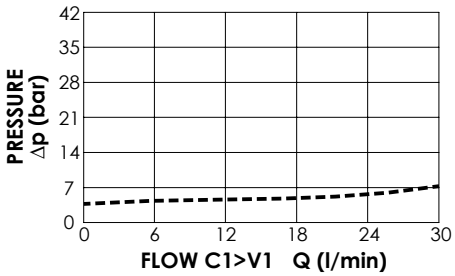

ORDERING CODES

Quick code	Description	Main ports size	Standard setting (bar, Q=5 l/min)	Adjustm. range (bar)	Pressure increase (bar/turn)
KP000083	KPST-030-DPNA-HN-G12-N350	C1,V1 : **G 1/2"**	350	100-350	91
KP000084	KPST-030-DPNA-HN-G12-N200	C1,V1 : **G 1/2"**	200	50-210	42
KP000085	KPST-030-DPNA-HN-G12-N100	C1,V1 : **G 1/2"**	100	30-100	20
KP000086	KPST-030-DPNA-HN-G12-N050	C1,V1 : **G 1/2"**	50	5-50	10

SEQUENCE VALVE

CPST-060-DHLD

DIFFERENTIAL AREA COMPENSATED

ATLANTIC Fluid Tech

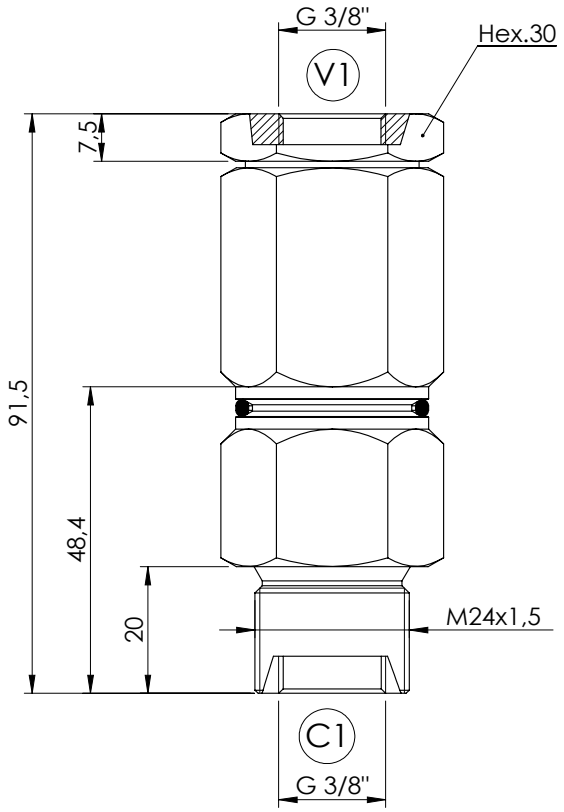

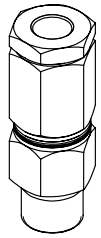

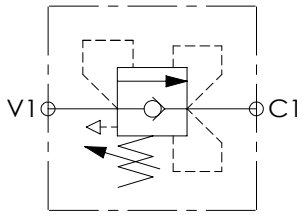

SPECIFICATIONS

Max. operating pressure:	**350 bar**
Rated flow:	**60 l/min**
Body:	**Steel**
Weight:	**0,39 kg**

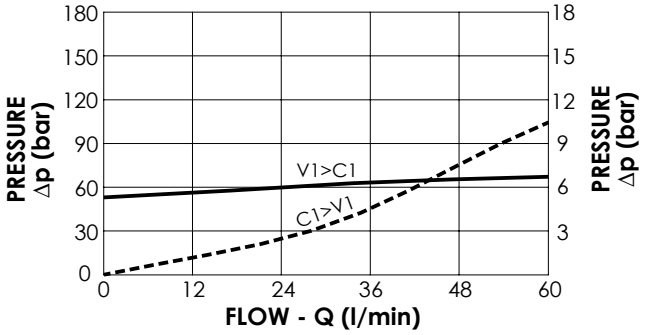

ORDERING CODES

Quick code	Description	Port size	Standard setting (bar, Q=5 l/min)	Adjust. range (bar)	Pressure increase (bar/turn)
CP000091	**CPST-060-DHLD-GN-G38-N100**	V1,C1 : **G 3/8"**	**100**	**50-140**	**26**
CP000435	**CPST-060-DHLD-GN-G38-N120**	V1,C1 : **G 3/8"**	**120**	**50-140**	**26**

SEQUENCE VALVE

CPST-100-DHLD

DIFFERENTIAL AREA POPPET TYPE COMPENSATED

ATLANTIC Fluid Tech

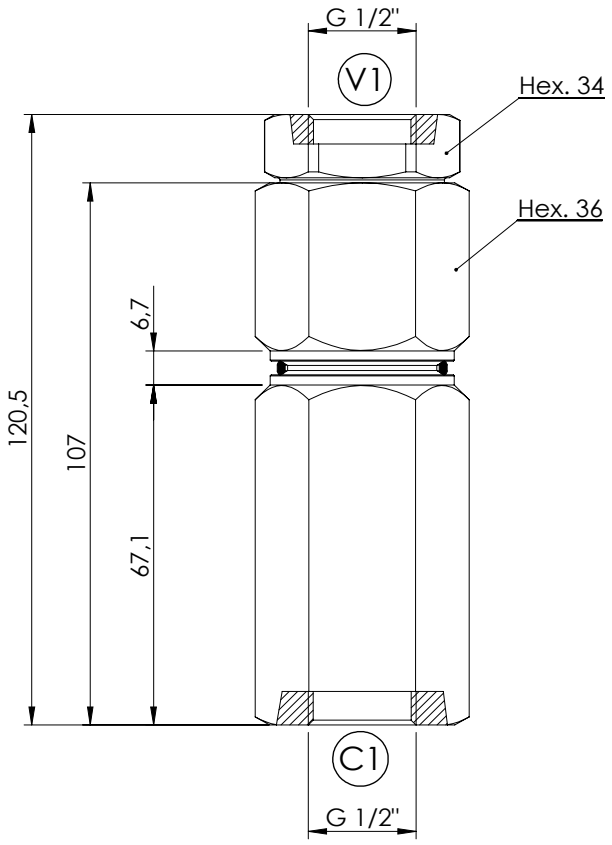

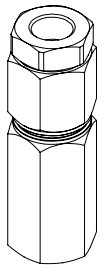

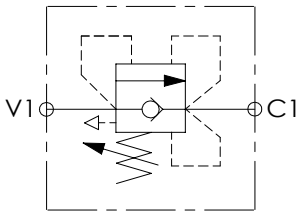

SPECIFICATIONS

Max. operating pressure:	**350 bar**
Rated flow:	**100 l/min**
Body:	**Steel**
Weight:	**0,82 kg**

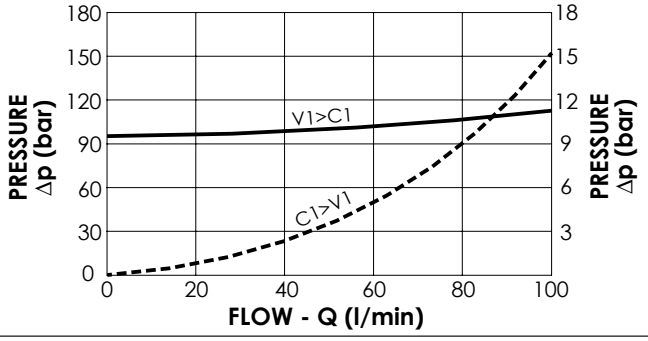

ORDERING CODES

Quick code	Description	Port size	Standard setting (bar, Q=5 l/min)	Adjust. range (bar)	Pressure increase (bar/turn)
CP000092	**CPST-100-DHLD-GN-G12-N140**	V1,C1: **G1/2"**	**100**	**50 - 140**	**27**
CP000269	**CPST-100-DHLD-GN-G12-N220**	V1,C1: **G1/2"**	**200**	**100 - 220**	**39**

SEQUENCE VALVE

KPEN-020-DPLD

DIRECT ACTING SOLENOID BY-PASS

ATLANTIC Fluid Tech

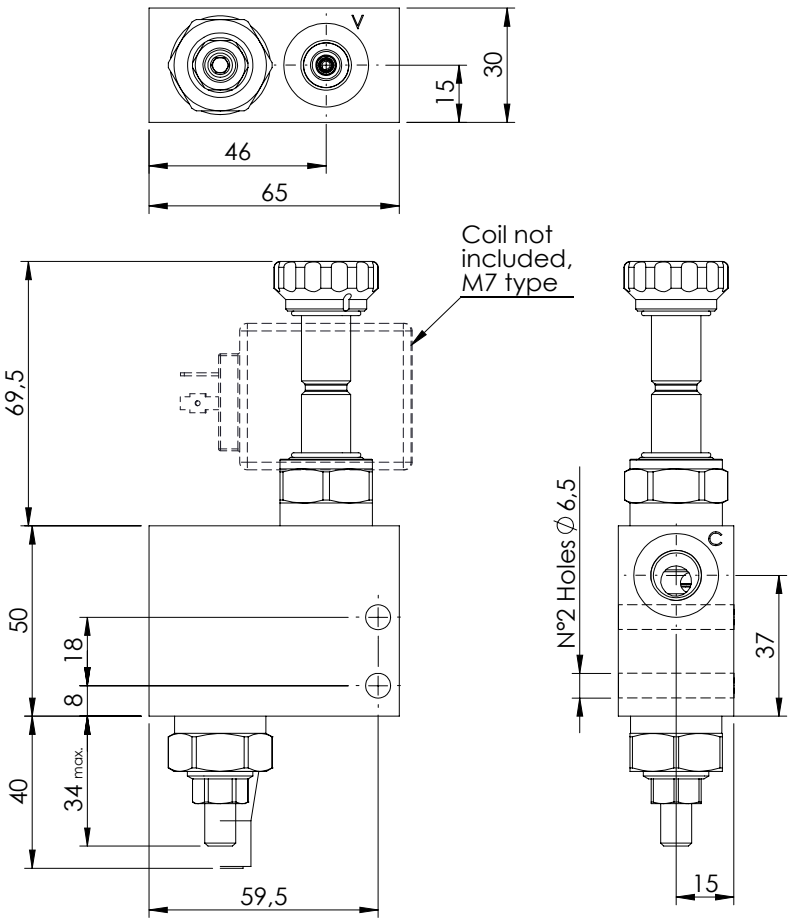

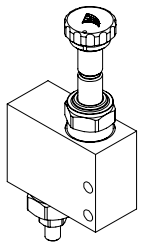

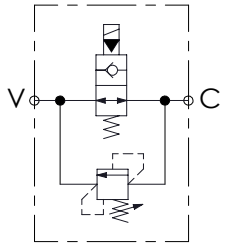

SPECIFICATIONS

Max. operating pressure:	350 bar
Rated flow:	20 l/min
Manifold:	Steel
Weight:	0,83 kg

SEALING CAP

Ordering code:

AT000020

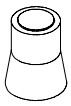

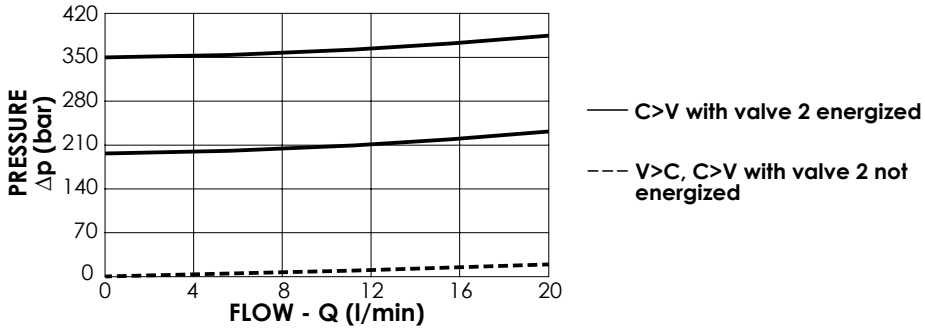

ORDERING CODES

Quick code	Description	Main ports size	Standard setting (bar, Q=5 l/min)	Adjustm. range (bar)	Pressure increase (bar/turn)
KP000109	KPEN-020-DPLD-SN-G14-N350	G 1/4"	350	175-350	177
KP000110	KPEN-020-DPLD-SN-G14-N210	G 1/4"	200	105-210	80

ATLANTIC
Fluid Tech

SECTION 4

Check Valves

MANAGEMENT SYSTEM CERTIFICATION
DNV·GL
ISO 9001 = ISO 14001
OHSAS 18001

CHECK VALVES

ATLANTIC Fluid Tech

Hydraulic scheme	Valve description	Valve type	Rated flow (l/min)	Max. pressure (bar)	Installation	Main port size or cavity type	Page
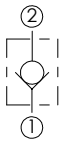	CDVN-010-SSNS	Sphere type	10	350	Cartridge	VP000216	4.01.**010**
	CDVN-030-PSNR	Poppet type	30	350	Cartridge	VP000015	4.01.**020**
	CDVN-050-PSNR	Poppet type	50	350	Cartridge	SAE-08-2N	4.01.**030**
	CDVN-060-PSNR	Poppet type	60	350	Cartridge	VP000006	4.01.**040**
	CDVN-080-PSNR	Poppet type	80	350	Cartridge	SAE-10-2N	4.01.**050**
	CDVN-120-PSNR	Poppet type	120	350	Cartridge	SAE-12-2N	4.01.**060**
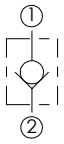	CDVN-010-PAGS	Poppet type, monodirectional	10	350	Cartridge	G 1/8"	4.02.**070**
	CDVN-020-PAGS	Poppet type, monodirectional	20	350	Cartridge	G 1/4"	4.02.**070**
	CDVN-050-PAGS	Poppet type, monodirectional	50	350	Cartridge	G 3/8"	4.02.**070**
	CDVN-080-PAGS	Poppet type, monodirectional	80	350	Cartridge	G 1/2"	4.02.**070**
	CDVN-120-PAGS	Poppet type, monodirectional	120	350	Cartridge	G 3/4"	4.02.**070**
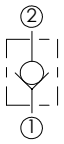	CDVN-010-PANS	Poppet type, monodirectional	10	350	Cartridge	G 1/8"	4.01.**080**
	CDVN-020-PANS	Poppet type, monodirectional	20	350	Cartridge	G 1/4"	4.01.**080**
	CDVN-050-PANS	Poppet type, monodirectional	50	350	Cartridge	G 3/8"	4.01.**080**
	CDVN-080-PANS	Poppet type, monodirectional	80	350	Cartridge	G 1/2"	4.01.**080**
	CDVN-120-PANS	Poppet type, monodirectional	120	350	Cartridge	G 3/4"	4.01.**080**
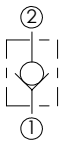	CDVN-015-SSNS	Sphere type, bidirectional	15	350	Insert	G 1/4"	4.01.**090**
	CDVN-030-SSNS	Sphere type, bidirectional	30	350	Insert	G 3/8"	4.01.**100**
	CDVN-050-SSNS	Sphere type, bidirectional	50	350	Insert	G 1/2"	4.01.**110**
	CDVN-070-PSNS	Sphere type, bidirectional	70	350	Insert	G1/2"	4.01.**120**
	CDVN-120-PSNS	Sphere type, bidirectional	120	350	Insert	G3/4"	4.01.**130**
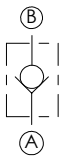	CDVN-030-PSNP-MF	Poppet type	30	350	Sleeve	G1/4"	4.03.**140**
	CDVN-050-PSNP-MF	Poppet type	50	350	Sleeve	G3/8"	4.03.**140**
	CDVN-090-PSNP-MF	Poppet type	90	350	Sleeve	G1/2"	4.03.**140**
	CDVN-150-PSNP-MF	Poppet type	150	350	Sleeve	G3/4"	4.03.**140**
	CDVN-200-PSNP-MF	Poppet type	200	350	Sleeve	G1"	4.03.**140**
	CDVN-250-PSNP-MF	Poppet type	250	350	Sleeve	G1"1/4	4.03.**140**
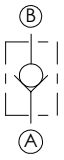	CDVN-030-PSNP-FF	Poppet type	30	350	Sleeve	G1/4"	4.03.**150**
	CDVN-050-PSNP-FF	Poppet type	50	350	Sleeve	G3/8"	4.03.**150**
	CDVN-090-PSNP-FF	Poppet type	90	350	Sleeve	G1/2"	4.03.**150**
	CDVN-150-PSNP-FF	Poppet type	150	350	Sleeve	G3/4"	4.03.**150**
	CDVN-200-PSNP-FF	Poppet type	200	350	Sleeve	G1"	4.03.**150**
	CDVN-250-PSNP-FF	Poppet type	250	350	Sleeve	G1"1/4	4.03.**150**
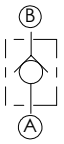	CDVN-010-DSNS	Disk type, bidirectional, not leak proof	10	350	Insert	G1/4"	4.04.**160**
	CDVN-030-DSNS	Disk type, bidirectional, not leak proof	30	350	Insert	G3/8"	4.04.**160**
	CDVN-070-DSNS	Disk type, bidirectional, not leak proof	70	350	Insert	G1/2"	4.04.**160**

CHECK VALVE

CDVN-010-SSNS

SPHERE TYPE

ATLANTIC Fluid Tech

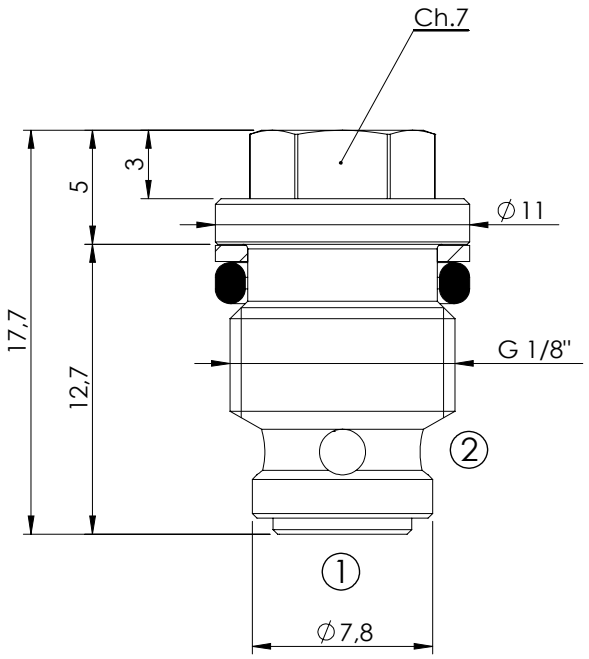

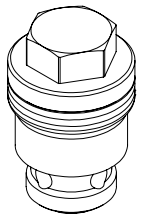

SPECIFICATIONS

Max. operating pressure:	350 bar
Rated flow:	10 l/min
Cavity:	VP000216
Weight:	0,01 kg

NOTES

Installation torque:	6.5 - 7 Nm
Seal kit:	RC700216

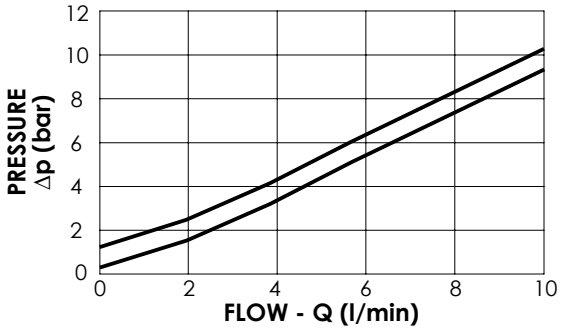

ORDERING CODES

Quick code	Description	Craking pressure (bar)	
CD000094	CDVN-010-SSNS-HN-216-N001	1,2	
CD000134	CDVN-010-SSNS-HN-216-N000	0,3	

CHECK VALVE

CDVN-030-PSNR

POPPET TYPE

ATLANTIC Fluid Tech

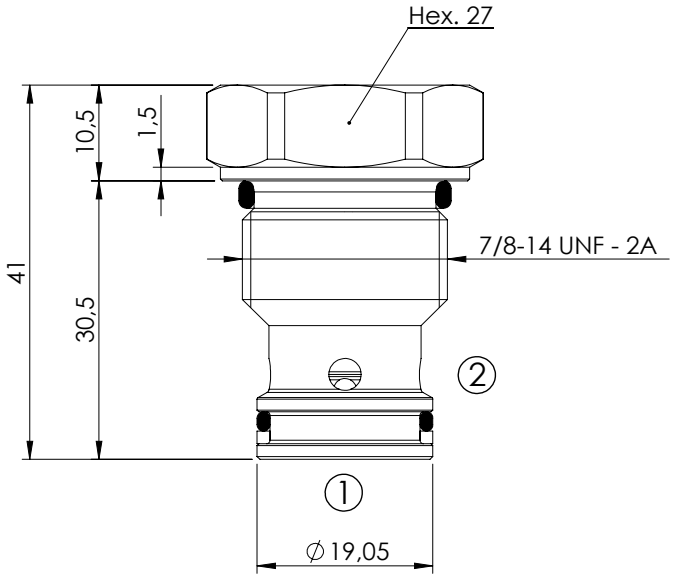

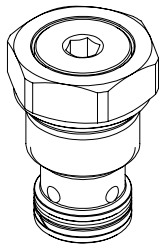

SPECIFICATIONS

Max. operating pressure:	420 bar
Rated flow:	30 l/min
Cavity:	VP000015
Weight:	0,11 kg

NOTES

Installation torque:	76 - 85 Nm
Seal kit:	RC700015

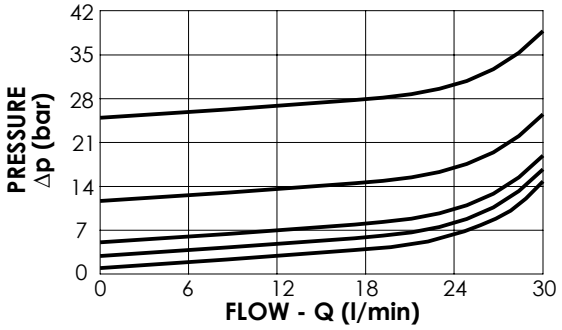

ORDERING CODES

Quick code	Description	Craking pressure (bar)	Hardened Seat	
CD000054	CDVN-030-PSNR-HN-015-N001	1	NO	
CD000302	CDVN-030-PANR-HN-015-N001	1	YES	
CD000195	CDVN-030-PSNR-HN-015-N003	3	NO	
CD000303	CDVN-030-PANR-HN-015-N003	3	YES	
CD000055	CDVN-030-PSNR-HN-015-N005	5	NO	
CD000304	CDVN-030-PANR-HN-015-N005	5	YES	
CD000056	CDVN-030-PSNR-HN-015-N009	9	NO	
CD000132	CDVN-030-PANR-HN-015-N009	9	YES	
CD000057	CDVN-030-PSNR-HN-015-N025	25	NO	
CD000063	CDVN-030-PANR-HN-015-N025	25	YES	

CHECK VALVE

CDVN-050-PSNR

POPPET TYPE

ATLANTIC Fluid Tech

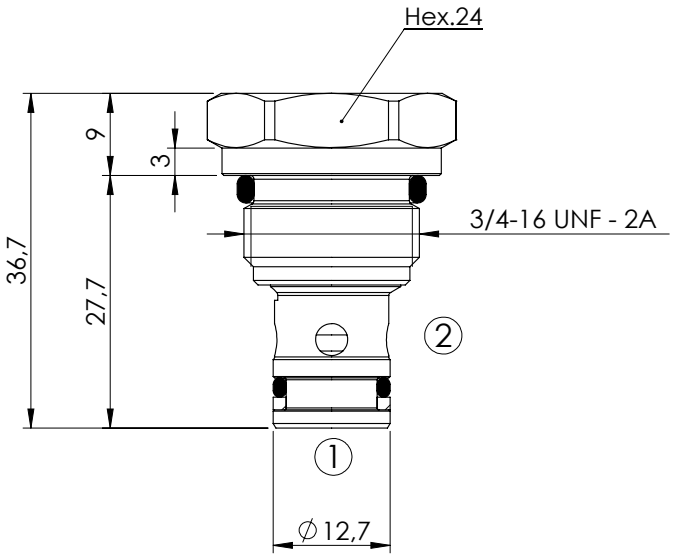

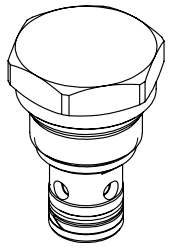

SPECIFICATIONS

Max. operating pressure:	**350 bar**
Rated flow:	**50 l/min**
Cavity:	**SAE-08-2N**
Weight:	**0,06 kg**

NOTES

Installation torque:	**45 - 50 Nm**
Seal kit:	**RA700081**

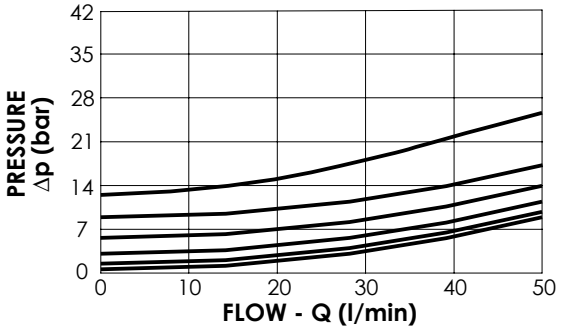

ORDERING CODES

Quick code	Description	Craking pressure (bar)	
CD000099	**CDVN-050-PSNR-FN-S08-N000**	**0,35**	
CD000024	**CDVN-050-PSNR-FN-S08-N001**	**1**	
CD000039	**CDVN-050-PSNR-FN-S08-N003**	**3**	
CD000269	**CDVN-050-PSNR-FN-S08-N006**	**6**	
CD000471	**CDVN-050-PSNR-FN-S08-N009**	**9,5**	
CD000070	**CDVN-050-PSNR-FN-S08-N013**	**13**	

CHECK VALVE

CDVN-060-PSNR

POPPET TYPE

ATLANTIC Fluid Tech

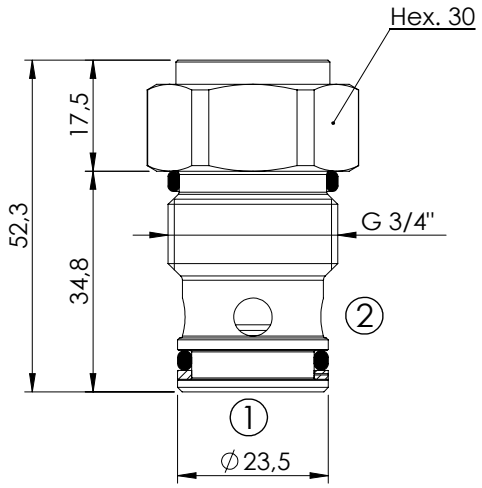

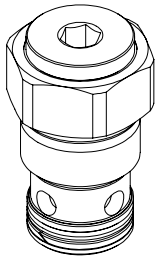

SPECIFICATIONS

Max. operating pressure:	350 bar
Rated flow:	60 l/min
Cavity:	VP000006
Weight:	0,18 kg

NOTES

Installation torque:	100 - 130 Nm
Seal kit:	RC700006

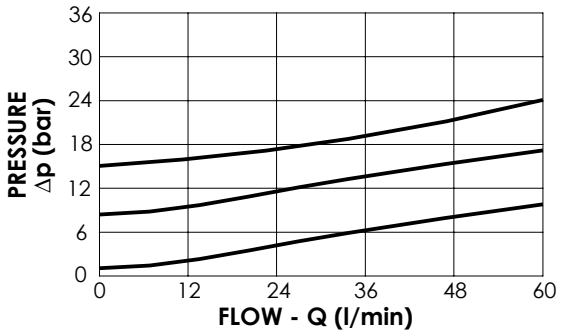

ORDERING CODES

Quick code	Description	Craking pressure (bar)	
CD000019	CDVN-060-PSNR-FN-006-N001	1	
CD000020	CDVN-060-PSNR-FN-006-N009	9	
CD000075	CDVN-060-PSNR-FN-006-N015	15	

CHECK VALVE

CDVN-080-PSNR

POPPET TYPE

ATLANTIC Fluid Tech

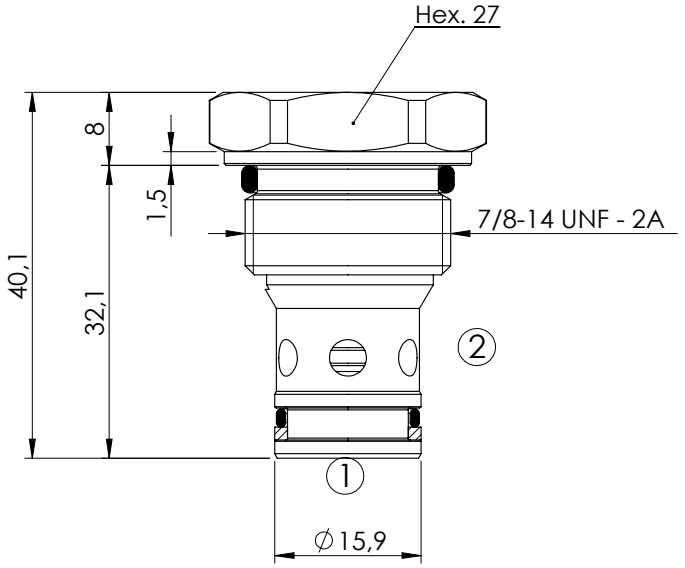

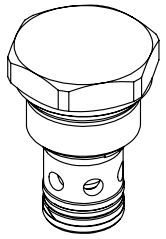

SPECIFICATIONS

Max. operating pressure:	350 bar
Rated flow:	80 l/min
Cavity:	SAE-10-2N
Weight:	0,09 kg

NOTES

Installation torque:	55 - 62 Nm
Seal kit:	RA700082

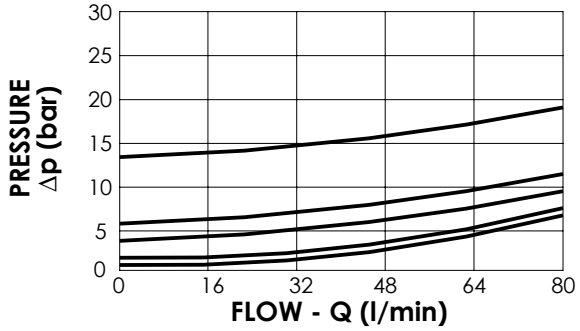

ORDERING CODES

Quick code	Description	Craking pressure (bar)	
CD000100	CDVN-080-PSNR-FN-S10-N000	0,35	
CD000023	CDVN-080-PSNR-FN-S10-N001	1	
CD000169	CDVN-080-PSNR-FN-S10-N003	3,7	
CD000101	CDVN-080-PSNR-FN-S10-N005	5,5	
CD000082	CDVN-080-PSNR-FN-S10-N013	13	

CHECK VALVE

CDVN-120-PSNR

POPPET TYPE

ATLANTIC Fluid Tech

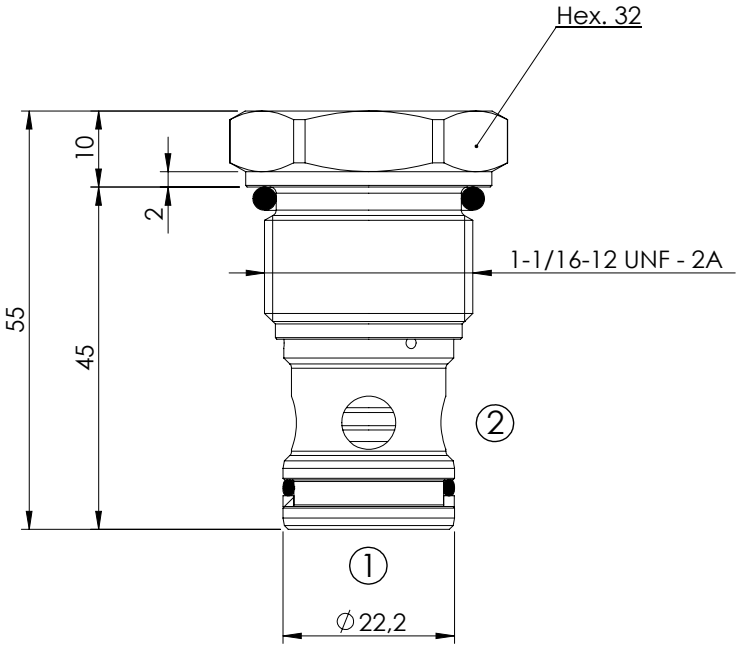

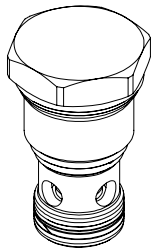

SPECIFICATIONS

Max. operating pressure:	350 bar
Rated flow:	120 l/min
Cavity:	SAE-12-2N
Weight:	0,18 kg

NOTES

Installation torque:	110 - 130 Nm
Seal kit:	RA700083

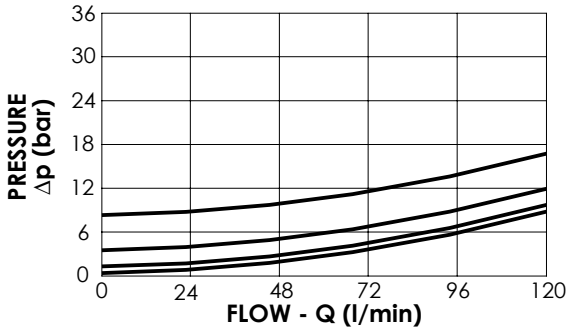

ORDERING CODES

Quick code	Description	Craking pressure (bar)	
CD000444	CDVN-120-PSNR-FN-S12-N000	0,3	
CD000046	CDVN-120-PSNR-FN-S12-N001	1	
CD000310	CDVN-120-PSNR-FN-S12-N004	4	
CD000445	CDVN-120-PSNR-FN-S12-N008	8	

CHECK VALVE

CDVN-XXX-PAGS

MONODIRECTIONAL POPPET TYPE

ATLANTIC Fluid Tech

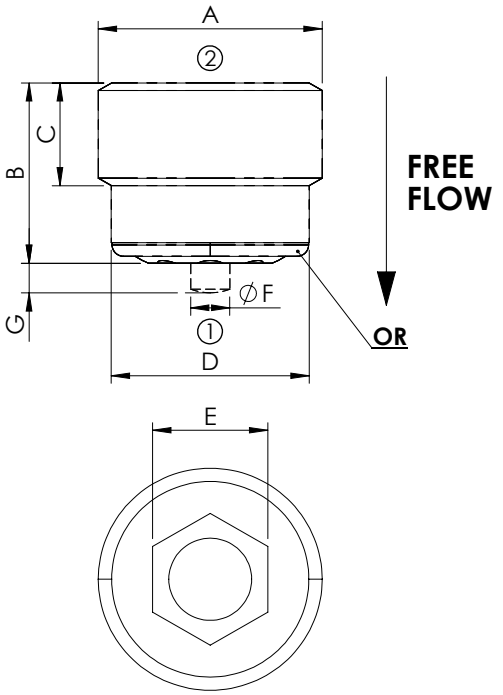

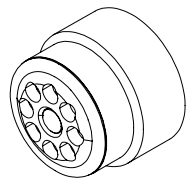

SPECIFICATIONS

Max. operating pressure: 500 bar

Quick code	A	B	C	D	E	F	G	OR
CD000179	G 1/8"	7,9	4,5	8,6	Hex. 5	1,7	1,3	6,00 x 1 N70
CD000180	G 1/4"	10,3	5,5	11,6	Hex. 7	2,0	1,3	9,00 x 1 N70
CD000181	G 3/8"	11,7	7,0	15	Hex. 6	2,7	2,0	11,00 x 1,5 N70
CD000182	G 1/2"	13,2	8,0	18,5	Hex.8	3,2	2,5	14,00 x 1,5 N70
CD000183	G 3/4"	17,1	10,5	24,0	Hex.12	5,5	3,8	18,77 x 1,78 N70

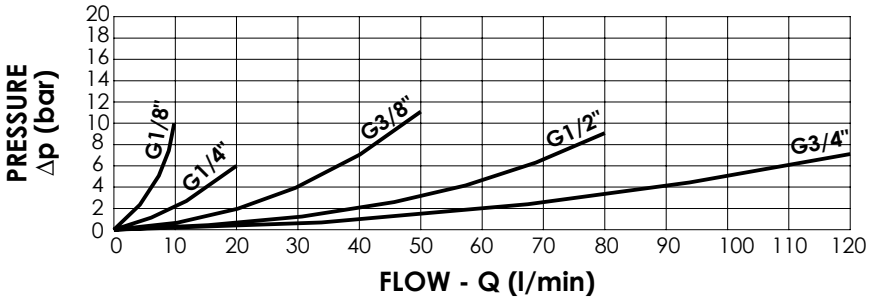

NOTES

Hardened seat and piston

ORDERING CODES

Quick code	Description	Craking pressure (bar)	Rated flow (l/min)	Cavity	Installation torque (Nm)
CD000179	CDVN-010-PAGS-307-N001	0.1	10	VP000307 (G1/8")	8
CD000180	CDVN-020-PAGS-309-N001	0.1	20	VP000309 (G1/4")	15
CD000181	CDVN-050-PAGS-310-N001	0.1	50	VP000310 (G3/8")	20
CD000182	CDVN-080-PAGS-311-N001	0.2	80	VP000311 (G1/2")	40
CD000183	CDVN-120-PAGS-312-N001	0.1	120	VP000312 (G3/4")	80

CHECK VALVE

CDVN-XXX-PANS

MONODIRECTIONAL POPPET TYPE

ATLANTIC Fluid Tech

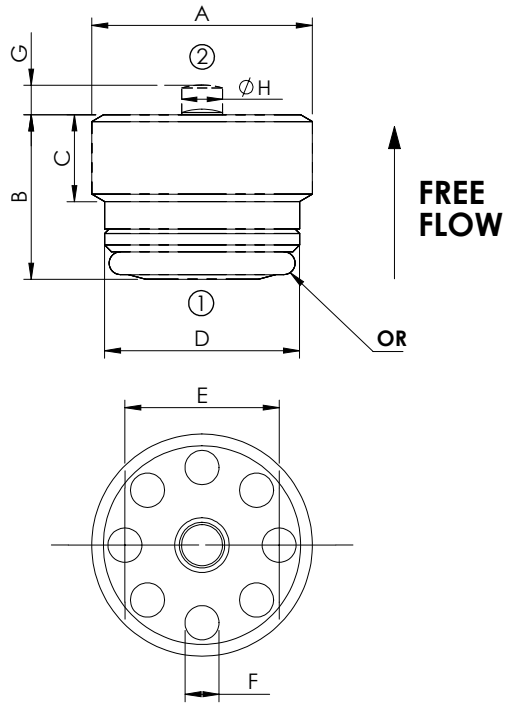

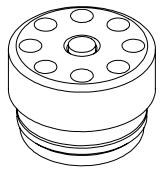

SPECIFICATIONS

Max. operating pressure: 500 bar

Quick code	A	B	C	D	E	F	G	H	OR
CD000173	G 1/8"	7,2	3,8	8,6	6,8	1,5	1,3	1,8	6.00 x 1 N70
CD000174	G 1/4"	9,0	4,5	11,5	8,8	2,2	1,5	2,4	9.00 x 1 N70
CD000175	G 3/8"	11,2	6,5	15,0	11,0	3,0	2,5	3,2	11.00 x 1.5 N70
CD000176	G 1/2"	13,5	8,0	18,5	14,2	3,8	3,0	4,0	14.00 x 1.5 N70
CD000178	G 3/4"	17,5	10,0	24,0	18,5	4,6	3,5	5,5	18.77 x 1.78 N70

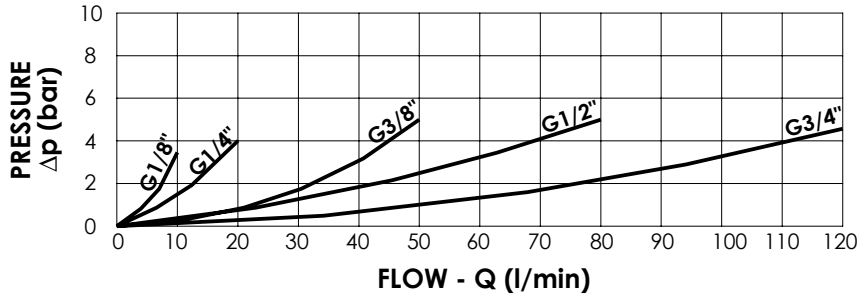

NOTES

Hardened seat and piston

ORDERING CODES

Quick code	Description	Cracking pressure (bar)	Rated flow (l/min)	Cavity	Installation torque (Nm)	Installation tool
CD000173	CDVN-010-PANS-307-N001	0,1	10	VP000307 (G1/8")	8	UM000390
CD000174	CDVN-020-PANS-309-N001	0,2	20	VP000309 (G1/4")	15	UM000391
CD000175	CDVN-050-PANS-310-N001	0,2	50	VP000310 (G3/8")	20	UM000392
CD000176	CDVN-080-PANS-311-N001	0,2	80	VP000311 (G1/2")	40	UM000393
CD000178	CDVN-120-PANS-312-N001	0,1	120	VP000312 (G3/4")	80	UM000394

CHECK VALVE

CDVN-015-SSNS

MONO-DIRECTIONAL SPHERE TYPE

ATLANTIC Fluid Tech

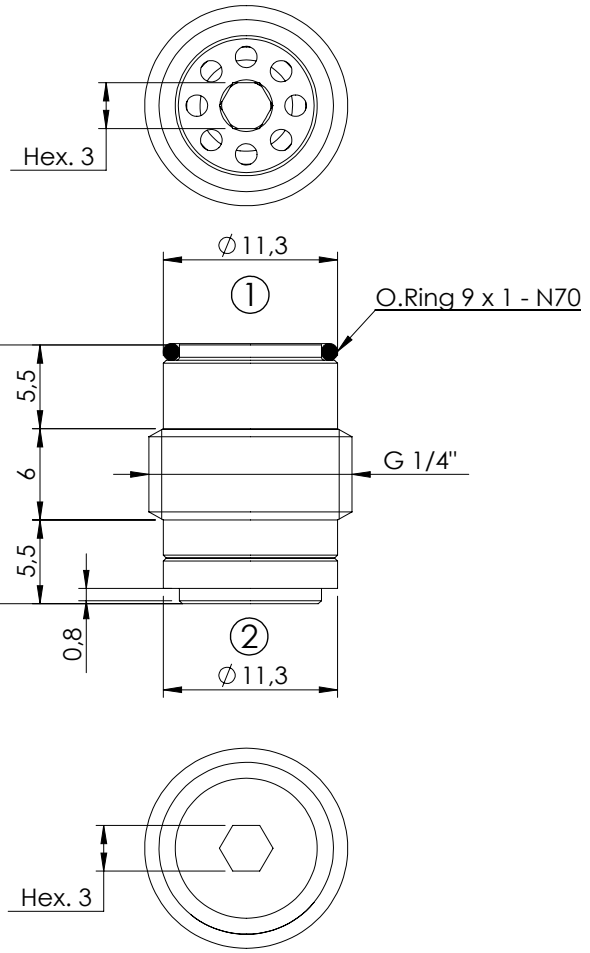

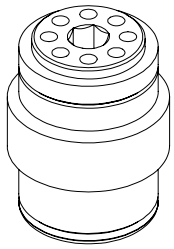

SPECIFICATIONS

Max. operating pressure:	**350 bar**
Rated flow:	**15 l/min**
Cavity:	**VP000098**
Weight:	**0,01 kg**

NOTES

Installation torque:	**6 Nm**

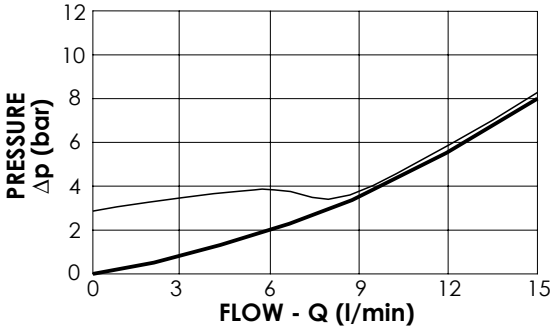

ORDERING CODES

Quick code	Description	Craking pressure (bar)	
CD000026	**CDVN-015-SSNS-FN-098-N003**	**3**	
CD000043	**CDVN-015-SSNS-FN-098-N000**	**0**	

CHECK VALVE

CDVN-030-SSNS

MONO DIRECTIONAL SPHERE TYPE

ATLANTIC Fluid Tech

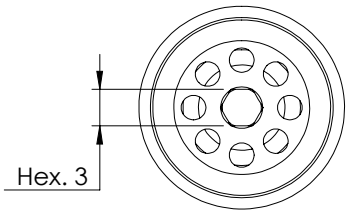

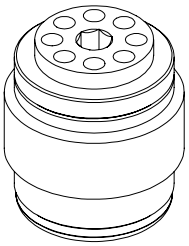

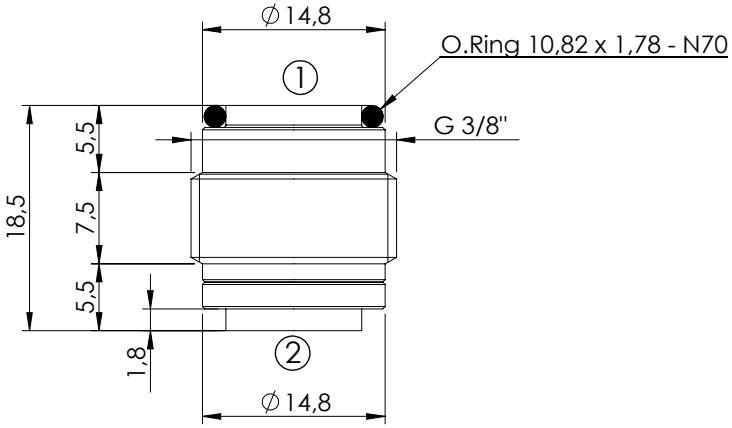

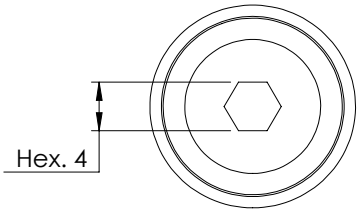

SPECIFICATIONS

Max. operating pressure:	**350 bar**
Rated flow:	**30 l/min**
Cavity:	**VP000310**
Weight:	**0,02 kg**

NOTES

Installation torque:	**8 Nm**

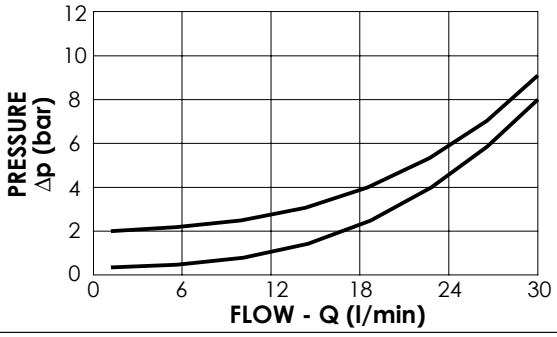

ORDERING CODES

Quick code	Description	Craking pressure (bar)	
CD000029	**CDVN-030-SSNS-FN-310-N002**	**2**	
CD000058	**CDVN-030-SSNS-FN-310-N000**	**0**	

CHECK VALVE

CDVN-050-SSNS

BIDIRECTIONAL SPHERE TYPE

ATLANTIC Fluid Tech

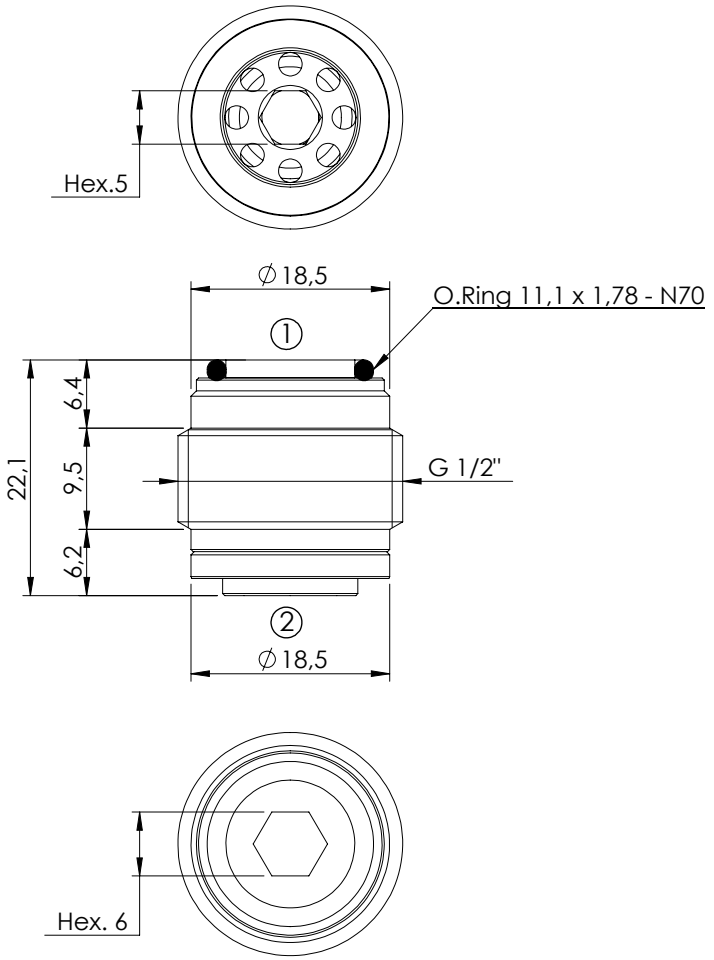

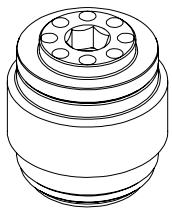

SPECIFICATIONS

Max. operating pressure:	**350 bar**
Rated flow:	**50 l/min**
Cavity:	**VP000158**
Weight:	**0,04 kg**

NOTES

Installation torque:	**25 Nm**

Bidirectional installations.
Fit O-Ring to side first inserted in cavity.

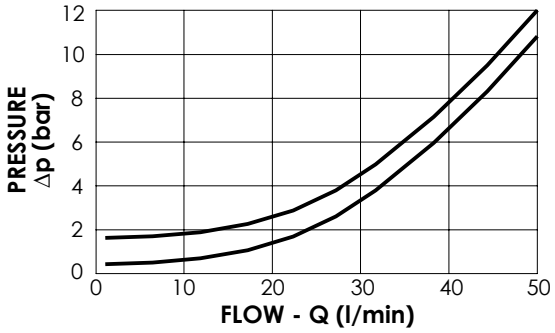

ORDERING CODES

Quick code	Description	Craking pressure (bar)	
CD000098	**CDVN-050-SSNS-FN-158-N002**	**1,5**	
CD000059	**CDVN-050-SSNS-FN-158-N000**	**0**	

CHECK VALVE

CDVN-070-PSNS

BIDIRECTIONAL POPPET TYPE

ATLANTIC Fluid Tech

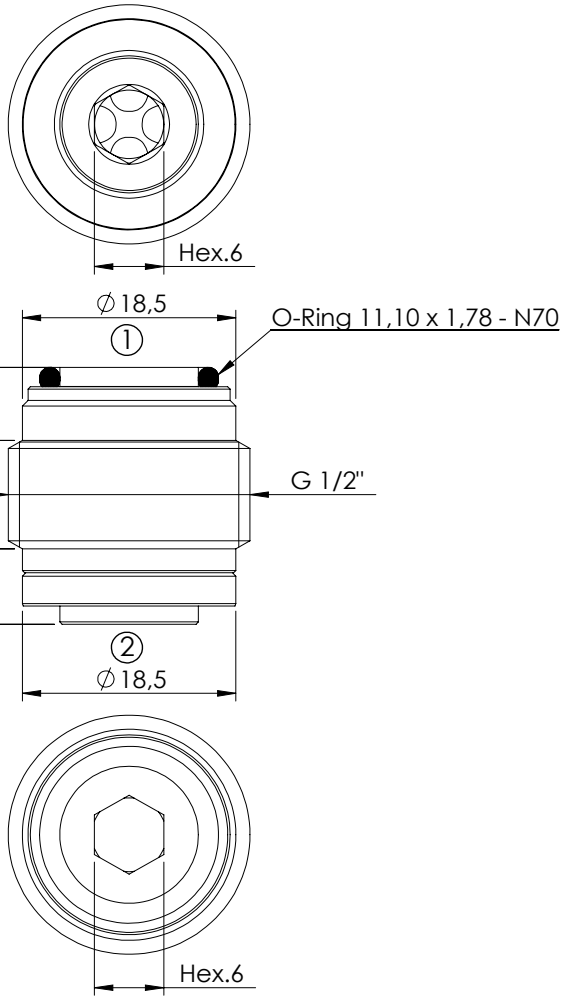

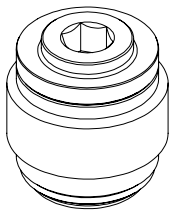

SPECIFICATIONS

Max. operating pressure:	**350 bar**
Rated flow:	**70 l/min**
Cavity:	**VP000158**
Weight:	**0,04 kg**

NOTES

Installation torque:	**25-30 Nm**

The valve can be assembled in both ways, OR to be placed only on the side first introduced in the cavity

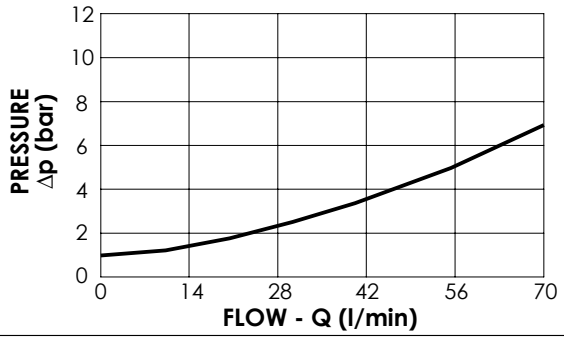

ORDERING CODES

Quick code	Description	Craking pressure (bar)	
CD000107	**CDVN-070-PSNS-FN-158-N001**	**1**	

CHECK VALVE

CDVN-120-PSNS

BIDIRECTIONAL POPPET TYPE

ATLANTIC Fluid Tech

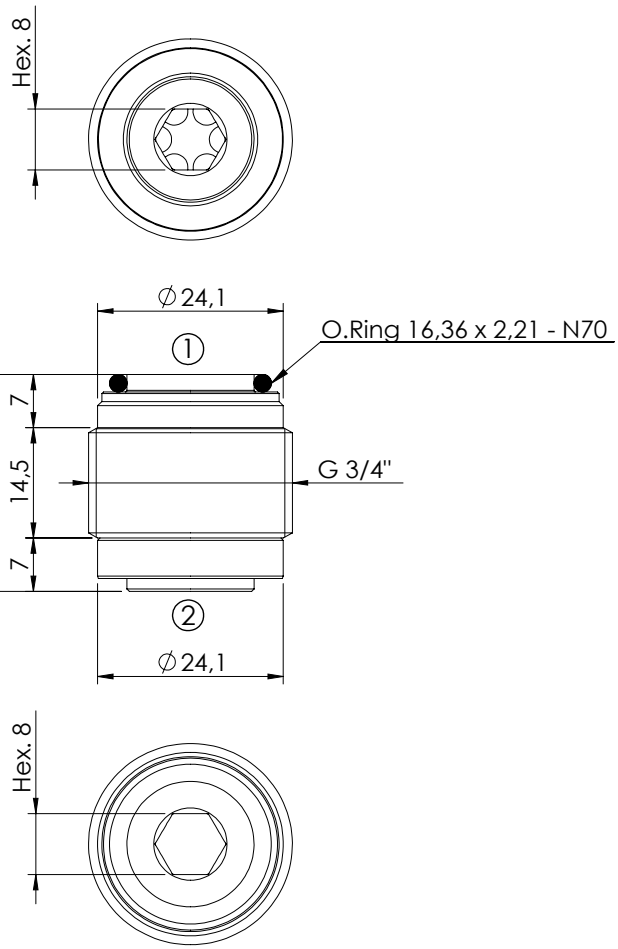

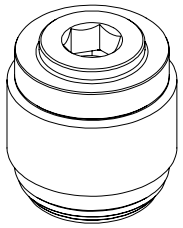

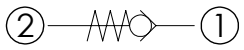

SPECIFICATIONS

Max. operating pressure:	**350 bar**
Rated flow:	**120 l/min**
Cavity:	**VP000202**
Weight:	**0,08 kg**

NOTES

Installation torque:	**60 - 75 Nm**

The valve can be assembled in both ways, OR to be placed only on the side first introduced in the cavity

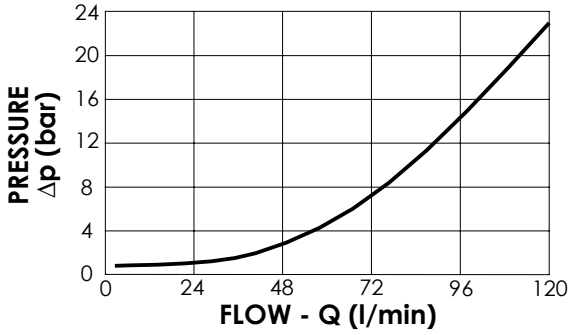

ORDERING CODES

Quick code	Description	Craking pressure (bar)	
CD000106	**CDVN-120-PSNS-FN-202-N001**	**1**	

CHECK VALVE

CDVN-XXX-PSNP

SLEEVE POPPET TYPE

ATLANTIC Fluid Tech

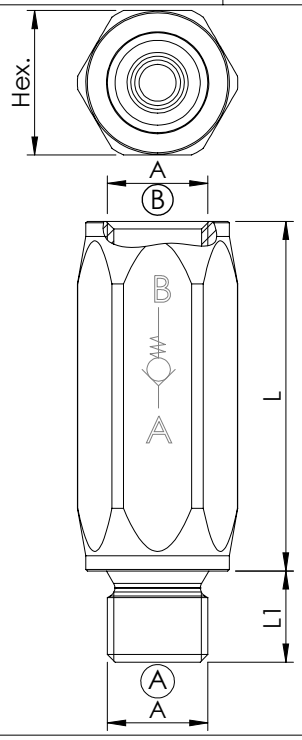

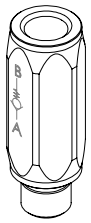

SPECIFICATIONS

Max. operating pressure:	350 bar
Rated flow:	30 - 350 l/min
Body:	Zinc plated steel

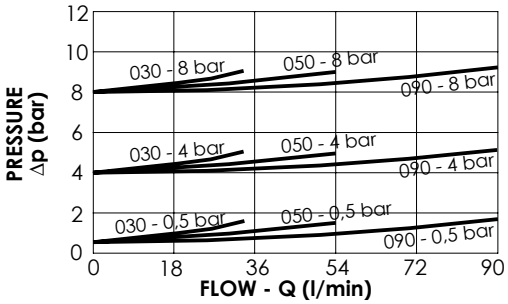

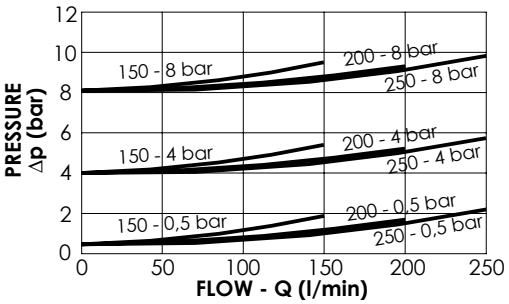

ORDERING CODES

Quick code	Description	Rated flow (l/min)	Cracking pressure (bar)	Dimension			
				A	L	L1	HEX
CD000425	CDVN-030-PSNP-MF-G14-N008	30	8	G 1/4"	46	12	19
CD000424	CDVN-030-PSNP-MF-G14-N004	30	4	G 1/4"	46	12	19
CD000423	CDVN-030-PSNP-MF-G14-N001	30	0,5	G 1/4"	46	12	19
CD000428	CDVN-050-PSNP-MF-G38-N008	50	8	G 3/8"	50	12	24
CD000427	CDVN-050-PSNP-MF-G38-N004	50	4	G 3/8"	50	12	24
CD000426	CDVN-050-PSNP-MF-G38-N001	50	0,5	G 3/8"	50	12	24
CD000136	CDVN-090-PSNP-MF-G12-N008	90	8	G 1/2"	57	14	30
CD000291	CDVN-090-PSNP-MF-G12-N004	90	4	G 1/2"	57	14	30
CD000142	CDVN-090-PSNP-MF-G12-N001	90	0,5	G 1/2"	57	14	30
CD000139	CDVN-150-PSNP-MF-G34-N008	150	8	G 3/4"	60	16	36
CD000292	CDVN-150-PSNP-MF-G34-N004	150	4	G 3/4"	60	16	36
CD000143	CDVN-150-PSNP-MF-G34-N001	150	0,5	G 3/4"	60	16	36
CD000140	CDVN-200-PSNP-MF-G10-N008	200	8	G 1"	88	18	45
CD000293	CDVN-200-PSNP-MF-G10-N004	200	4	G 1"	88	18	45
CD000144	CDVN-200-PSNP-MF-G10-N001	200	0,5	G 1"	88	18	45
CD000141	CDVN-250-PSNP-MF-G11-N008	250	8	G 1" 1/4	102	20	55
CD000294	CDVN-250-PSNP-MF-G11-N004	250	4	G 1" 1/4	102	20	55
CD000145	CDVN-250-PSNP-MF-G11-N001	250	0,5	G 1" 1/4	102	20	55

CHECK VALVE

CDVN-XXX-PSNP

SLEEVE POPPET TYPE

ATLANTIC Fluid Tech

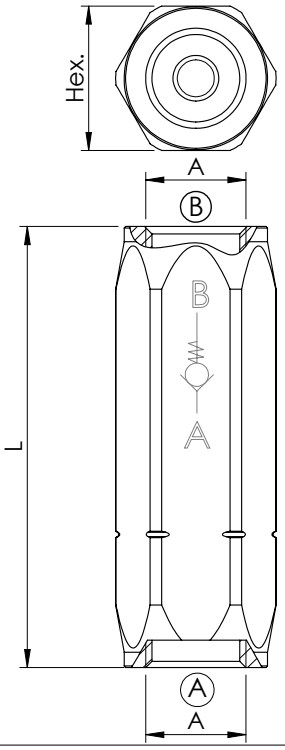

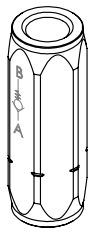

SPECIFICATIONS

Max. operating pressure:	350 bar
Rated flow:	30 - 250 l/min
Body:	Zinc plated steel

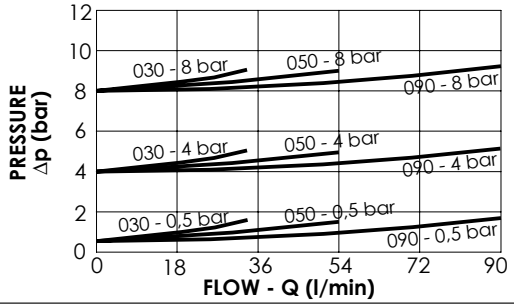

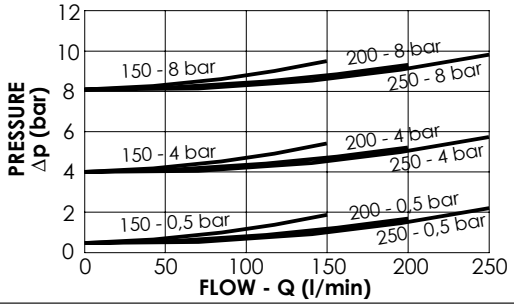

ORDERING CODES

Quick code	Description	Rated flow (l/min)	Cracking pressure (bar)	Dimension		
				A	L	HEX
CD000324	CDVN-030-PSNP-FF-G14-N008	30	8	G 1/4"	58	19
CD000312	CDVN-030-PSNP-FF-G14-N004	30	4	G 1/4"	58	19
CD000317	CDVN-030-PSNP-FF-G14-N001	30	0,5	G 1/4"	58	19
CD000323	CDVN-050-PSNP-FF-G38-N008	50	8	G 3/8"	62	24
CD000318	CDVN-050-PSNP-FF-G38-N004	50	4	G 3/8"	62	24
CD000212	CDVN-050-PSNP-FF-G38-N001	50	0,5	G 3/8"	62	24
CD000277	CDVN-090-PSNP-FF-G12-N008	90	8	G 1/2"	71	30
CD000287	CDVN-090-PSNP-FF-G12-N004	90	4	G 1/2"	71	30
CD000281	CDVN-090-PSNP-FF-G12-N001	90	0,5	G 1/2"	71	30
CD000278	CDVN-150-PSNP-FF-G34-N008	150	8	G 3/4"	83	36
CD000421	CDVN-150-PSNP-FF-G34-N006	150	6	G 3/4"	83	36
CD000288	CDVN-150-PSNP-FF-G34-N004	150	4	G 3/4"	83	36
CD000282	CDVN-150-PSNP-FF-G34-N001	150	0,5	G 3/4"	83	36
CD000279	CDVN-200-PSNP-FF-G10-N008	200	8	G 1"	106	45
CD000289	CDVN-200-PSNP-FF-G10-N004	200	4	G 1"	106	45
CD000283	CDVN-200-PSNP-FF-G10-N001	200	0,5	G 1"	106	45
CD000280	CDVN-250-PSNP-FF-G11-N008	250	8	G 1" 1/4	127	55
CD000290	CDVN-250-PSNP-FF-G11-N004	250	4	G 1" 1/4	127	55
CD000284	CDVN-250-PSNP-FF-G11-N001	250	0,5	G 1" 1/4	127	55

CHECK VALVE

CDVN-010-DSNS

INSERT TYPE
DOUBLE MOUNTING

ATLANTIC Fluid Tech

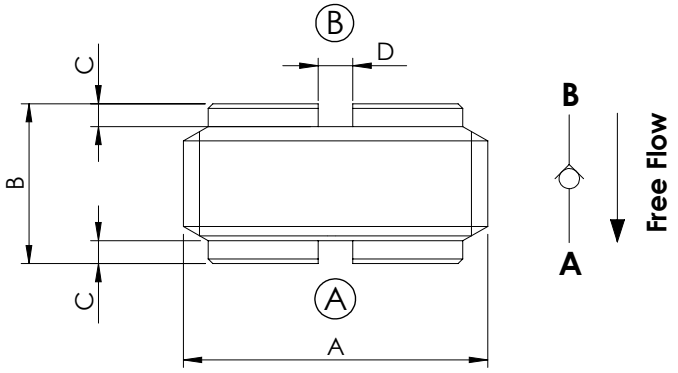

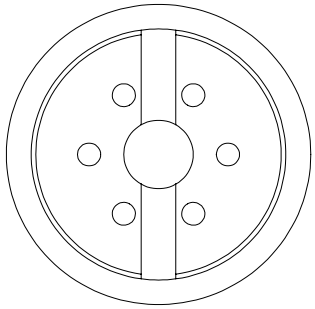

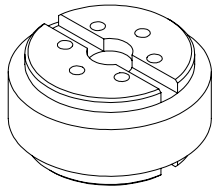

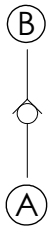

SPECIFICATIONS

Max. operating pressure:	350 bar
Rated flow:	See table
Cavity:	See table
Weight:	0,1 kg

NOTES

-Disk type

-Not leak proof

-Without spring

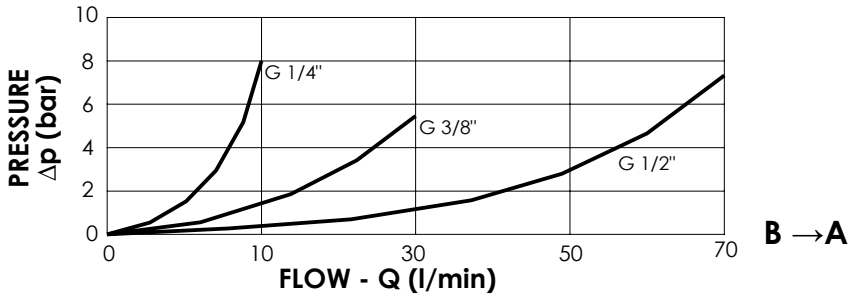

CODE	RATED FLOW
G 1/4"	10 l/min
G 3/8"	30 l/min
G 1/2"	70 l/min

ORDERING CODES

Quick code	Description	Install. torque (Nm)	Cracking pressure (bar)	Dimension			
				A	B	C	D
CD000150	CDVN-010-DSNS-00-G14-N350	5	0	G 1/4"	7	1	1,5
CD000148	CDVN-030-DSNS-00-G38-N350	10	0	G 3/8"	7,5	1	1,5
CD000151	CDVN-070-DSNS-00-G12-N350	10	0	G 1/2"	11	1,5	1,5

ATLANTIC
Fluid Tech

SECTION 5

Pilot Operated Check Valves

MANAGEMENT SYSTEM CERTIFICATION
DNV·GL
ISO 9001 = ISO 14001
OHSAS 18001

PILOT OPERATED CHECK VALVES

ATLANTIC Fluid Tech

Hydraulic scheme	Valve description	Valve type	Rated flow (l/min)	Max. pressure (bar)	Installation	Main port size or cavity type	Page
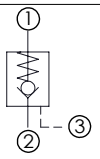	CDPN-030-PSGR	Poppet type	30	350	Cartridge	SAE-08-3C	5.01.**010**
	CDPN-060-PSGR	Poppet type	60	350	Cartridge	SAE-10-3C	5.01.**020**
	CDPN-060-PSGR	Poppet type	60	350	Cartridge	VP000161 (T-11A)	5.01.**030**
	CDPN-120-PSGR	Poppet type	120	350	Cartridge	VP000165 (T-2A)	5.01.**040**
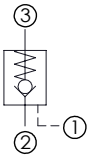	CDPN-030-PANR	Poppet type	30	350	Cartridge	VP000314	5.02.**050**
	CDPN-030-PSNE	Poppet type, separate pilot piston	30	350	Cartridge	VP000028	5.02.**060**
	CDPN-050-PSNN	Poppet type, separate pilot piston	50	350	Cartridge	VP000193	5.02.**070**
	CDPN-060-PSNN	Poppet type, separate pilot piston	60	350	Cartridge	VP000038	5.02.**080**
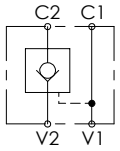	MCSN-020-SLAC	Single acting, poppet type	20	350	In line	G 1/4"	5.03.**090**
	MCSN-030-TLNS	Single acting, poppet type	30	350	In line	G 3/8"	5.03.**100**
	MCSN-030-TANS	Single acting, poppet type	30	350	Flanged	G 3/8"	5.03.**110**
	MCSN-060-TLNS	Single acting, poppet type	60	350	In line	G 1/2"	5.03.**120**
	MCSN-060-TANS	Single acting, poppet type	60	350	Flanged	G 1/2"	5.03.**130**
	MCSN-100-TLNS	Single acting, poppet type	100	350	In line	G 3/4"	5.03.**140**
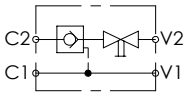	MCSN-020-TLLC	Single acting, manual shut off, left version	20	210	In line	G 3/8"	5.04.**150**
	MCSN-020-TLRC	Single acting, manual shut off, right version	20	210	In line	G 3/8"	5.04.**160**
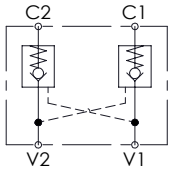	MCDN-020-SLAS	Double acting, poppet type	20	350	In line	G 1/4"	5.05.**170**
	MCDN-020-SLAS	Double acting, poppet type, steel body	20	350	In line	G 3/8"	5.05.**180**
	MCDN-020-SLGS	Double acting, poppet type, with banjo	20	350	In line	G 3/8"	5.05.**190**
	MCDN-030-TLNS	Double acting, poppet type	30	350	In line	G 3/8"	5.05.**200**
	MCDN-030-ZBNS	Double acting, poppet type	30	350	Flanged	G 3/8"	5.05.**210**
	MCDN-030-TBNS	Double acting, poppet type	30	350	Flanged	G 1/4"	5.05.**220**
	MCDN-030-SBNS	Double acting, poppet type, steel body	30	350	Flanged	G 3/8"	5.05.**230**
	MCDN-060-TLNS	Double acting, poppet type	60	350	In line	G 1/2"	5.05.**240**
	MCDN-060-TBNS	Double acting, poppet type	60	350	Flanged	G 1/2"	5.05.**250**
	MCDN-100-LLNR	Double acting, poppet type	100	350	In line	G 3/4"	5.05.**260**

PILOTED CHECK VALVE

CDPN-030-PSGR

INTEGRAL PILOT PISTON

ATLANTIC Fluid Tech

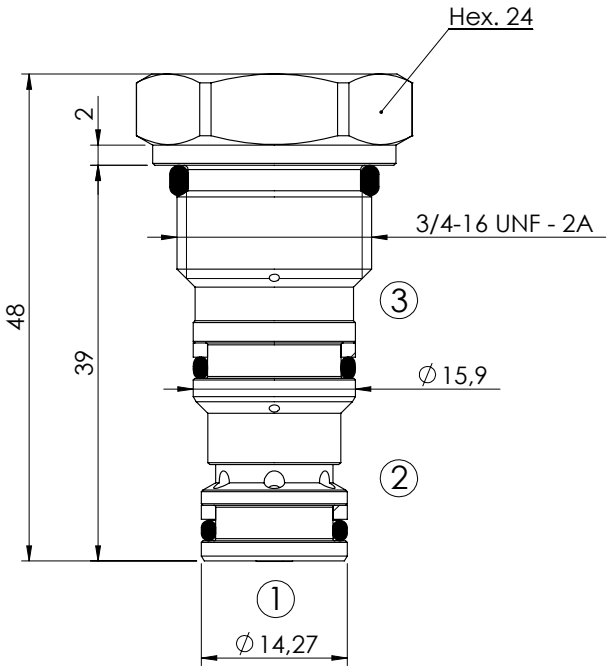

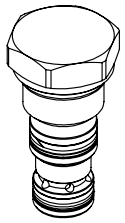

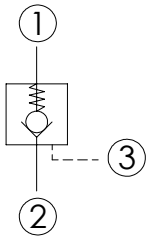

SPECIFICATIONS

Max. operating pressure:	350 bar
Rated flow:	30 l/min
Cavity:	SAE-08-3C
Weight:	0,09 kg
Pilot ratio:	3:1

NOTES

Installation torque:	40 - 45 Nm
Seal kit:	RA700086

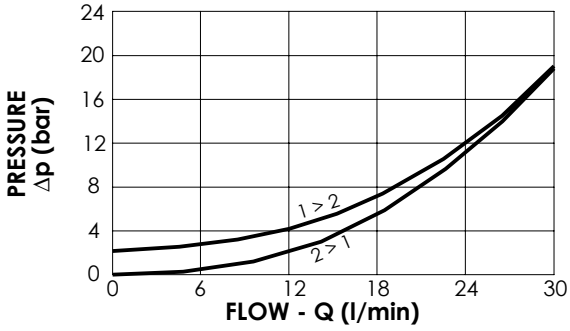

ORDERING CODES

Quick code	Description	Craking pressure (bar)	O-Ring on pilot piston	
CD000027	CDPN-030-PSGR-03-S08-N002	2	YES	
CD000061	CDPN-030-PSGM-03-S08-N002	2	NO	

PILOTED CHECK VALVE

CDPN-060-PSGR

INTEGRAL PILOT PISTON

ATLANTIC Fluid Tech

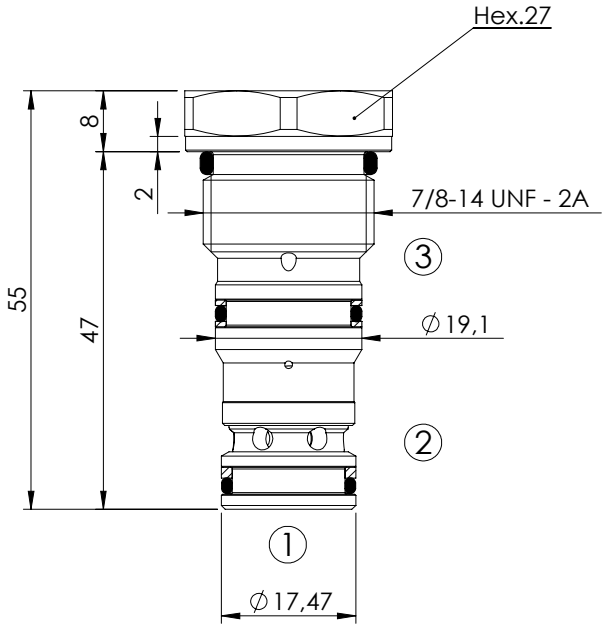

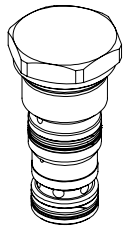

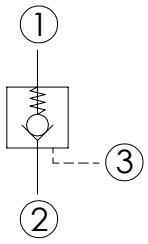

SPECIFICATIONS

Max. operating pressure:	350 bar
Rated flow:	60 l/min
Cavity:	SAE-10-3C
Weight:	0,12 kg
Pilot ratio:	3,2 : 1

NOTES

Installation torque:	55 - 62 Nm
Seal kit:	RB700087

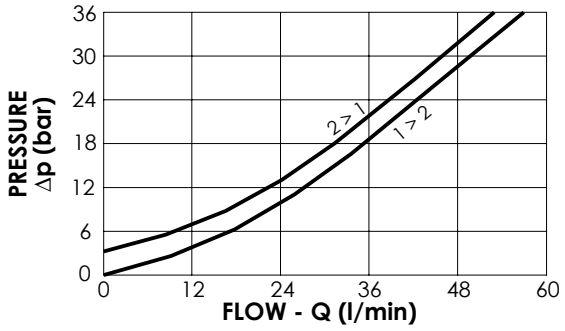

ORDERING CODES

Quick code	Description	Craking pressure (bar)	O-Ring on pilot piston	
CD000109	CDPN-060-PSGR-03-S10-N002	2	YES	
CD000113	CDPN-060-PSGM-03-S10-N002	2	NO	
CD000170	CDPN-060-PSGR-03-S10-N005	5	YES	
CD000171	CDPN-060-PSGM-03-S10-N005	5	NO	

PILOTED CHECK VALVE

CDPN-060-PSGR

INTEGRAL PILOT PISTON

ATLANTIC Fluid Tech

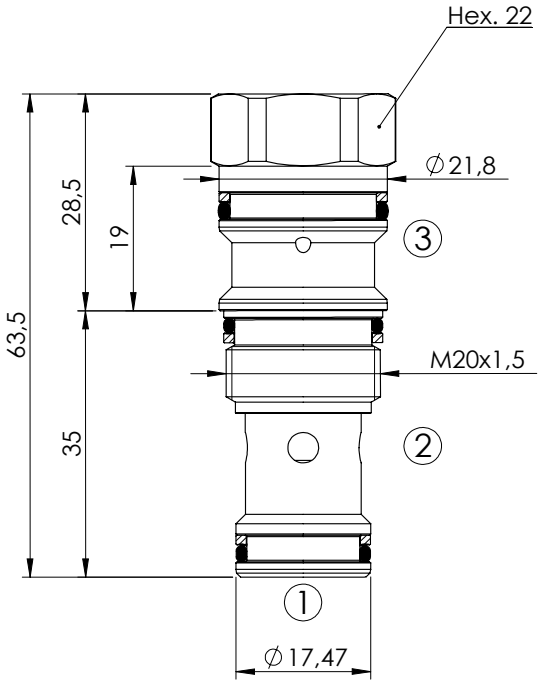

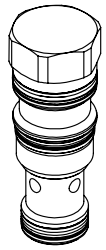

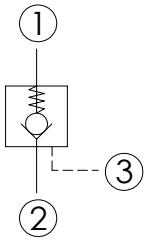

SPECIFICATIONS

Max. operating pressure:	350 bar
Rated flow:	60 l/min
Cavity:	VP000161 (SUN T-11A)
Weight:	0,12 kg
Pilot ratio:	3,2 : 1

NOTES

Installation torque:	40 - 50 Nm
Seal kit:	RC700161

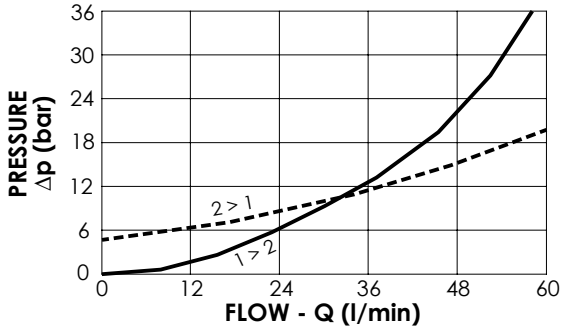

ORDERING CODES

Quick code	Description	Craking pressure (bar)	O-Ring on pilot piston	
CD000226	CDPN-060-PSGR-03-161-N002	2	YES	
CD000227	CDPN-060-PSGM-03-161-N002	2	NO	
CD000224	CDPN-060-PSGR-03-161-N005	5	YES	
CD000225	CDPN-060-PSGM-03-161-N005	5	NO	
CD000229	CDPN-060-PSGR-03-161-N007	7	YES	

PILOTED CHECK VALVE

CDPN-120-PSGR

INTEGRAL PILOT PISTON

ATLANTIC Fluid Tech

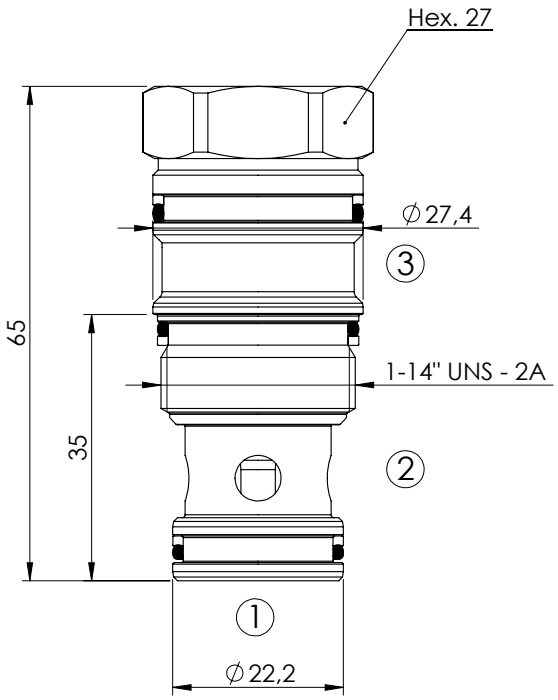

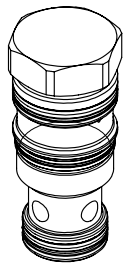

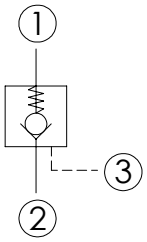

SPECIFICATIONS

Max. operating pressure:	350 bar
Rated flow:	120 l/min
Cavity:	VP000165 (SUN T-2A)
Weight:	0,2 kg
Pilot ratio:	3,5 : 1

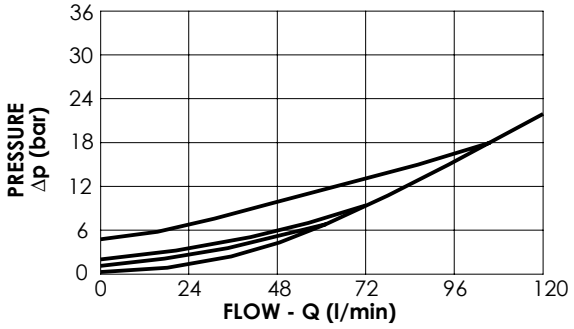

NOTES

Installation torque:	60 - 65 Nm
Seal kit:	RC700165

ORDERING CODES

Quick code	Description	Craking pressure (bar)	O-Ring on pilot piston	
CD000546	CDPN-120-PSGR-03-165-N000	0,3	YES	
CD000504	CDPN-120-PSGR-03-165-N002	2	YES	
CD000549	CDPN-120-PSGM-03-165-N002	2	NO	
CD000536	CDPN-120-PSGM-03-165-N003	3	NO	
CD000547	CDPN-120-PSGR-03-165-N005	5	YES	

PILOTED CHECK VALVE

CDPN-030-PANR

INTEGRAL PILOT PISTON

ATLANTIC Fluid Tech

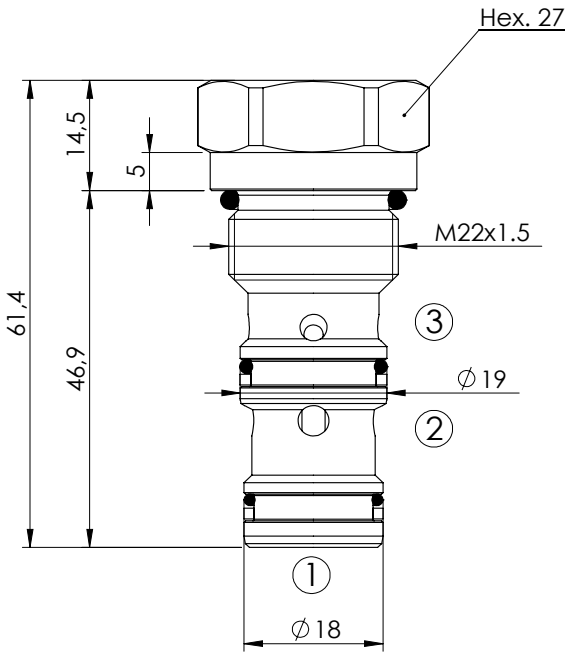

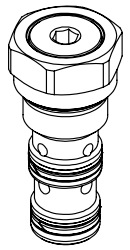

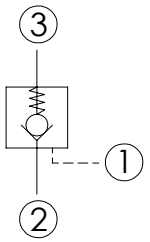

SPECIFICATIONS

Max. operating pressure:	350 bar
Rated flow:	30 l/min
Cavity:	VP000314
Weight:	0,1 kg
Pilot ratio:	4 : 1

NOTES

Installation torque:	55 - 62 Nm
Seal kit:	RC700314

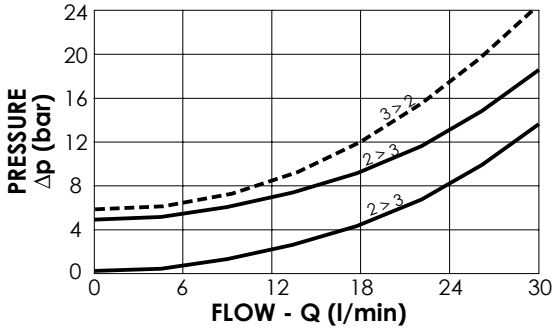

ORDERING CODES

Quick code	Description	Craking pressure (bar)	O-Ring on pilot piston	
CD000186	CDPN-030-PANR-04-314-N005	5	YES	
CD000235	CDPN-030-PANM-04-314-N001	1	NO	

PILOT OPERATED CHECK VALVE

CDPN-030-PSNE

SEPARATE PILOT PISTON

ATLANTIC Fluid Tech

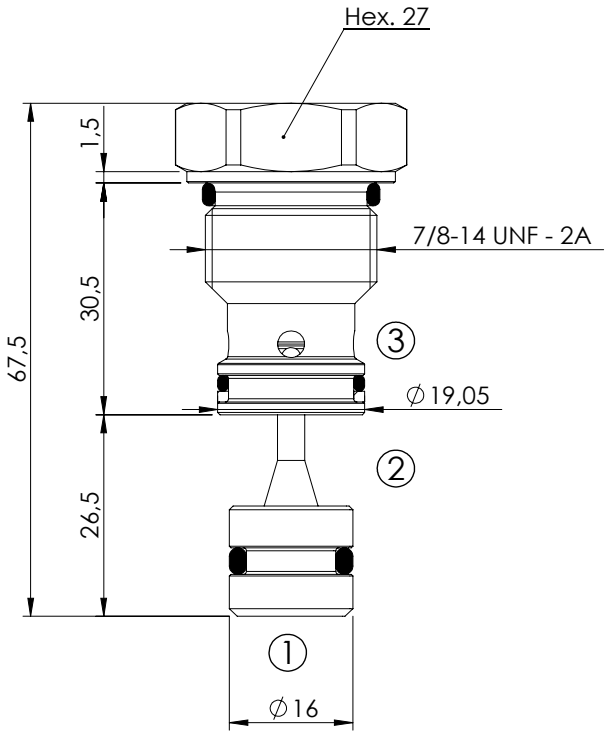

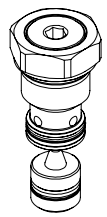

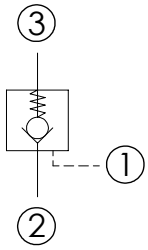

SPECIFICATIONS

Max. operating pressure:	350 bar
Rated flow:	30 l/min
Cavity:	VP000028
Weight:	0,13 kg
Pilot ratio:	7:1

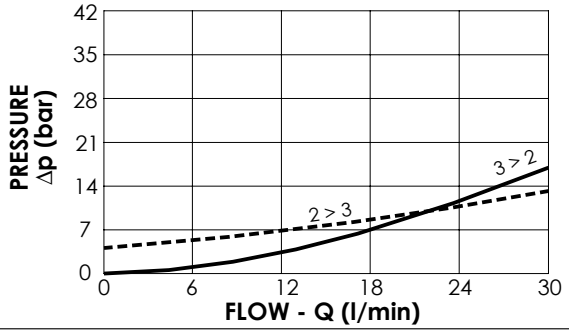

NOTES

Installation torque:	80 - 90 Nm

ORDERING CODES

Quick code	Description	Cracking pressure (bar)	O-Ring on pilot piston	
SC000002	CDPN-030-PSNE-07-028-N005	4,5	YES	
SC000044	CDPN-030-PSNN-07-028-N005	4,5	NO	

PILOT OPERATED CHECK VALVE

CDPN-050-PSNN

SEPARATE PILOT PISTON

ATLANTIC Fluid Tech

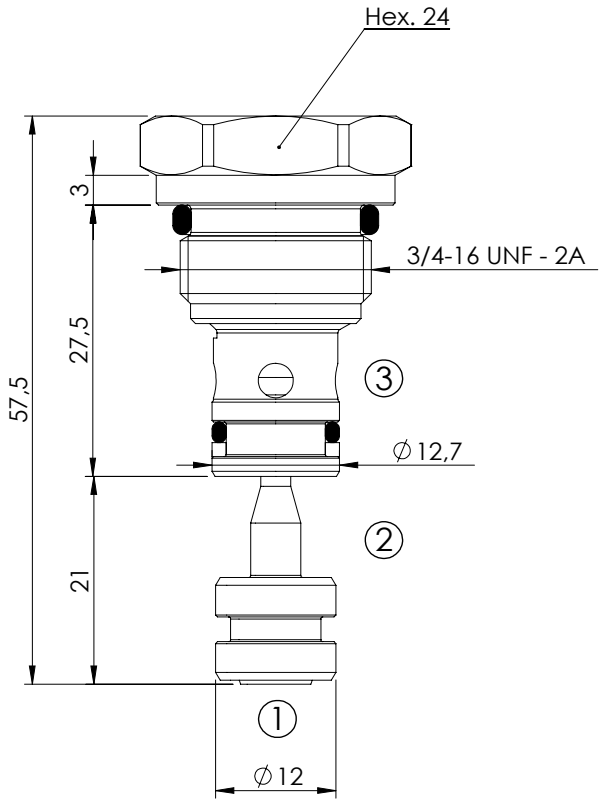

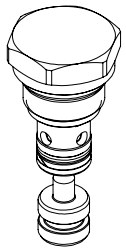

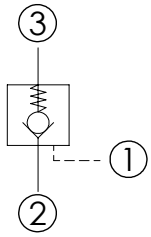

SPECIFICATIONS

Max. operating pressure:	350 bar
Rated flow:	50 l/min
Cavity:	VP000193
Weight:	0,07 kg
Pilot ratio:	4:1

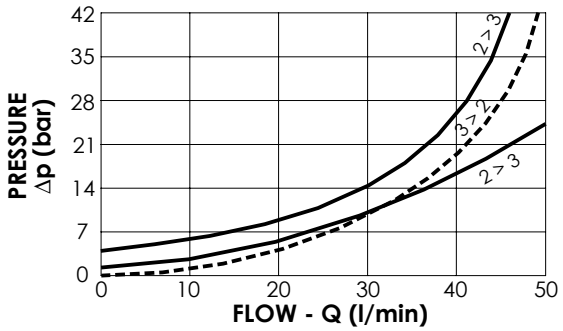

NOTES

Installation torque:	45 - 50 Nm
Seal kit:	RC700193

ORDERING CODES

Quick code	Description	Cracking pressure (bar)	O-Ring on pilot piston	
SC000051	CDPN-050-PSNN-04-193-N001	1	NO	
SC000056	CDPN-050-PSNN-04-193-N003	3	NO	
SC000057	CDPN-050-PSNE-04-193-N003	3	YES	

PILOT OPERATED CHECK VALVE

CDPN-060-PSNN

SEPARATE PILOT PISTON

ATLANTIC Fluid Tech

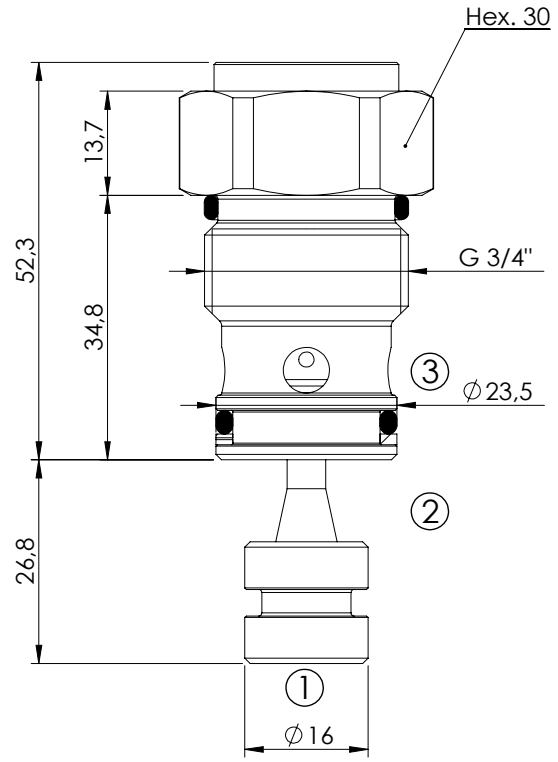

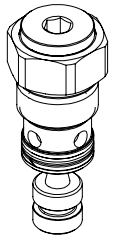

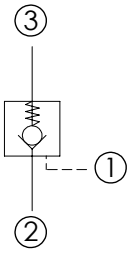

SPECIFICATIONS

Max. operating pressure:	350 bar
Rated flow:	60 l/min
Cavity:	VP000038
Weight:	0,2 kg
Pilot ratio:	3:1

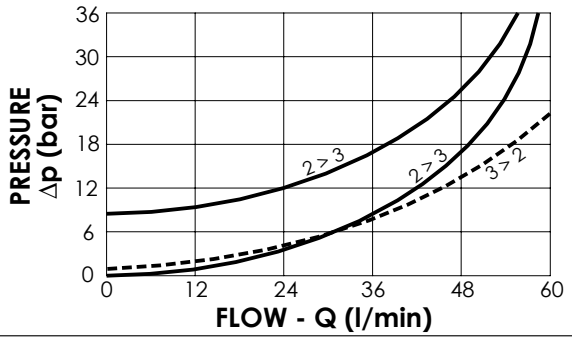

NOTES

Installation torque:	100 - 130 Nm
Seal kit:	RC700038

ORDERING CODES

Quick code	Description	Cracking pressure (bar)	O-Ring on pilot piston	
SC000052	CDPN-060-PSNN-03-038-N001	1	NO	
SC000054	CDPN-060-PSNN-03-038-N008	8	NO	
SC000055	CDPN-060-PSNE-03-038-N008	8	YES	

PILOT OPERATED CHECK VALVE

MCSN-020-SLAC

SINGLE ACTING

ATLANTIC Fluid Tech

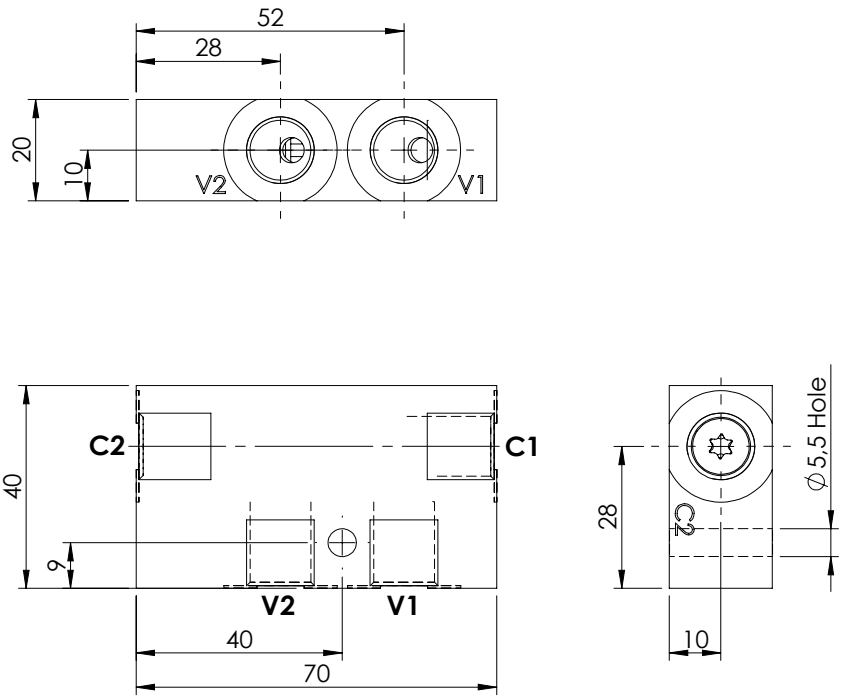

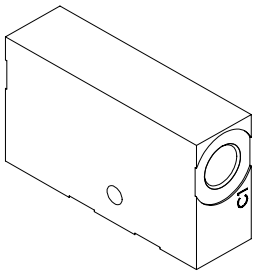

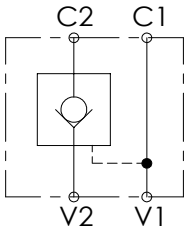

SPECIFICATIONS

Max. operating pressure:	**350 bar**
Rated flow:	**20 l/min**
Manifold:	**Steel**
Weight:	**0,36 kg**

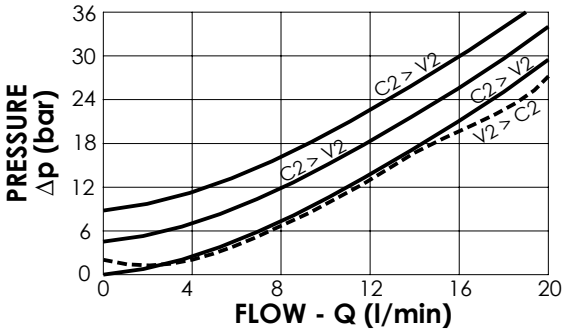

ORDERING CODES

Quick code	Description	Main ports size	Pilot ratio	Cracking pressure (bar)	O-Ring on pilot piston
MC000059	**MCSN-020-SLAC-04-G14-N003**	V1,V2,C1,C2 : **G 1/4"**	**4:1**	**3**	**YES**
MC000094	**MCSN-020-SLAC-04-G14-N008**	V1,V2,C1,C2 : **G 1/4"**	**4:1**	**8**	**YES**
MC000097	**MCSN-020-SLAC-07-G14-N005**	V1,V2,C1,C2 : **G 1/4"**	**7:1**	**5**	**YES**

PILOT OPERATED CHECK VALVE

MCSN-030-TLNS

SINGLE ACTING

ATLANTIC Fluid Tech

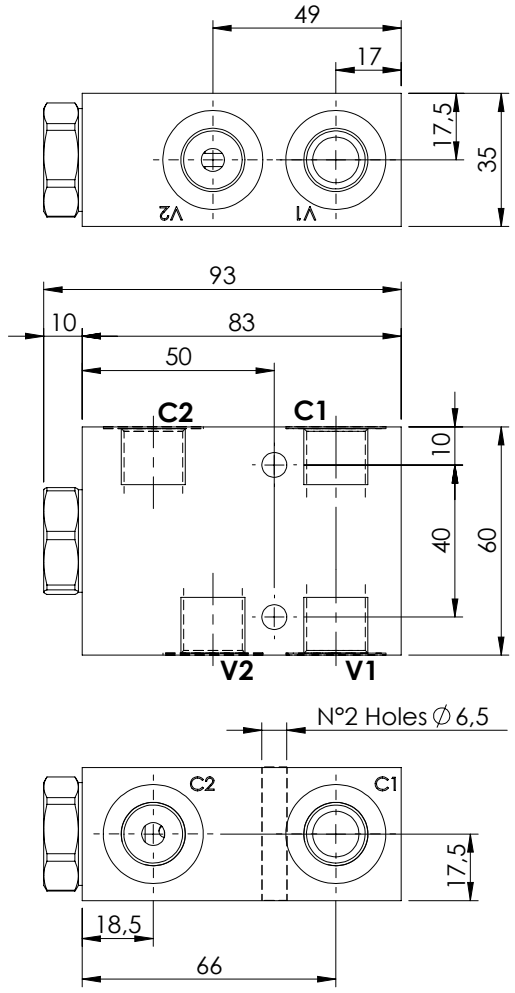

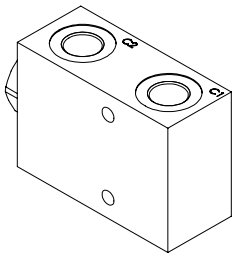

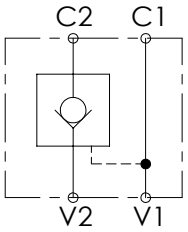

SPECIFICATIONS

Max. operating pressure:	**350 bar**
Rated flow:	**30 l/min**
Manifold:	**Aluminium**
Weight:	**0,49 kg**

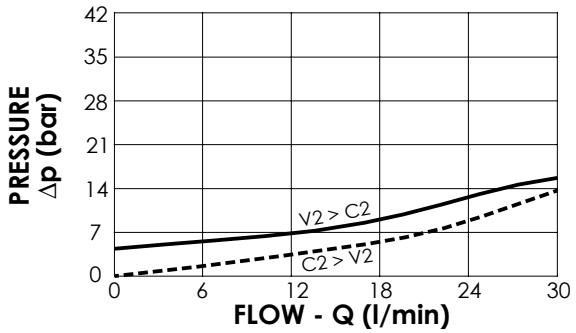

ORDERING CODES

Quick code	Description	Main ports size	Pilot ratio	Cracking pressure (bar)	O-Ring on pilot piston
MC000078	**MCSN-030-TLNS-07-G38-N005**	V1,V2,C1,C2 : **G 3/8"**	**7:1**	**5**	**NO**
MC000075	**MCSN-030-TLNC-07-G38-N005**	V1,V2,C1,C2 : **G 3/8"**	**7:1**	**5**	**YES**

PILOT OPERATED CHECK VALVE

MCSN-030-TANS

SINGLE ACTING
ONE FLANGED PORT

ATLANTIC Fluid Tech

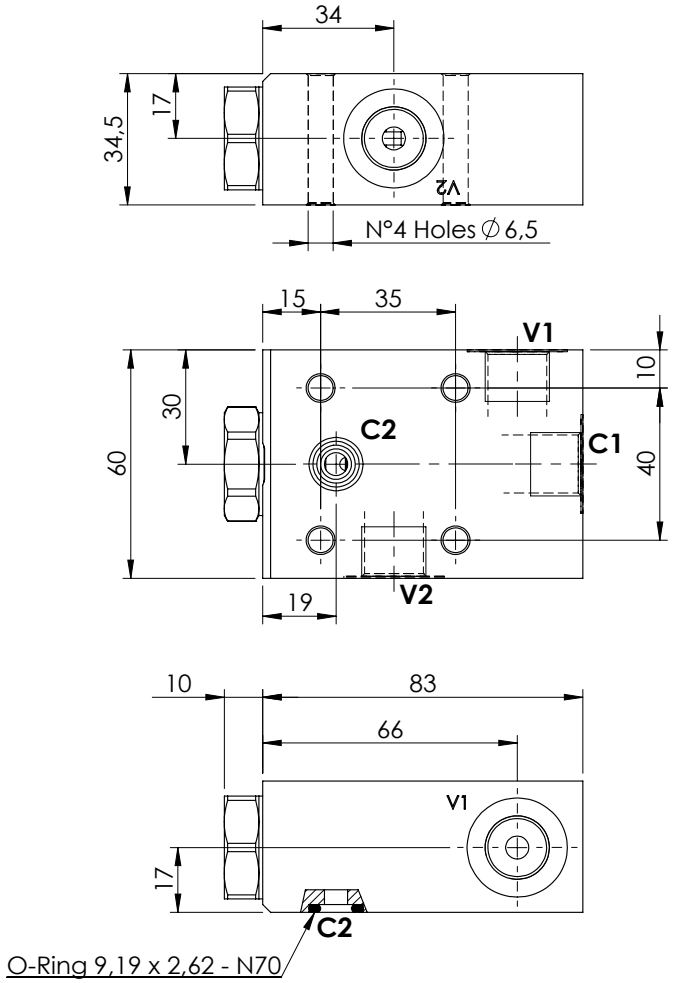

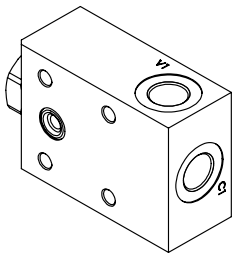

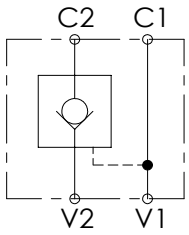

SPECIFICATIONS

Max. operating pressure:	350 bar
Rated flow:	30 l/min
Manifold:	Aluminium
Weight:	0,49 kg

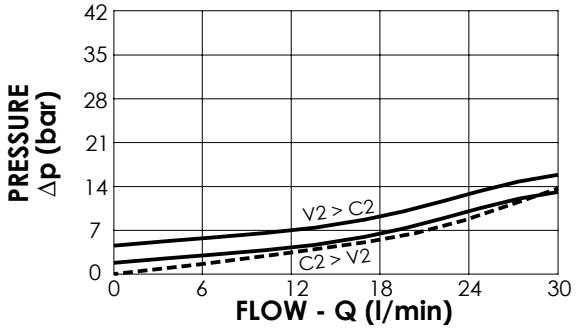

ORDERING CODES

Quick code	Description	Main ports size	Pilot ratio	Cracking pressure (bar)	O-Ring on pilot piston
MC000064	MCSN-030-TANS-07-G38-N001	V1,V2,C1: **G 3/8"** C2 : ∅ **6**	7:1	1	NO
MC000066	MCSN-030-TANS-07-G38-N005	V1,V2,C1: **G 3/8"** C2: ∅ **6**	7:1	5	NO
MC000068	MCSN-030-TANC-07-G38-N005	V1,V2,C1: **G 3/8"** C2: ∅ **6**	7:1	5	YES

PILOT OPERATED CHECK VALVE

MCSN-060-TLNS

SINGLE ACTING

ATLANTIC Fluid Tech

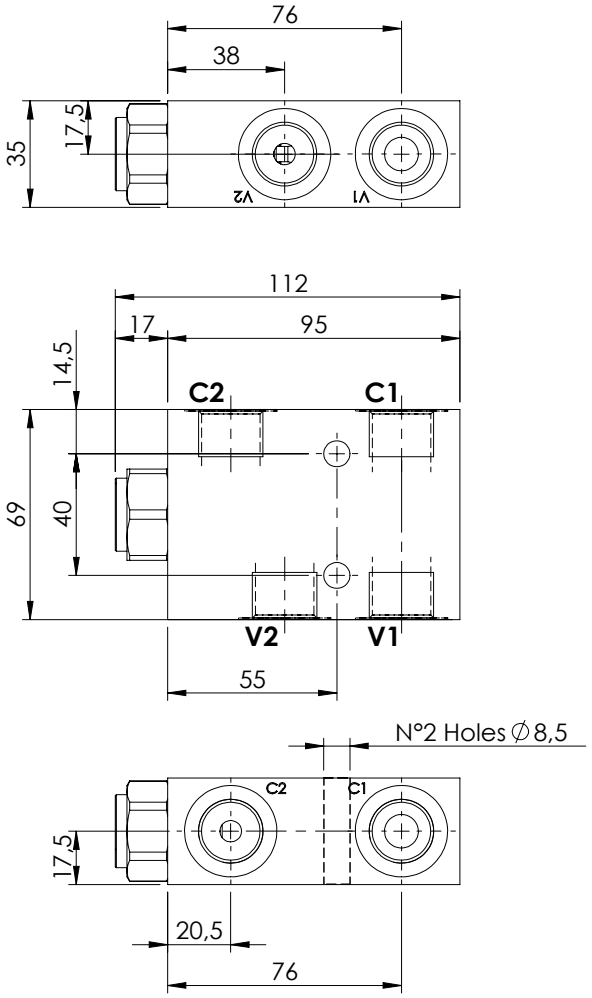

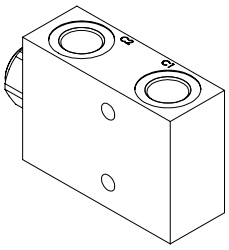

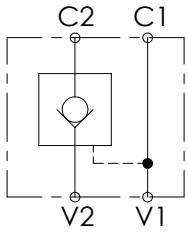

SPECIFICATIONS

Max. operating pressure:	**350 bar**
Rated flow:	**60 l/min**
Manifold:	**Aluminium**
Weight:	**0,66 kg**

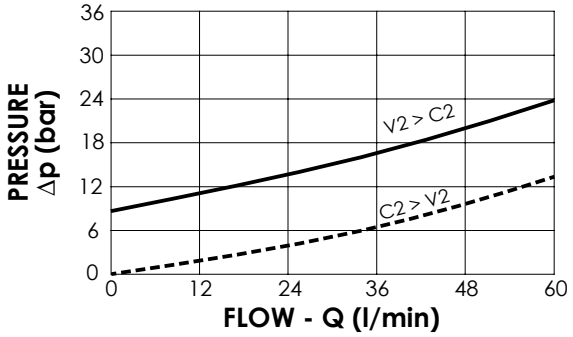

ORDERING CODES

Quick code	Description	Main ports size	Pilot ratio	Cracking pressure (bar)	O-Ring on pilot piston
MC000079	**MCSN-060-TLNS-03-G12-N008**	V1,V2,C1,C2 : **G 1/2"**	**3:1**	**8**	**NO**
MC000076	**MCSN-060-TLNC-03-G12-N008**	V1,V2,C1,C2 : **G 1/2"**	**3:1**	**8**	**YES**

PILOT OPERATED CHECK VALVE

MCSN-060-TANS

SINGLE ACTING ONE FLANGED PORT

ATLANTIC Fluid Tech

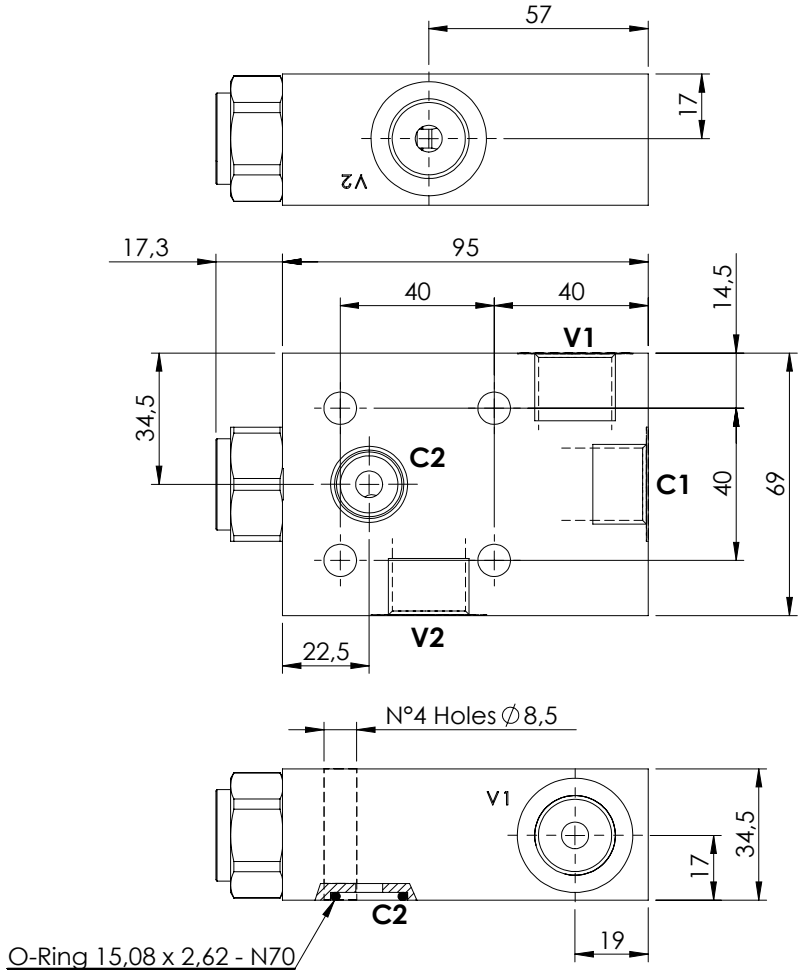

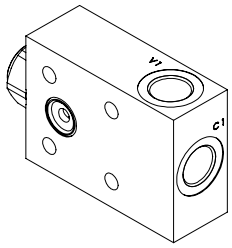

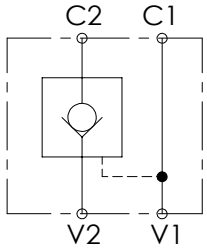

SPECIFICATIONS

Max. operating pressure:	**350 bar**
Rated flow:	**60 l/min**
Manifold:	**Aluminium**
Weight:	**0,66 kg**

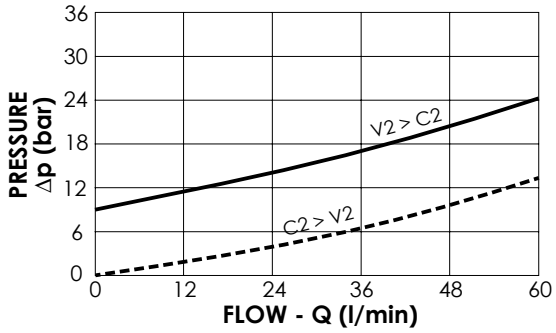

ORDERING CODES

Quick code	Description	Main ports size	Pilot ratio	Cracking pressure (bar)	O-Ring on pilot piston
MC000080	**MCSN-060-TANS-03-G12-N008**	V1,V2,C1: **G 1/2"** C2: ∅ **7**	**3:1**	**8**	**NO**
MC000077	**MCSN-060-TANC-03-G12-N008**	V1,V2,C1: **G 1/2"** C2: ∅ **7**	**3:1**	**8**	**YES**

PILOT OPERATED CHECK VALVE

MCSN-100-TLNS

SINGLE ACTING

ATLANTIC Fluid Tech

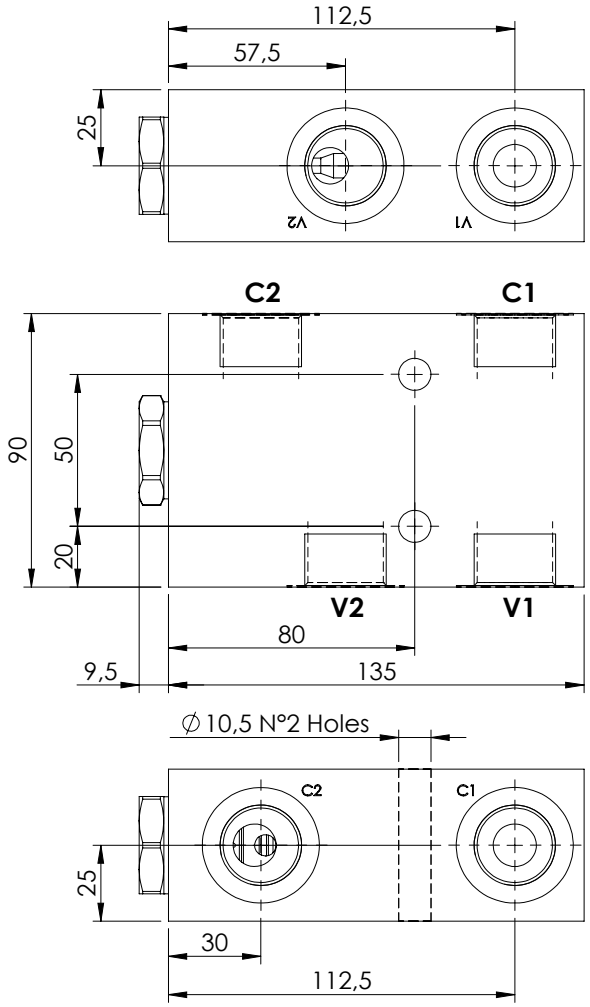

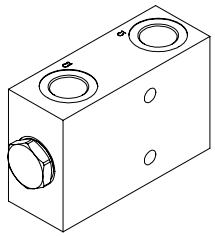

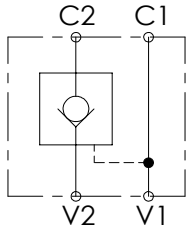

SPECIFICATIONS

Max. operating pressure:	**350 bar**
Rated flow:	**100 l/min**
Manifold:	**Aluminium**
Weight:	**1,5 kg**

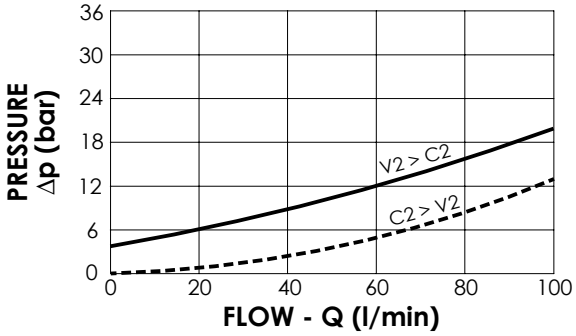

ORDERING CODES

Quick code	Description	Main ports size	Pilot ratio	Cracking pressure (bar)	O-Ring on pilot piston
MC000148	**MCSN-100-TLNS-04-G34-N004**	V1,V2,C1,C2 : **G 3/4"**	**4:1**	**4**	**NO**

PILOT OPERATED CHECK VALVE

MCSN-020-TLLC

SINGLE ACTING
MANUAL SHUT OFF
LEFT VERSION

ATLANTIC Fluid Tech

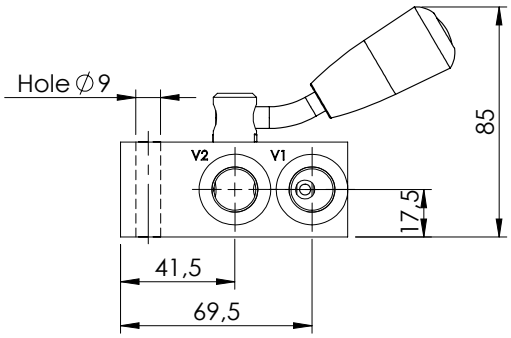

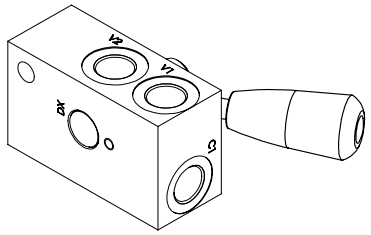

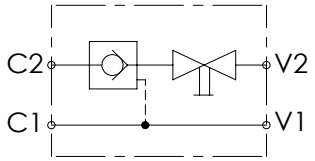

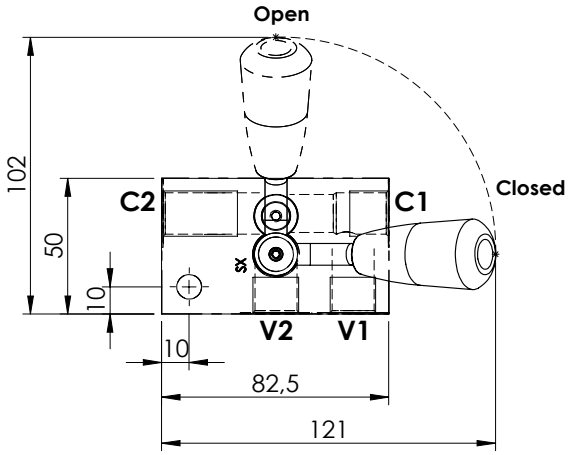

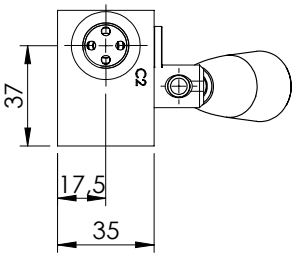

SPECIFICATIONS

Max. operating pressure:	**350 bar**
Rated flow:	**20 l/min**
Manifold:	**Aluminium**
Weight:	**0,45 kg**

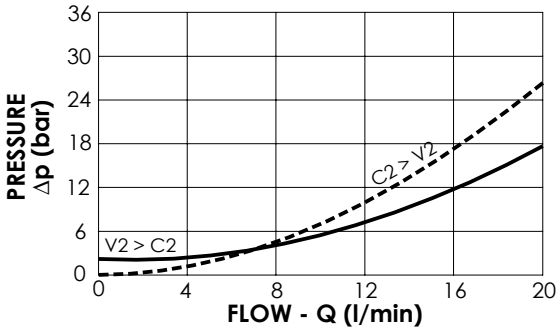

ORDERING CODES

Quick code	Description	Main ports size	Pilot ratio	Cracking pressure (bar)	O-Ring on pilot piston
MC000062	**MCSN-020-TLLC-05-G38-N002**	V1,V2,C1,C2 : **G 3/8"**	**5:1**	**2**	**YES**

PILOT OPERATED CHECK VALVE

MCSN-020-TLRC

SINGLE ACTING
MANUAL SHUT OFF
RIGHT VERSION

ATLANTIC Fluid Tech

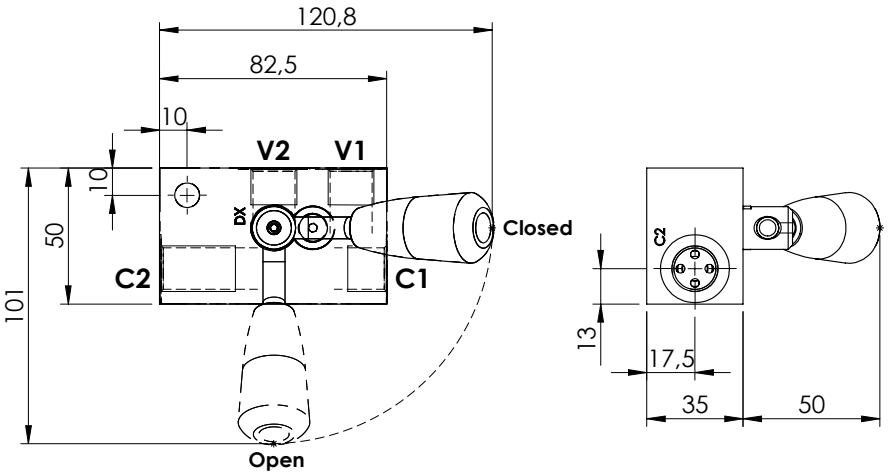

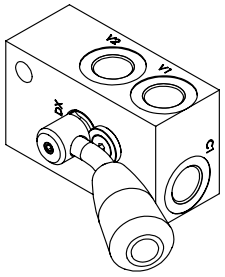

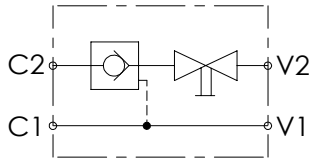

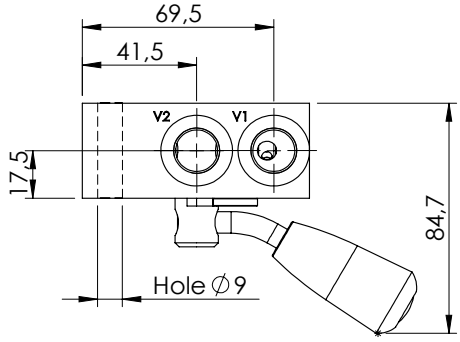

SPECIFICATIONS

Max. operating pressure:	**350 bar**
Rated flow:	**20 l/min**
Manifold:	**Aluminium**
Weight:	**0,45 kg**

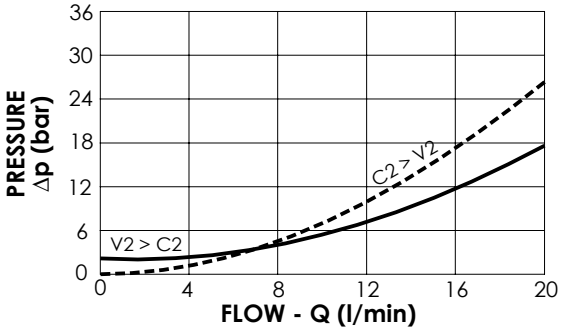

ORDERING CODES

Quick code	Description	Main ports size	Pilot ratio	Cracking pressure (bar)	O-Ring on pilot piston
MC000061	**MCSN-020-TLRC-05-G38-N002**	V1,V2,C1,C2 : **G 3/8"**	**5:1**	**2**	**YES**

PILOT OPERATED CHECK VALVE

MCDN-020-SLAS

DOUBLE ACTING

ATLANTIC Fluid Tech

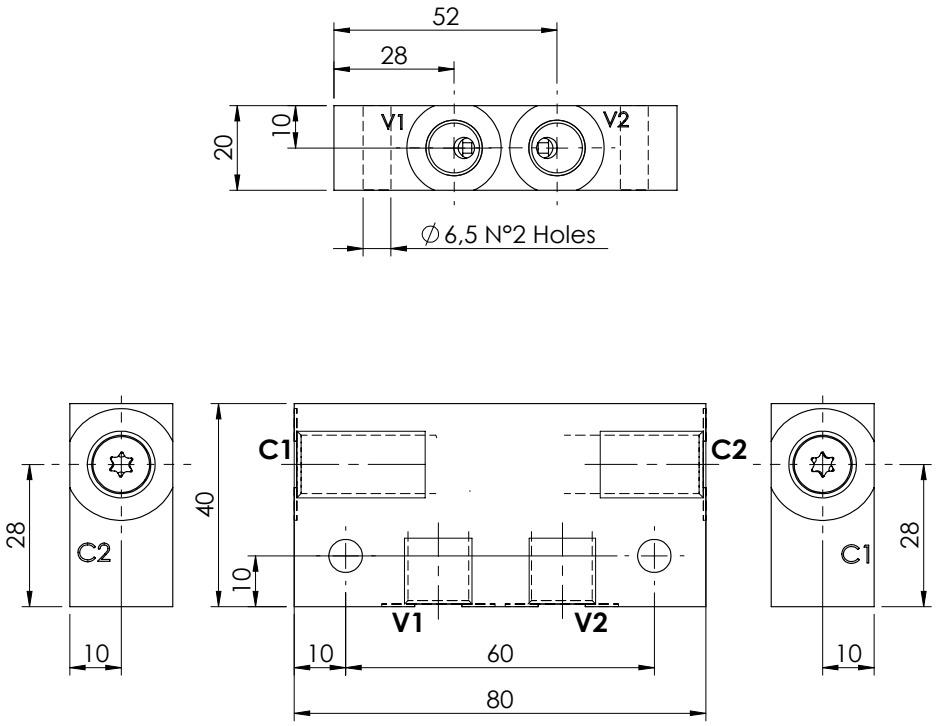

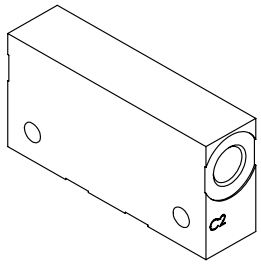

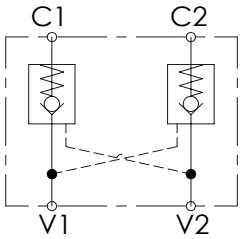

SPECIFICATIONS

Max. operating pressure:	**350 bar**
Rated flow:	**20 l/min**
Manifold:	**Steel**
Weight:	**0,42 kg**

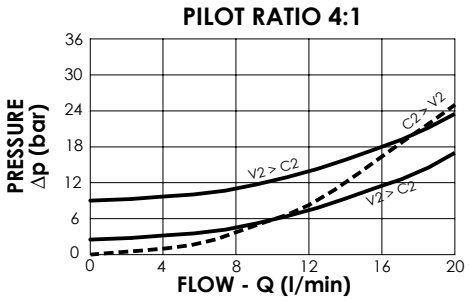

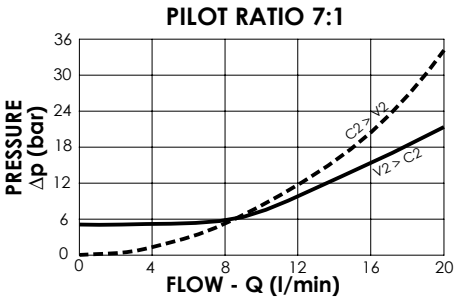

ORDERING CODES

Quick code	Description	Main ports size	Pilot ratio	Craking pressure (bar)	O-Ring on pilot piston
MC000113	**MCDN-020-SLAS-04-G14-N003**	V1,V2,C1,C2 : **G 1/4"**	**4:1**	**3**	**NO**
MC000160	**MCDN-020-SLAS-04-G14-N008**	V1,V2,C1,C2 : **G 1/4"**	**4:1**	**8**	**NO**
MC000227	**MCDN-020-SLAS-07-G14-N005**	V1,V2,C1,C2 : **G 1/4"**	**7:1**	**5**	**NO**

PILOT OPERATED CHECK VALVE

MCDN-020-SLAS

DOUBLE ACTING

ATLANTIC Fluid Tech

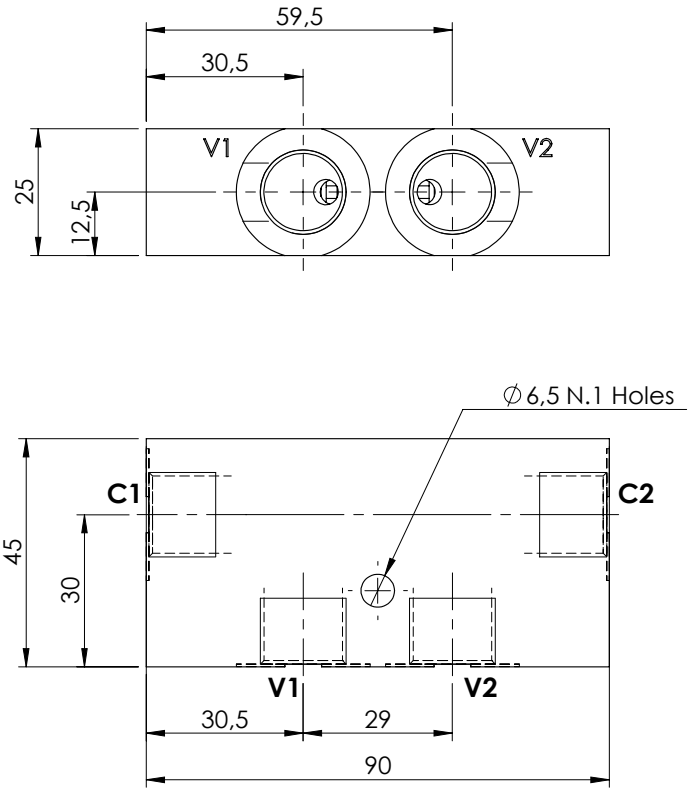

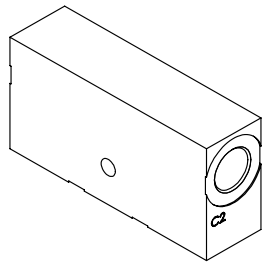

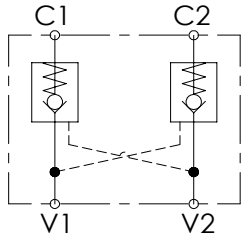

SPECIFICATIONS

Max. operating pressure:	**350 bar**
Rated flow:	**20 l/min**
Manifold:	**Steel**
Weight:	**0,67 kg**

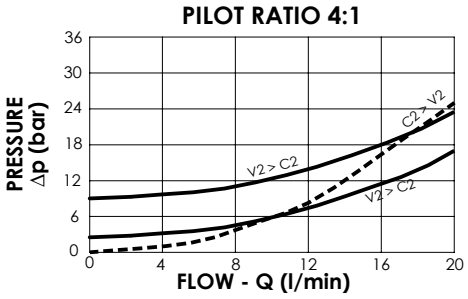

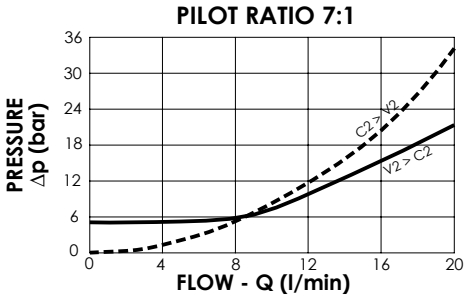

ORDERING CODES

Quick code	Description	Main ports size	Pilot ratio	Cracking pressure (bar)	O-Ring on pilot piston
MC000174	**MCDN-020-SLAS-04-G38-N003**	V1,V2,C1,C2 : **G 3/8"**	**4:1**	**3**	**NO**
MC000213	**MCDN-020-SLAS-04-G38-N009**	V1,V2,C1,C2 : **G 3/8"**	**4:1**	**9**	**NO**
MC000212	**MCDN-020-SLAS-04-G38-N005**	V1,V2,C1,C2 : **G 3/8"**	**7:1**	**5**	**NO**

PILOT OPERATED CHECK VALVE

MCDN-020-SLGS

DOUBLE ACTING WITH BANJO

ATLANTIC Fluid Tech

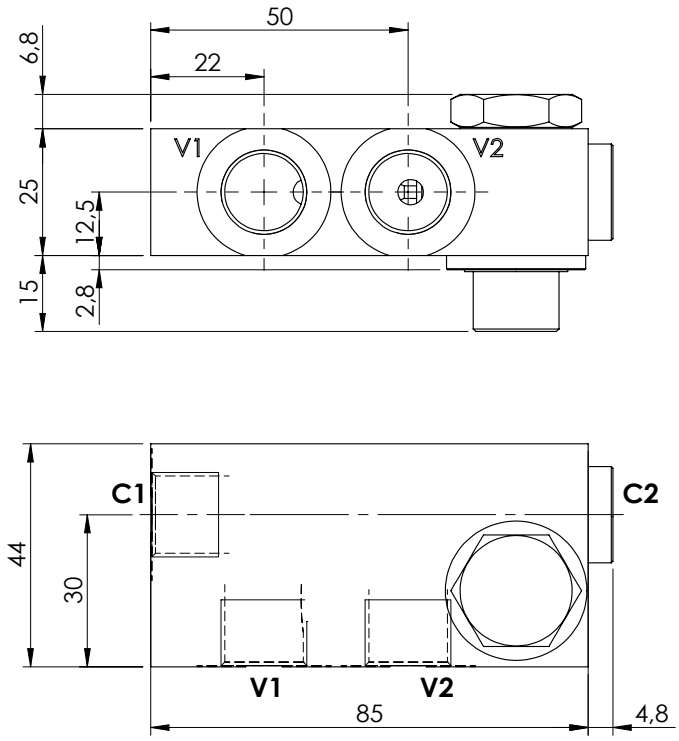

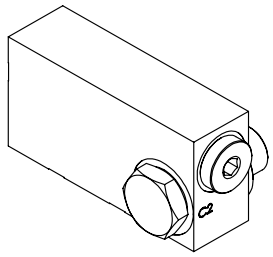

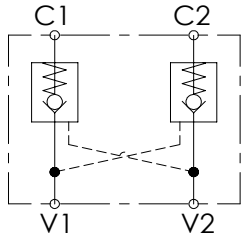

SPECIFICATIONS

Max. operating pressure:	350 bar
Rated flow:	20 l/min
Manifold:	Steel
Weight:	0,68 kg

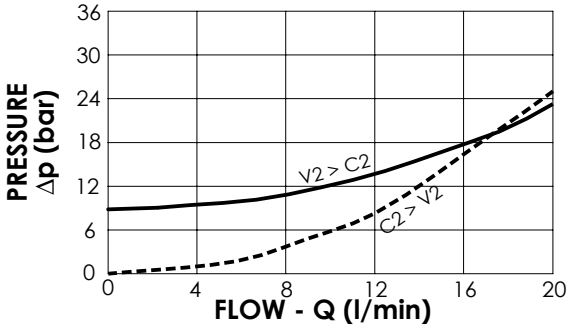

ORDERING CODES

Quick code	Description	Main ports size	Pilot ratio	Cracking pressure (bar)	O-Ring on pilot piston
MC000208	**MCDN-020-SLGS-04-G38-N010**	V1,V2,C1,C2 : **G 3/8"**	**4:1**	**10**	**NO**

PILOT OPERATED CHECK VALVE

MCDN-030-TLNS

DOUBLE ACTING

ATLANTIC Fluid Tech

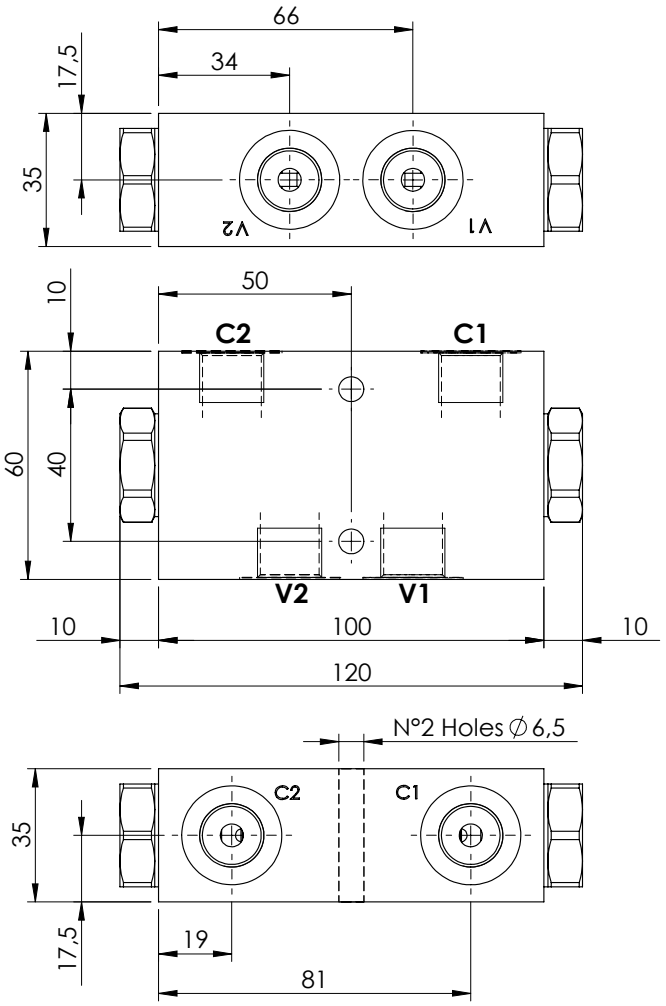

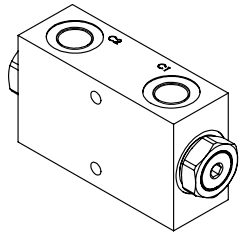

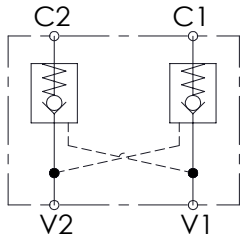

SPECIFICATIONS

Max. operating pressure:	**350 bar**
Rated flow:	**30 l/min**
Manifold:	**Aluminium**
Weight:	**0,67 kg**

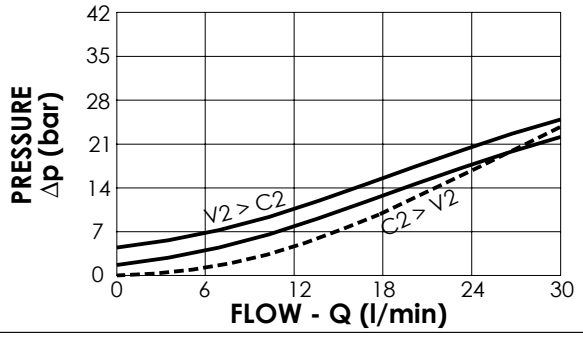

ORDERING CODES

Quick code	Description	Main ports size	Pilot ratio	Cracking pressure (bar)	O-Ring on pilot piston
MC000002	**MCDN-030-TLNS-07-G38-N001**	V1,V2,C1,C2 : **G 3/8"**	**7:1**	**1**	**NO**
MC000009	**MCDN-030-TLNS-07-G38-N005**	V1,V2,C1,C2 : **G 3/8"**	**7:1**	**5**	**NO**
MC000010	**MCDN-030-TLNC-07-G38-N005**	V1,V2,C1,C2 : **G 3/8"**	**7:1**	**5**	**YES**

PILOT OPERATED CHECK VALVE

MCDN-030-ZBNS

DOUBLE ACTING TWO FLANGED PORTS

ATLANTIC Fluid Tech

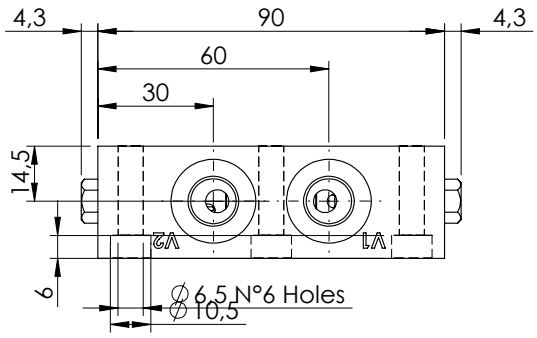

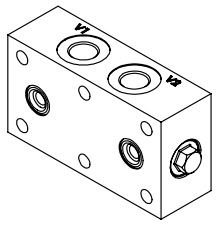

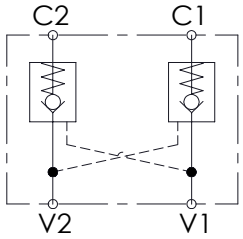

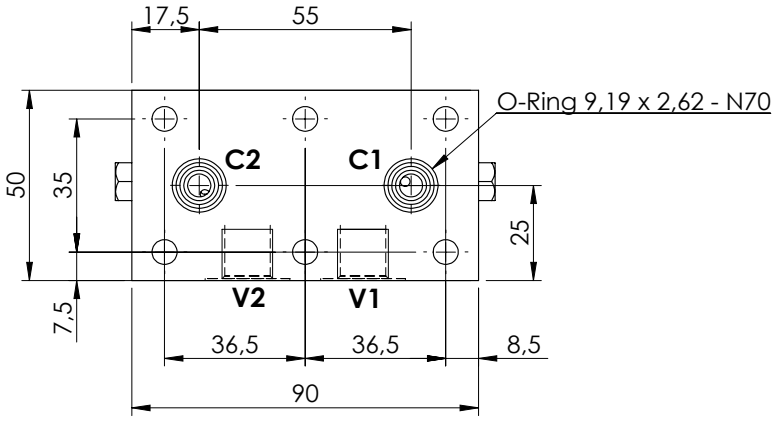

SPECIFICATIONS

Max. operating pressure:	**350 bar**
Rated flow:	**30 l/min**
Manifold:	**Aluminium**
Weight:	**0,67 kg**

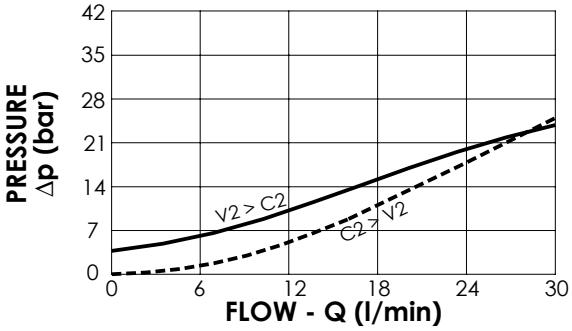

ORDERING CODES

Quick code	Description	Main ports size	Pilot ratio	Cracking pressure (bar)	O-Ring on pilot piston
MC000086	**MCDN-030-ZBNS-04-G14-N004**	V1,V2:**G 1/4"** C1,C2: ∅ **6**	**4:1**	**4**	**NO**

PILOT OPERATED CHECK VALVE

MCDN-030-TBNS

DOUBLE ACTING
TWO FLANGED PORTS

ATLANTIC Fluid Tech

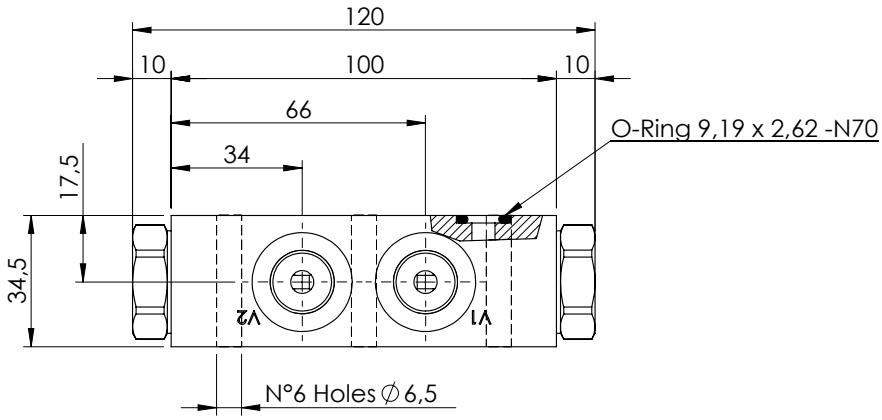

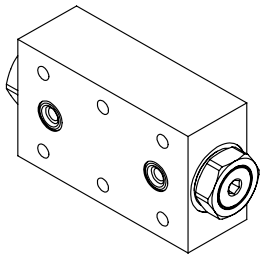

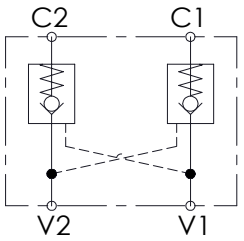

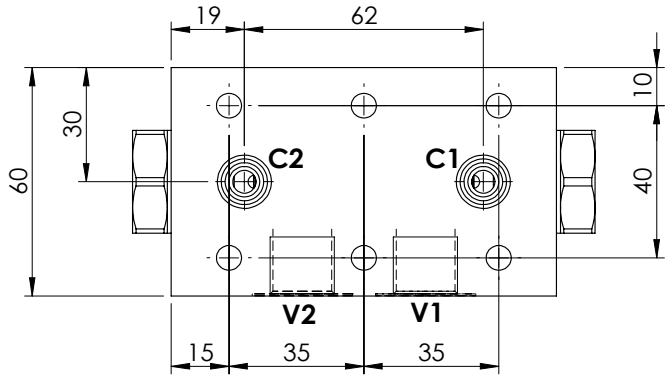

SPECIFICATIONS

Max. operating pressure:	**350 bar**
Rated flow:	**30 l/min**
Manifold:	**Aluminium**
Weight:	**0,67 kg**

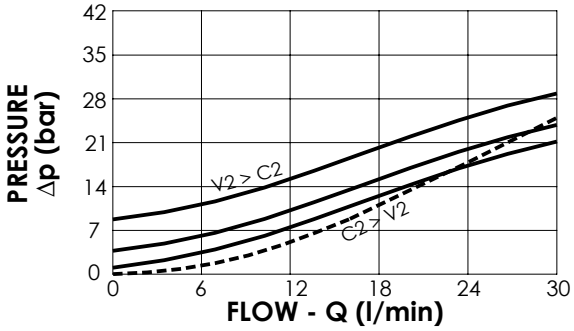

ORDERING CODES

Quick code	Description	Main ports size	Pilot ratio	Cracking pressure (bar)	O-Ring on pilot piston
MC000005	**MCDN-030-TBNS-07-G38-N001**	V1,V2:**G 3/8"** C1,C2: ∅**6**	**7:1**	**1**	**NO**
MC000012	**MCDN-030-TBNS-07-G38-N005**	V1,V2:**G 3/8"** C1,C2: ∅**6**	**7:1**	**5**	**NO**
MC000020	**MCDN-030-TBNC-07-G38-N005**	V1,V2:**G 3/8"** C1,C2: ∅**6**	**7:1**	**5**	**YES**
MC000092	**MCDN-030-TBNS-07-G38-N009**	V1,V2:**G 3/8"** C1,C2: ∅**6**	**7:1**	**9**	**NO**
MC000195	**MCDN-030-TBNC-07-G38-N009**	V1,V2:**G 3/8"** C1,C2: ∅**6**	**7:1**	**9**	**YES**

PILOT OPERATED CHECK VALVE

MCDN-030-SBNS

DOUBLE ACTING TWO FLANGED PORTS

ATLANTIC Fluid Tech

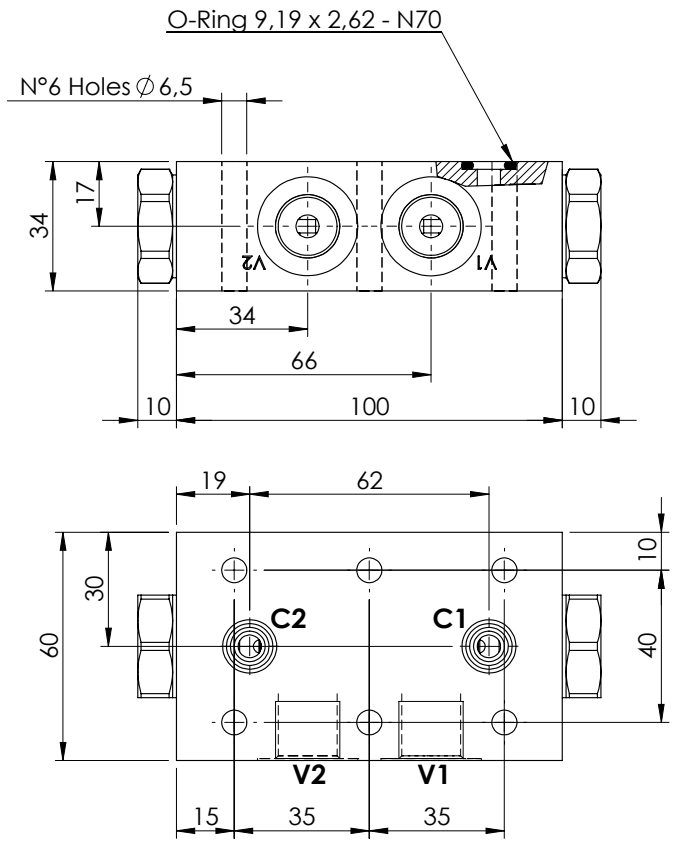

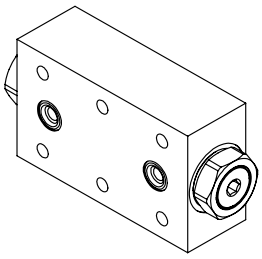

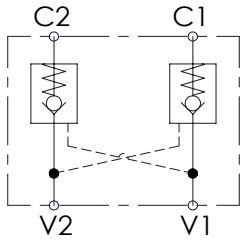

SPECIFICATIONS

Max. operating pressure:	**350 bar**
Rated flow:	**30 l/min**
Manifold:	**Steel**
Weight:	**1,49 kg**

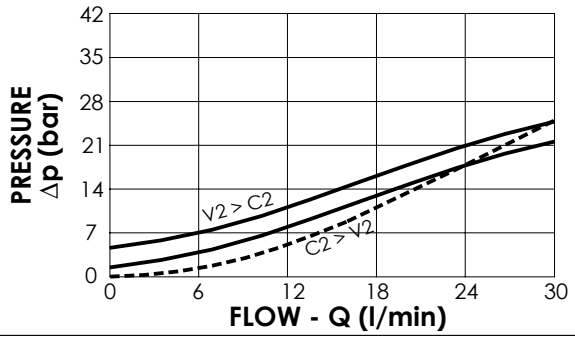

ORDERING CODES

Quick code	Description	Main ports size	Pilot ratio	Cracking pressure (bar)	O-Ring on pilot piston
MC000036	**MCDN-030-SBNS-07-G38-N005**	V1,V2:**G 3/8"** C1,C2: ∅ **6**	**7:1**	**5**	**NO**
MC000037	**MCDN-030-SBNC-07-G38-N005**	V1,V2:**G 3/8"** C1,C2: ∅ **6**	**7:1**	**5**	**YES**
MC000038	**MCDN-030-SBNS-07-G38-N001**	V1,V2:**G 3/8"** C1,C2: ∅ **6**	**7:1**	**1**	**NO**

PILOT OPERATED CHECK VALVE

MCDN-060-TLNS

DOUBLE ACTING

ATLANTIC Fluid Tech

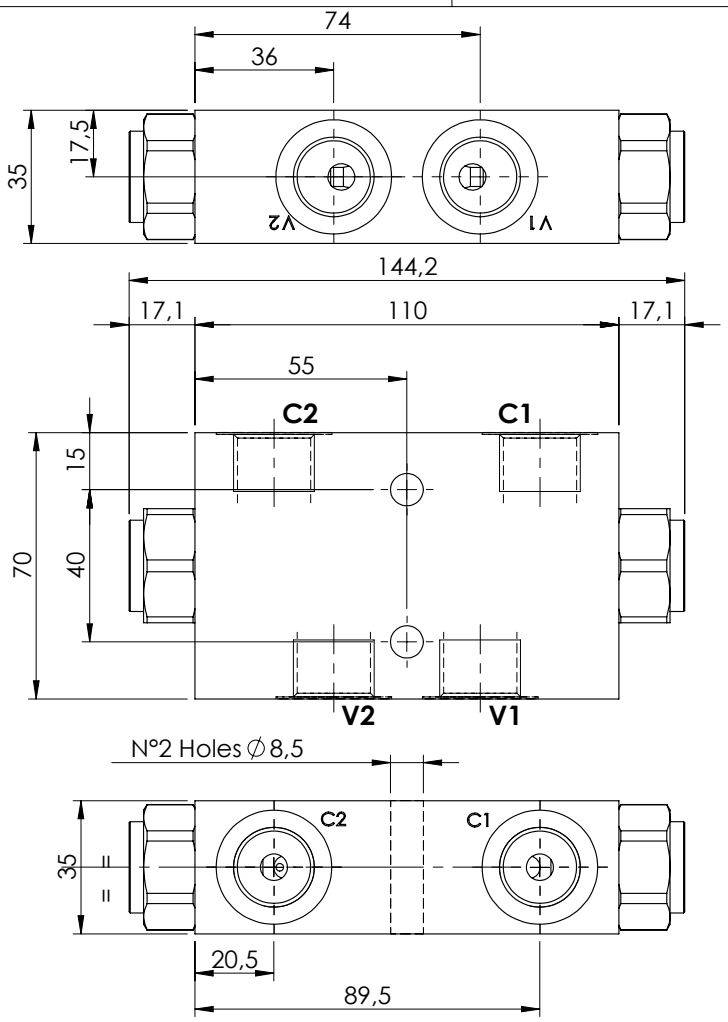

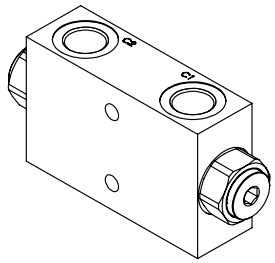

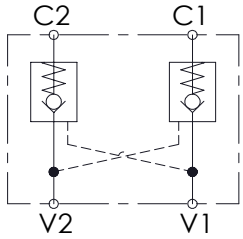

SPECIFICATIONS

Max. operating pressure:	**350 bar**
Rated flow:	**60 l/min**
Manifold:	**Aluminium**
Weight:	**0,9 kg**

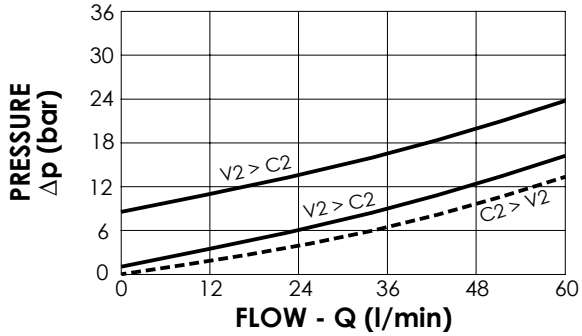

ORDERING CODES

Quick code	Description	Main ports size	Pilot ratio	Cracking pressure (bar)	O-Ring on pilot piston
MC000042	**MCDN-060-TLNS-03-G12-N001**	V1,V2,C1,C2 : **G1/2"**	**3:1**	**1**	**NO**
MC000040	**MCDN-060-TLNS-03-G12-N008**	V1,V2,C1,C2 : **G1/2"**	**3:1**	**8**	**NO**
MC000041	**MCDN-060-TLNC-03-G12-N008**	V1,V2,C1,C2 : **G1/2"**	**3:1**	**8**	**YES**

PILOT OPERATED CHECK VALVE

MCDN-060-TBNS

DOUBLE ACTING TWO FLANGED PORTS

ATLANTIC Fluid Tech

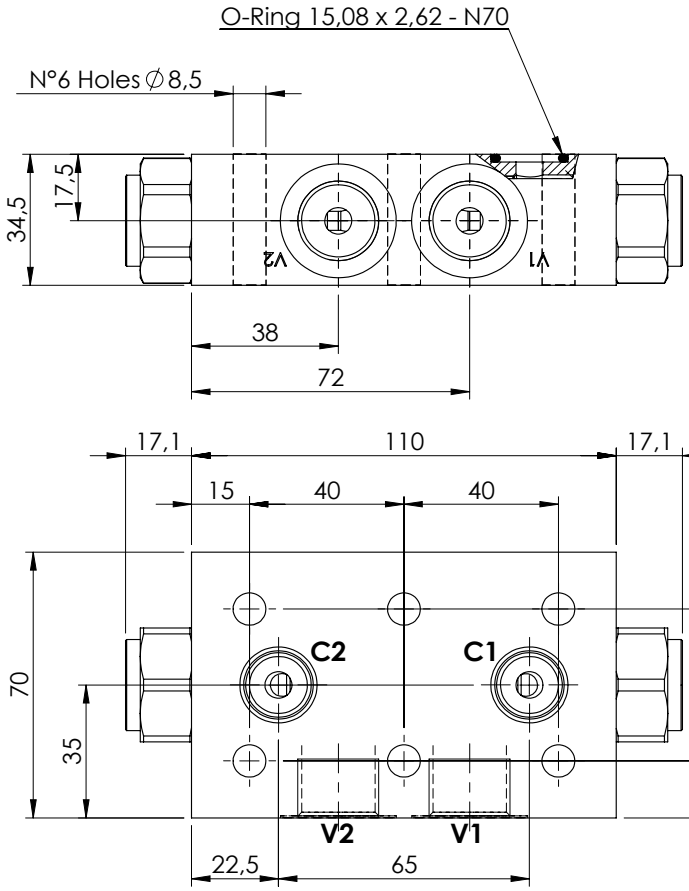

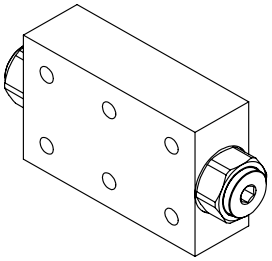

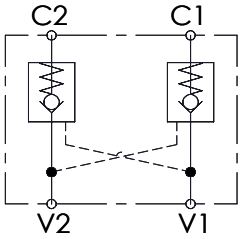

SPECIFICATIONS

Max. operating pressure:	350 bar
Rated flow:	60 l/min
Manifold:	Aluminium
Weight:	0,90 kg

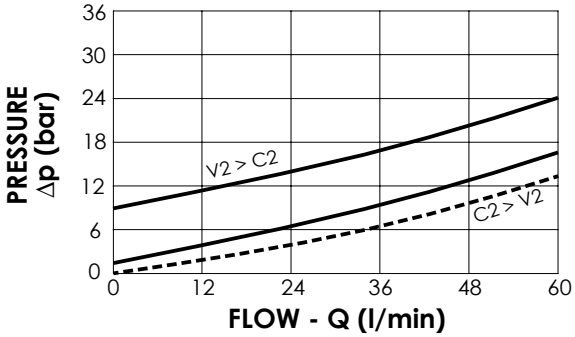

ORDERING CODES

Quick code	Description	Main ports size	Pilot ratio	Cracking pressure (bar)	O-Ring on pilot piston
MC000029	**MCDN-060-TBNS-03-G12-N001**	V1,V2:**G 1/2"** C1,C2: ∅**7**	**3:1**	**1**	**NO**
MC000027	**MCDN-060-TBNS-03-G12-N008**	V1,V2:**G 1/2"** C1,C2: ∅**7**	**3:1**	**8**	**NO**
MC000028	**MCDN-060-TBNC-03-G12-N008**	V1,V2:**G 1/2"** C1,C2: ∅**7**	**3:1**	**8**	**YES**
MC000026	**MCDN-060-TBNS-06-G12-N001**	V1,V2:**G 1/2"** C1,C2: ∅**7**	**6:1**	**1**	**NO**
MC000025	**MCDN-060-TBNS-06-G12-N008**	V1,V2:**G 1/2"** C1,C2: ∅**7**	**6:1**	**8**	**NO**
MC000022	**MCDN-060-TBNC-06-G12-N008**	V1,V2:**G 1/2"** C1,C2: ∅**7**	**6:1**	**8**	**YES**

PILOT OPERATED CHECK VALVE

MCDN-100-LLNR

DOUBLE ACTING

ATLANTIC Fluid Tech

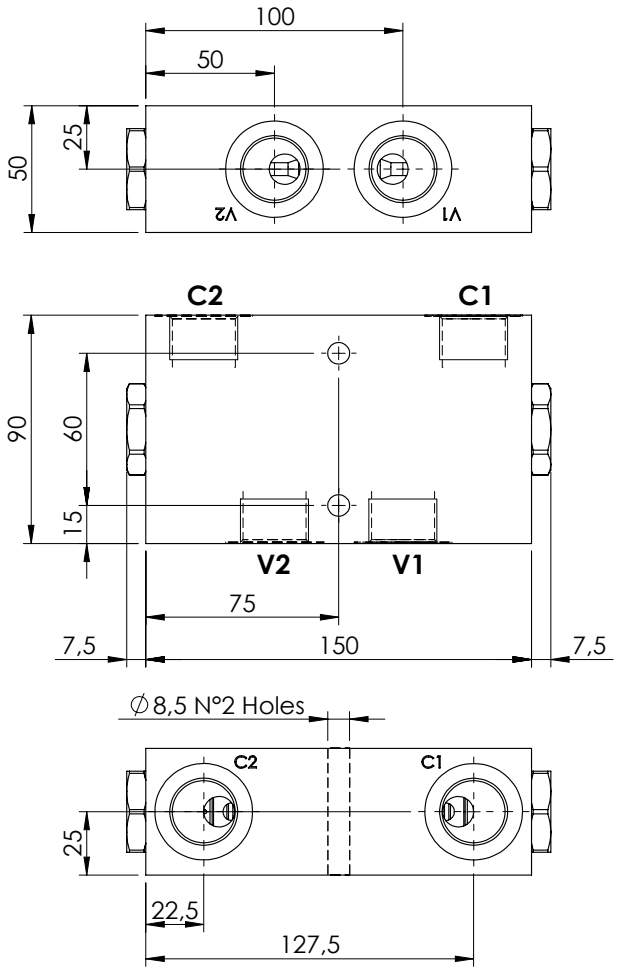

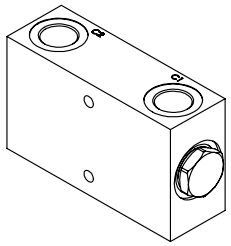

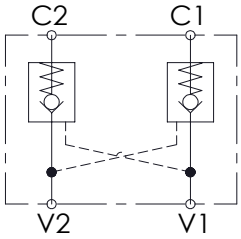

SPECIFICATIONS

Max. operating pressure:	**350 bar**
Rated flow:	**100 l/min**
Manifold:	**Aluminium**
Weight:	**1,8 kg**

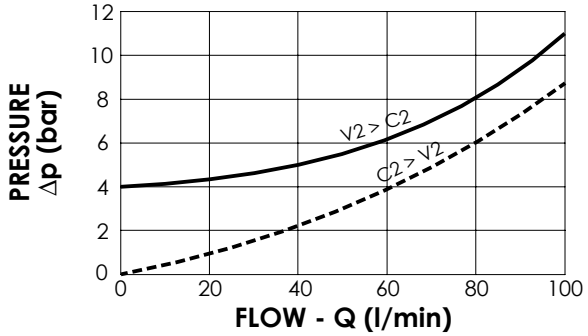

ORDERING CODES

Quick code	Description	Main ports size	Pilot ratio	Cracking pressure (bar)	O-Ring on pilot piston
MC000144	**MCDN-100-LLNR-04-G34-N004**	V1,V2,C1,C2 : **G3/4"**	**4:1**	**4**	**NO**

ATLANTIC
Fluid Tech

SECTION 6

Overcenter Valves

MANAGEMENT SYSTEM CERTIFICATION
DNV·GL
ISO 9001 = ISO 14001
OHSAS 18001

OVERCENTRE VALVES

ATLANTIC Fluid Tech

Hydraulic scheme	Valve description	Valve type	Rated flow (l/min)	Max. pressure (bar)	Installation	Main port size or cavity type	Page
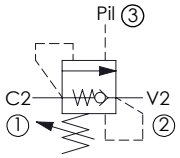	CBSN-030-PARH	Poppet type	30	350	Cartridge	SAE-08-3C	6.01.**010**
	CBSN-040-DCNH	Differential area	40	350	Cartridge	VP000174	6.01.**020**
	CBSN-060-DARH	Poppet type, differential area	60	350	Cartridge	SAE-10-3C	6.01.**030**
	CBSN-060-DSRH	Poppet type, differential area	60	350	Cartridge	VP000161 (T-11A)	6.01.**040**
	CBSN-060-DCNH	Differential area	60	350	Cartridge	VP000121	6.01.**050**
	CBSN-100-DCNH	Differential area	100	350	Cartridge	VP000120	6.01.**060**
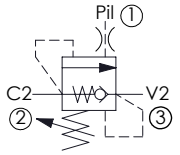	CBSN-120-DSRH	Poppet type, differential area	120	350	Cartridge	VP000165 (T-2A)	6.01.**070**
	CBSN-120-DAGH	Poppet type, differential area	120	350	Cartridge	SAE-12-3C	6.01.**080**
	CBSN-150-DCNH	Differential area	150	350	Cartridge	VP000128	6.01.**090**
	CBSN-240-DSGH	Poppet type, differential area	240	420	Cartridge	VP000166 (T-17A)	6.01.**100**
	CBSN-300-DCNH	Differential area	300	350	Cartridge	VP000127	6.01.**110**
	CBSN-320-DARH	Poppet type, differential area	320	420	Cartridge	SAE-20-3C	6.01.**120**
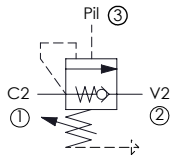	CBST-030-PARH	Poppet type, fully compensated	30	350	Cartridge	SAE-08-3C	6.03.**130**
	CBST-040-DCNH	Differential area, relief and pilot compensated	40	350	Cartridge	VP000174	6.03.**140**
	CBST-100-DCNH	Differential area, relief and pilot compensated	100	350	Cartridge	VP000120	6.03.**150**
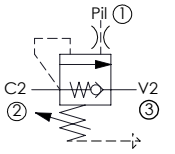	CBST-150-DCNH	Differential area, relief and pilot compensated	150	350	Cartridge	VP000128	6.03.**160**
	CBST-300-DCNH	Differential area, relief and pilot compensated	300	350	Cartridge	VP000127	6.03.**170**
	MBSN-040-ALNP	Single acting	40	350	In line	G 1/4"	6.04.**180**
	MBSN-040-ZLNA	Single acting	40	350	In line	G 3/8"	6.04.**190**
	MBSN-040-AANP	Single acting,one flanged ports	40	350	In line	G 1/4"	6.04.**200**
	MBSN-040-ZDNA	Single acting,all flanged ports	40	350	In line	Ø 8	6.04.**210**
	MBSN-040-APNR	Single acting,banjo mounting	40	350	In line	G 3/8"	6.04.**220**
	MBSN-060-ALNR	Single acting	60	350	In line	G 3/8"	6.04.**230**
	MBSN-060-ALNE	Single acting	60	350	In line	G 3/8"	6.04.**240**
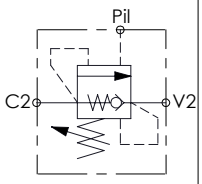	MBSN-060-ZLSE	Single acting	60	350	In line	G1/2"	6.04.**250**
	MBSN-060-ALNE	Single acting	60	350	In line	G 1/2"	6.04.**260**
	MBSN-060-ZLNA	Single acting, in line ports	60	350	In line	G 1/2"	6.04.**270**
	MBSN-060-AANR	Single acting, one flanged port	60	350	Flanged	G 3/8"	6.04.**280**
	MBSN-060-AATV	Single acting, one flanged port	60	350	Flanged	G 3/8"	6.04.**290**
	MBSN-060-ABNP	Single acting, two flanged ports	60	350	Flanged	G 3/8"	6.04.**300**
	MBSN-060-ABNP	Single acting, two flanged ports	60	350	Flanged	G 1/2"	6.04.**310**
	MBSN-150-ALNV	Single acting	150	350	In line	G 1/2"	6.04.**320**
	MBSN-150-ALNV	Single acting	150	350	In line	G 3/4"	6.04.**330**
	MBSN-150-AANV	Single acting, one flanged port	150	350	Flanged	G 3/4"	6.04.**340**
	MBSN-150-ABNV	Single acting, two flanged ports	150	350	Flanged	G 1/2"	6.04.**350**
	MBSN-150-ABNV	Single acting, two flanged ports	150	350	Flanged	G 3/4"	6.04.**360**
	MBSN-300-ZLNP	Single acting	300	350	In line	G 1"	6.04.**370**

OVERCENTRE VALVES

ATLANTIC Fluid Tech

Hydraulic scheme	Valve description	Valve type	Rated flow (l/min)	Max. pressure (bar)	Installation	Main port size or cavity type	Page
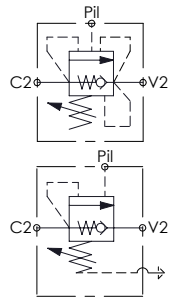	MBSP-060-ZLSE	Single acting,relief compensated	60	350	In line	G 3/8"	6.05.**380**
	MBSP-060-ALNP	Single acting,relief compensated	60	350	In line	G 3/8"	6.05.**390**
	MBSP-060-ALNE	Single acting,relief compensated	60	350	In line	G1/2"	6.05.**400**
	MBSP-060-ABNP	Single acting, two flanged ports,relief compens.	60	350	Flanged	G 3/8"	6.05.**410**
	MBSP-060-ABNP	Single acting, two flanged ports,relief compens.	60	350	Flanged	G 1/2"	6.05.**420**
	MBSP-150-ZLSE	Single acting	150	350	In line	G 3/4"	6.05.**430**
	MBST-150-AANV	Single acting, one flanged port, relief compens.	150	350	Flanged	G 3/4"	6.06.**440**
	MBST-150-ABNV	Single acting, two flanged ports, fully compens.	150	350	Flanged	G 1/2"	6.06.**450**
	MBST-150-ABNV	Single acting, two flanged ports, fully compens.	150	350	Flanged	G 3/4"	6.06.**460**
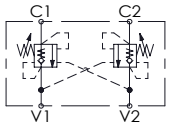	MBDN-040-ALNP	Double acting	40	350	In line	G 1/4"	6.07.**470**
	MBDN-040-ALNR	Double acting	40	350	In line	G 1/4"	6.07.**480**
	MBDN-040-ZLNN	Double acting	40	350	In line	G 3/8"	6.07.**490**
	MBDN-040-AANR	Double acting, one flanged port	40	350	Flanged	G 1/4"	6.07.**500**
	MBDN-040-ABNP	Double acting, two flanged ports	40	350	Flanged	G 1/4"	6.07.**510**
	MBDN-040-ABNR	Double acting, two flanged ports	40	350	Flanged	G 1/4"	6.07.**520**
	MBDN-040-ABNV	Double acting, two flanged ports	40	350	Flanged	G 3/8"	6.07.**530**
	MBDN-040-ZBNN	Double acting, two flanged ports	40	350	Flanged	G 3/8"	6.07.**540**
	MBDN-040-ZDNA	Double acting, all flanged ports	40	350	Flanged	Ø 8	6.07.**550**
	MBDN-060-ALNR	Double acting	60	350	In line	G 3/8"	6.07.**560**
	MBDN-060-ALNR	Double acting	60	350	In line	G 1/2"	6.07.**570**
	MBDN-060-ZLDE	Double acting	60	350	In line	G 1/2"	6.07.**580**
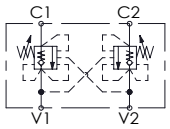	MBDN-060-AANR	Double acting, one flanged port	60	350	Flanged	G 3/8"	6.07.**590**
	MBDN-060-ABNR	Double acting, two flanged ports	60	350	Flanged	G 3/8"	6.07.**600**
	MBDN-060-ABNR	Double acting, two flanged ports	60	350	Flanged	G 1/2"	6.07.**610**
	MBDN-060-ZDNA	Double acting, all flanged ports	60	350	Flanged	Ø10	6.07.**620**
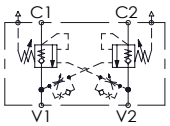	MBDN-100-ALDE	Double acting	100	350	In line	G 1/2"	6.07.**630**
	MBDN-100-ABNR	Double acting, two flanged ports	100	350	Flanged	Ø9	6.07.**640**
	MBDN-150-ZLDE	Double acting	150	350	In line	G 3/4"	6.07.**650**
	MBDN-150-ZLNP	Double acting	150	350	In line	G 3/4"	6.07.**660**
	MBDN-150-ZBNV	Double acting, two flanged ports	150	350	Flanged	G 3/4"	6.07.**670**
	MBDN-300-ZLNR	Double acting	150	350	In line	G 1"	6.07.**680**
	MBDP-060-ALNR	Double acting, relief compensated	60	350	In line	G 3/8"	6.08.**690**
	MBDP-060-ALNR	Double acting, relief compensated	60	350	In line	G 1/2"	6.08.**700**
	MBDP-060-ZLDE	Double acting, relief compensated	60	350	In line	G 1/2"	6.08.**710**
	MBDP-150-ZLDE	Double acting, relief compensated	150	350	In line	G 3/4"	6.08.**720**
	MBDT-150-ZBNV	Double acting, two flanged ports, fully compens.	150	350	Flanged	G 3/4"	6.09.**730**
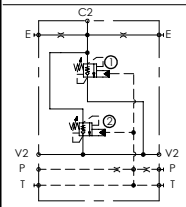	MBDN-500-ABNR	Double acting	500	420	Flanged	1 1/4" SAE 6000	6.10.**740**
	MBDN-500-ABNR	Double acting	500	420	Flanged	1 1/4" SAE 6000	6.10.**750**

OVERCENTRE VALVE

CBSN-030-PARH

POPPET TYPE

ATLANTIC Fluid Tech

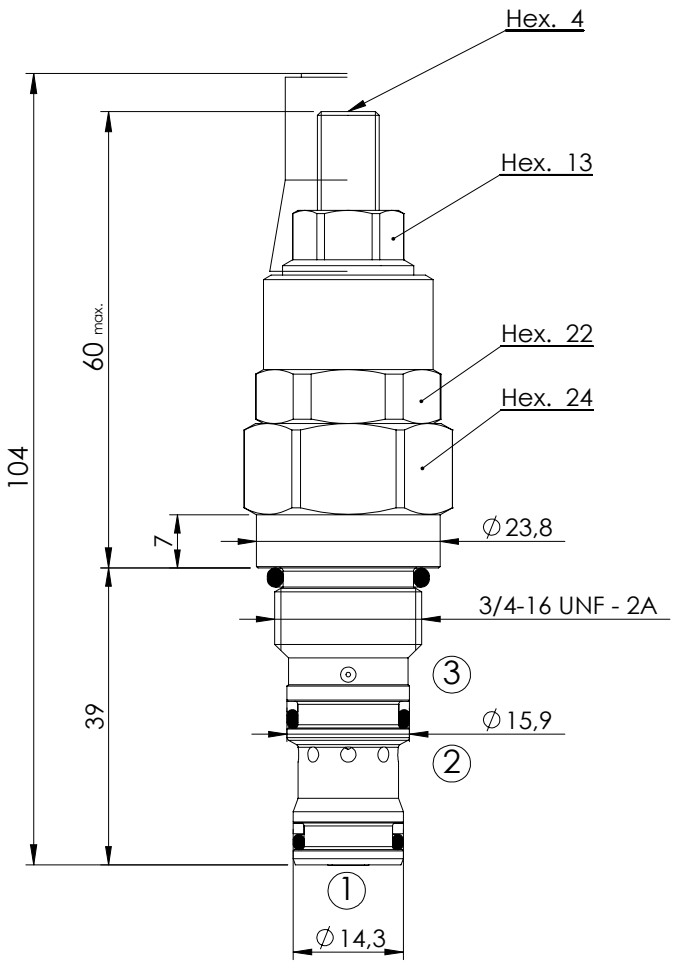

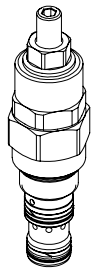

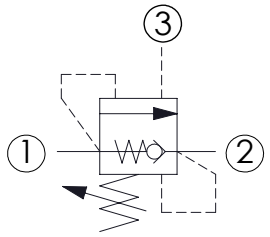

SPECIFICATIONS

Max. operating pressure:	350 bar
Rated flow:	30 l/min
Cavity:	SAE-08-3C
Weight:	0,18 kg

SEALING CAP

Ordering code:

AT000020

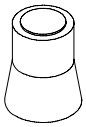

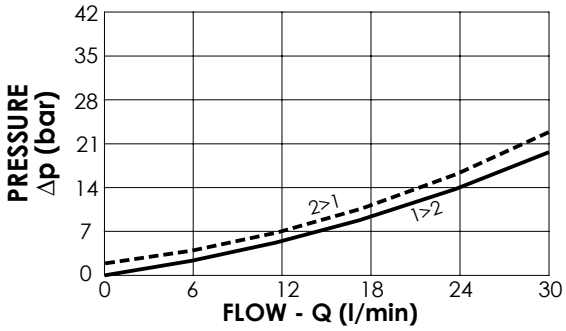

NOTES

Setting: at least 1.3 times the load induced pressure

Installation torque: 45 - 50 Nm

ORDERING CODES

Quick code	Description	Pilot ratio	Standard setting (bar, Q=5 l/min)	Adjust. range (bar)	Pressure increase (bar/turn)
CB000007	CBSN-030-PARH-04-S08-N350	4:1	350	170 - 350	134
CB000023	CBSN-030-PARH-04-S08-N200	4:1	200	70-210	110

OVERCENTRE VALVE

CBSN-040-DCNH

DIFFERENTIAL AREA

ATLANTIC Fluid Tech

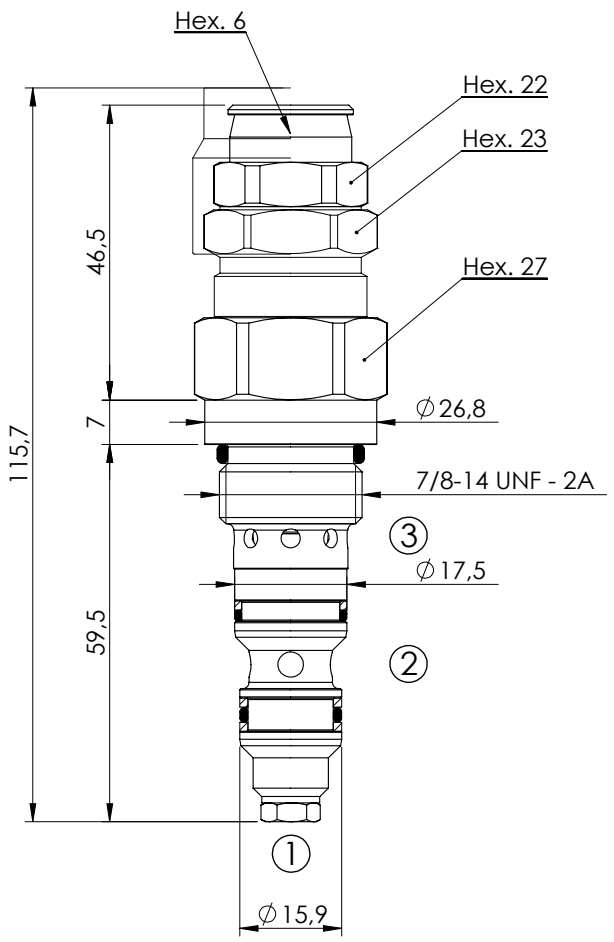

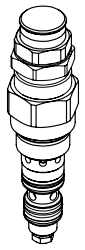

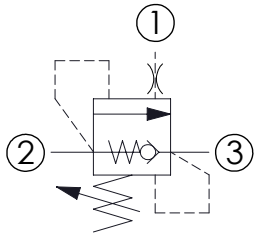

SPECIFICATIONS

Max. operating pressure:	350 bar
Rated flow:	40 l/min
Cavity:	VP000174
Weight:	0,26 kg

SEALING CAP

Ordering code:

PT000258

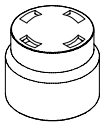

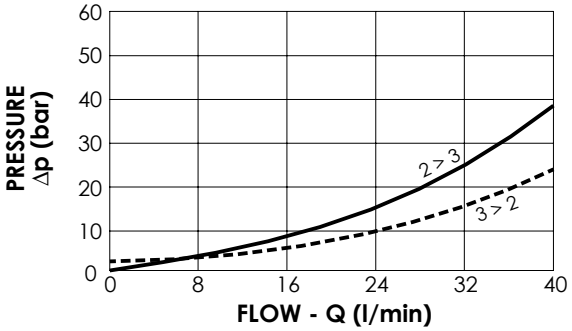

NOTES

Setting: at least 1.3 times the load induced pressure

Installation torque:

ORDERING CODES

Quick code	Description	Pilot ratio	Standard setting (bar, Q=5 l/min)	Adjust. range (bar)	Pressure increase (bar/turn)
CB000016	CBSN-040-DCNH-04-174-N350	4,1:1	350	100-350	145

OVERCENTRE VALVE

CBSN-060-DARH

POPPET TYPE DIFFERENTIAL AREA

ATLANTIC Fluid Tech

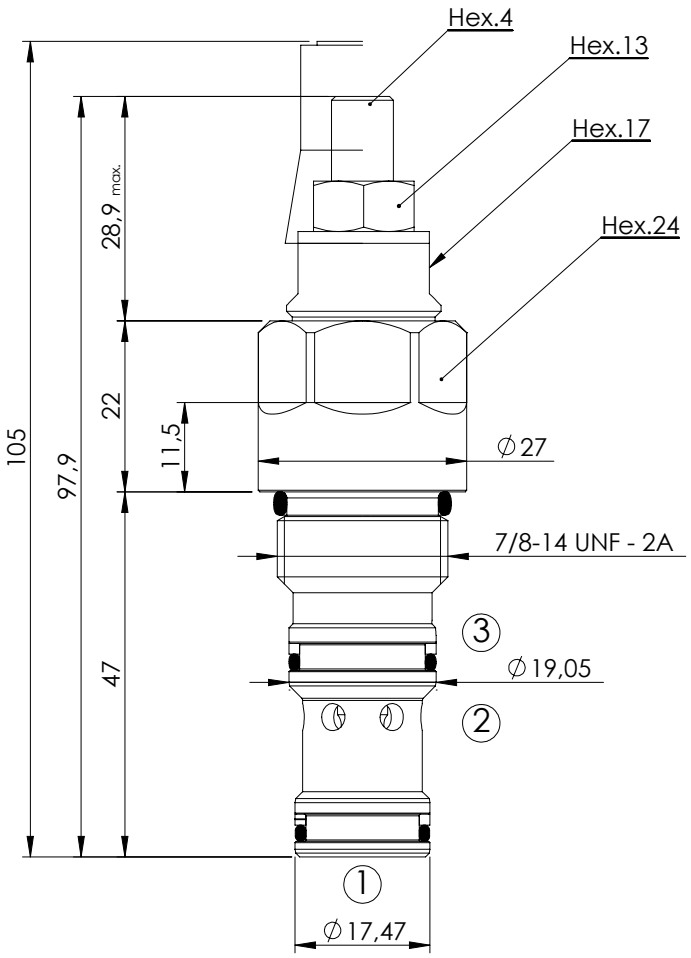

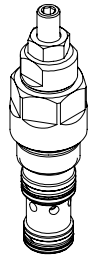

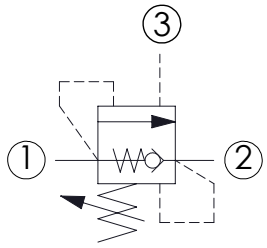

SPECIFICATIONS

Max. operating pressure:	350 bar
Rated flow:	60 l/min
Cavity:	
Weight:	0,2 kg

SEALING CAP

Ordering code:

AT000020

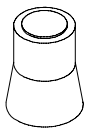

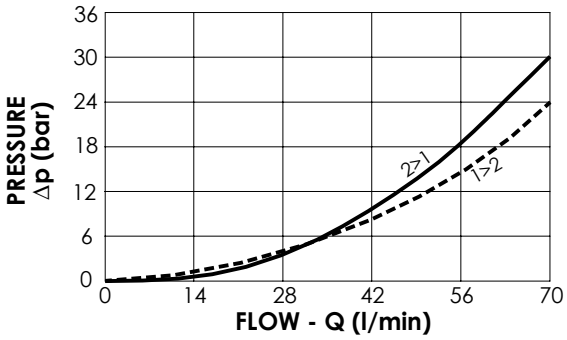

NOTES

Setting: at least 1.3 times the load induced pressure

Installation torque:

ORDERING CODES

Quick code	Description	Pilot ratio	Standard setting (bar, Q=5 l/min)	Adjust. range (bar)	Pressure increase (bar/turn)
CB000012	CBSN-060-DARH-03-S10-N350	3:1	350	140 - 350	197
CB000033	CBSN-060-DARH-03-S10-N200	3:1	200	70 - 210	147
CB000057	CBSN-060-DARH-08-S10-N350	8:1	350	140 - 350	93
CB000058	CBSN-060-DARH-08-S10-N200	8:1	200	70 - 210	55

OVERCENTRE VALVE

CBSN-060-DSRH

POPPET TYPE DIFFERENTIAL AREA

ATLANTIC Fluid Tech

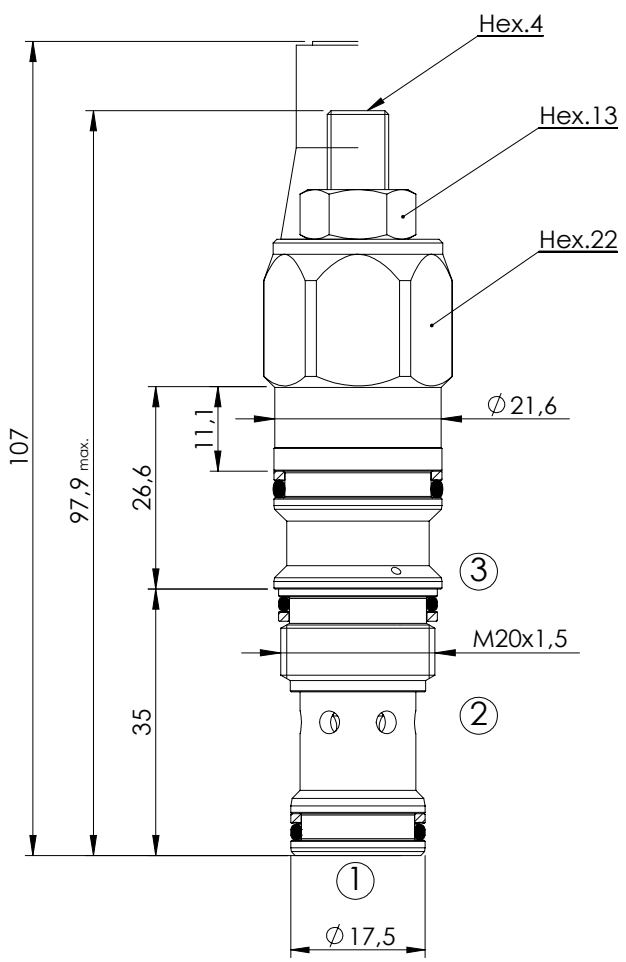

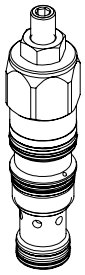

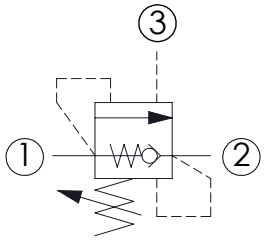

SPECIFICATIONS

Max. operating pressure:	350 bar
Rated flow:	60 l/min
Cavity:	VP000161 (SUN T-11A)
Weight:	0,18 kg

SEALING CAP

Ordering code:

AT000020

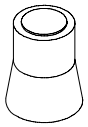

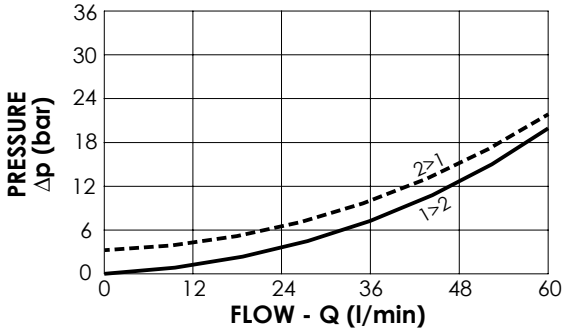

NOTES

Setting: at least 1.3 times the load induced pressure

Installation torque: 40 - 50 Nm

Turn anticlockwise to increase the setting

ORDERING CODES

Quick code	Description	Pilot ratio	Standard setting (bar, Q=5 l/min)	Adjust. range (bar)	Pressure increase (bar/turn)
CB000024	CBSN-060-DSRH-03-161-N350	3:1	350	140 - 350	197
CB000034	CBSN-060-DSRH-03-161-N200	3:1	200	70 - 210	147
CB000072	CBSN-060-DSRH-08-161-N350	8:1	350	140 - 350	93
CB000073	CBSN-060-DSRH-08-161-N200	8:1	200	70 - 210	55

OVERCENTRE VALVE

CBSN-060-DCNH

DIFFERENTIAL AREA

ATLANTIC Fluid Tech

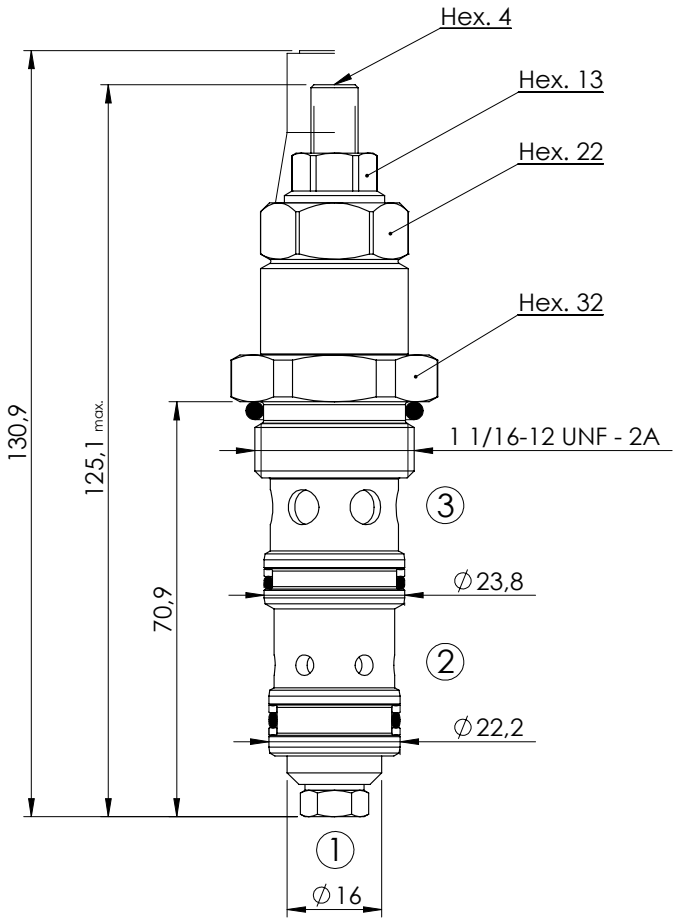

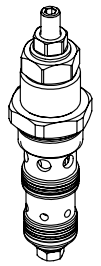

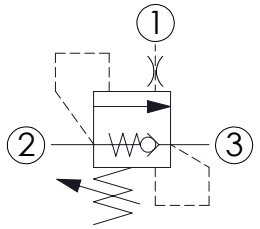

SPECIFICATIONS

Max. operating pressure:	350 bar
Rated flow:	60 l/min
Cavity:	VP000121
Weight:	0,31 kg

SEALING CAP

Ordering code:

AT000020

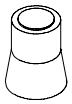

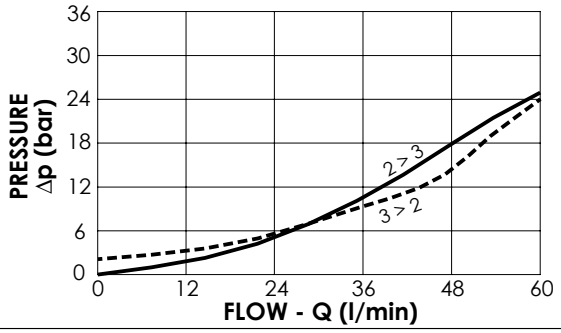

NOTES

Setting: at least 1.3 times the load induced pressure

Installation torque:

ORDERING CODES

Quick code	Description	Pilot ratio	Standard setting (bar, Q=5 l/min)	Adjust. range (bar)	Pressure increase (bar/turn)
CB000002	CBSN-060-DCNH-04-121-N350	4,2:1	350	100-350	139
CB000003	CBSN-060-DCNH-04-121-N200	4,2:1	200	60-210	62

OVERCENTRE VALVE

CBSN-100-DCNH

DIFFERENTIAL AREA

ATLANTIC Fluid Tech

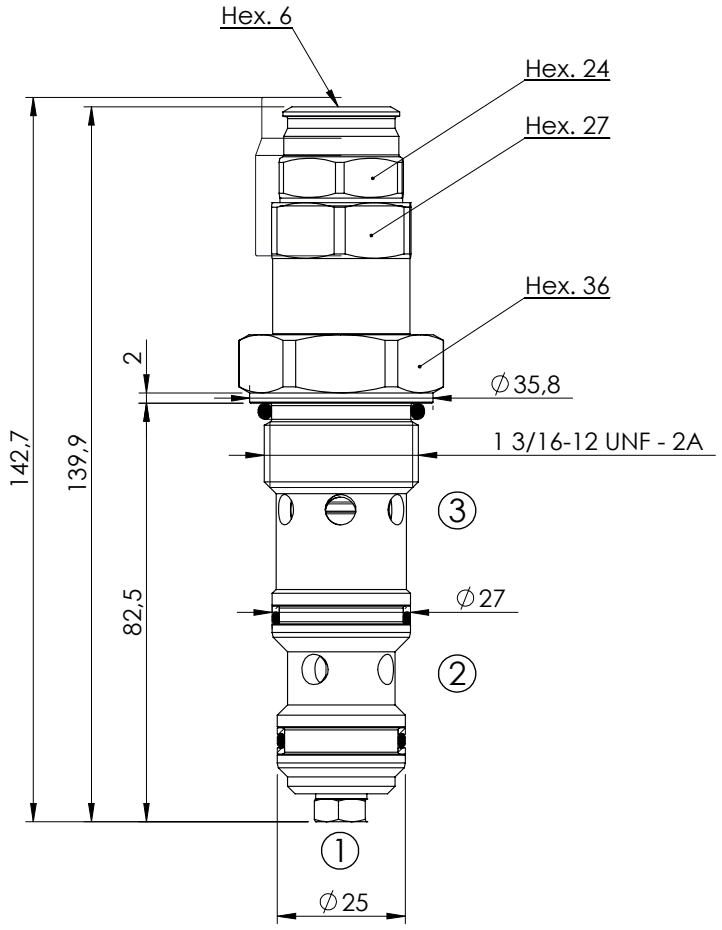

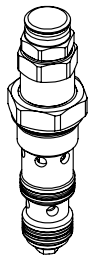

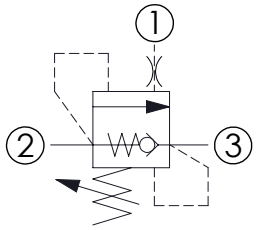

SPECIFICATIONS

Max. operating pressure:	350 bar
Rated flow:	100 l/min
Cavity:	VP000120
Weight:	0,52 kg

SEALING CAP

Ordering code:

PT000243

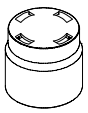

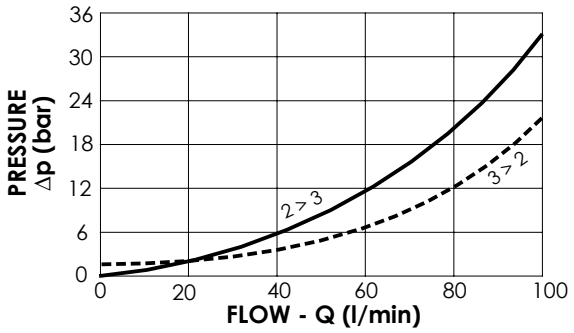

NOTES

Setting: at least 1.3 times the load induced pressure

Installation torque:

ORDERING CODES

Quick code	Description	Pilot ratio	Standard setting (bar, Q=5 l/min)	Adjust. range (bar)	Pressure increase (bar/turn)
CB000015	CBSN-100-DCNH-04-120-N350	3,8:1	350	100-350	118
CB000113	CBSN-100-DCNH-04-120-N200	3,8:1	200	60-210	68
CB000094	CBSN-100-DCNH-08-120-N350	8:1	350	100-350	132
CB000114	CBSN-100-DCNH-08-120-N200	8:1	200	60-210	58

OVERCENTRE VALVE

CBSN-120-DSRH

POPPET TYPE DIFFERENTIAL AREA

ATLANTIC Fluid Tech

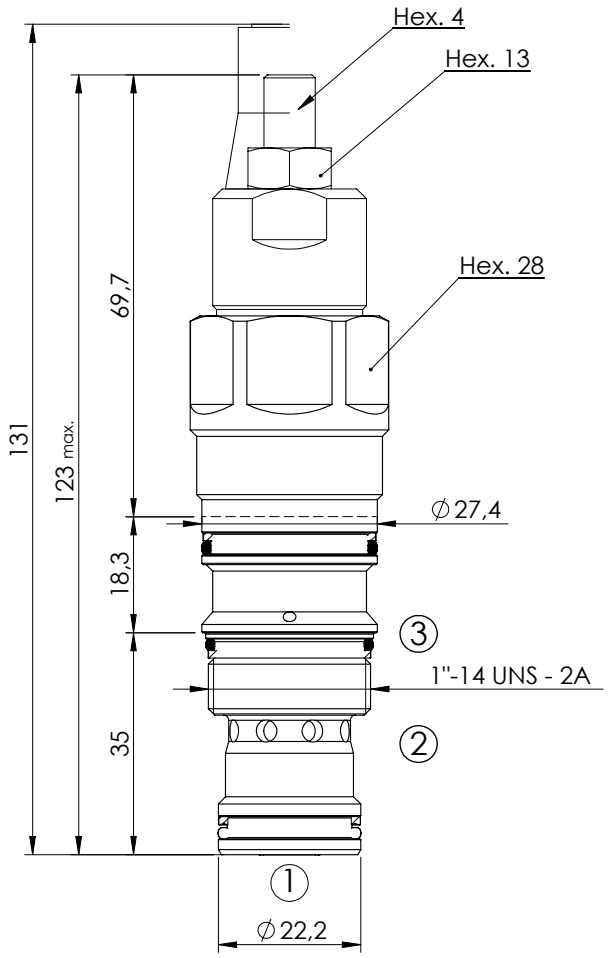

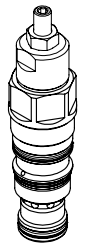

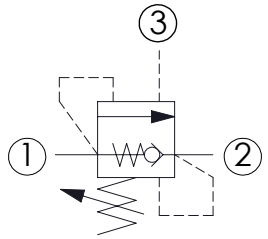

SPECIFICATIONS

Max. operating pressure:	350 bar
Rated flow:	120 l/min
Cavity:	VP000165 (SUN T-2A)
Weight:	0,36 kg

SEALING CAP

Ordering code:

AT000020

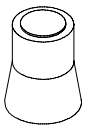

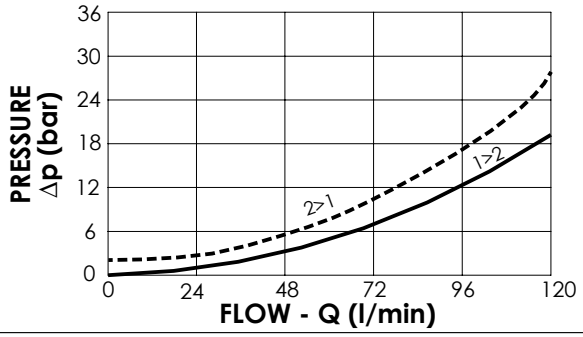

NOTES

Setting: at least 1.3 times the load induced pressure

Installation torque:

ORDERING CODES

Quick code	Description	Pilot ratio	Standard setting (bar, Q=5 l/min)	Adjust. range (bar)	Pressure increase (bar/turn)
CB000029	CBSN-120-DSRH-04-165-N350	4:1	350	140 - 350	174
CB000035	CBSN-120-DSRH-04-165-N200	4:1	200	70 - 210	58
CB000085	CBSN-120-DSRH-08-165-N350	8:1	350	140 - 350	72
CB000093	CBSN-120-DSRH-08-165-N200	8:1	200	70 - 210	44

OVERCENTRE VALVE

CBSN-120-DAGH

DIFFERENTIAL AREA POPPET TYPE

ATLANTIC Fluid Tech

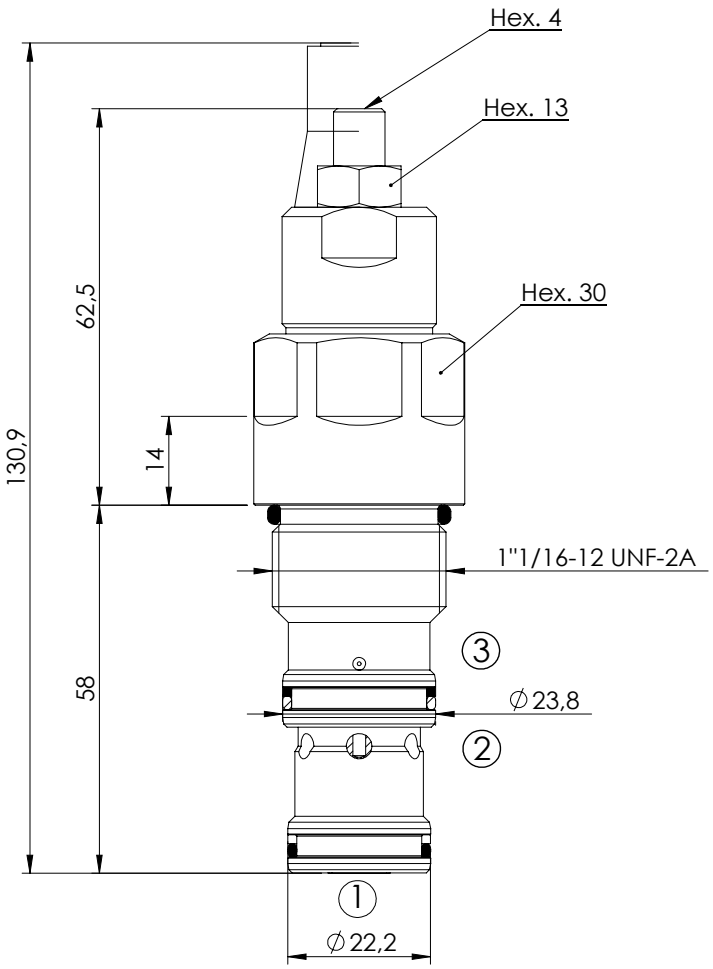

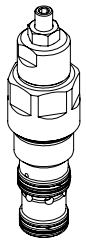

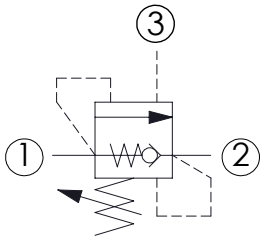

SPECIFICATIONS

Max. operating pressure:	350 bar
Rated flow:	120 l/min
Cavity:	SAE-12-3C
Weight:	0,38 kg

SEALING CAP

Ordering code:

AT000020

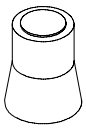

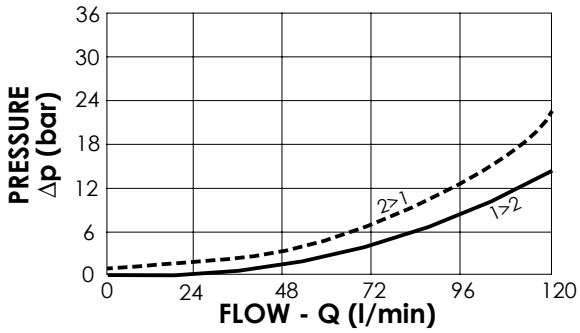

NOTES

Setting: at least 1.3 times the load induced pressure

Installation torque:	80 - 95 Nm
Seal kit:	RA700088

Turn clockwise to increase the setting

ORDERING CODES

Quick code	Description	Pilot ratio	Standard setting (bar, Q=5 l/min)	Adjust. range (bar)	Pressure increase (bar/turn)
CB000045	CBSN-120-DARH-04-S12-N350	4:1	350	140 - 350	174
		4:1	200	70 - 210	58
		8:1	350	140 - 350	72
		8:1	200	70 - 210	44

OVERCENTRE VALVE

CBSN-150-DCNH

DIFFERENTIAL AREA

ATLANTIC Fluid Tech

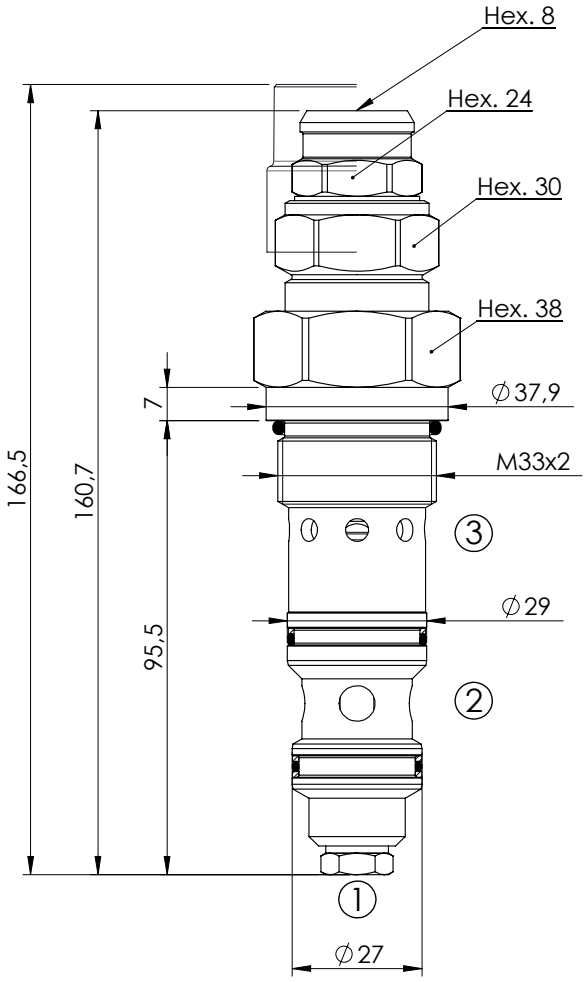

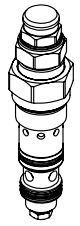

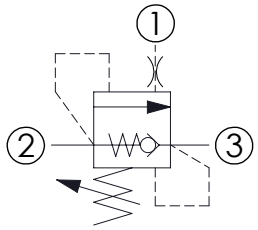

SPECIFICATIONS

Max. operating pressure:	350 bar
Rated flow:	150 l/min
Cavity:	VP000128
Weight:	0,7 kg

SEALING CAP

Ordering code:
ST000012

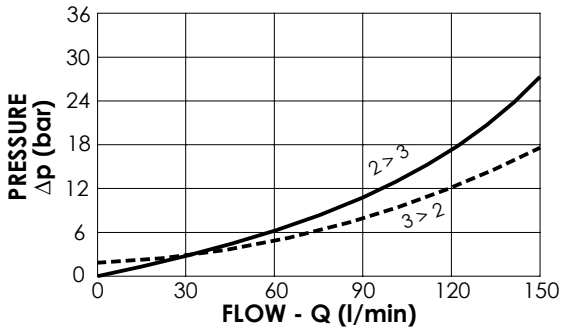

NOTES

Setting: at least 1.3 times the load induced pressure

Installation torque:

ORDERING CODES

Quick code	Description	Pilot ratio	Standard setting (bar, Q=5 l/min)	Adjust. range (bar)	Pressure increase (bar/turn)
CB000004	CBSN-150-DCNH-04-128-N350	4:1	350	100-350	103
CB000043	CBSN-150-DCNH-08-128-N350	8:1	350	100-350	82

OVERCENTRE VALVE

CBSN-240-DSGH

POPPET TYPE DIFFERENTIAL AREA

ATLANTIC Fluid Tech

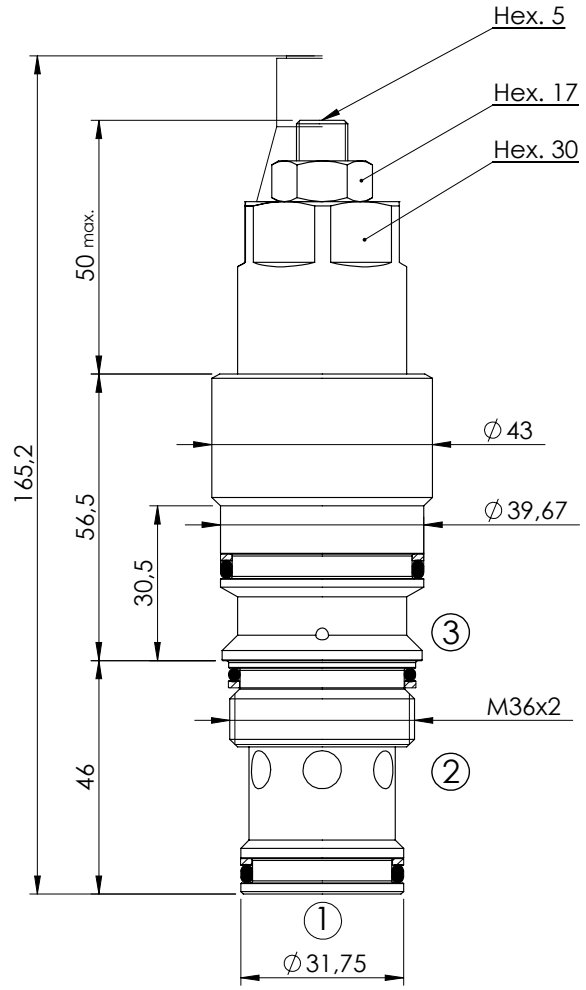

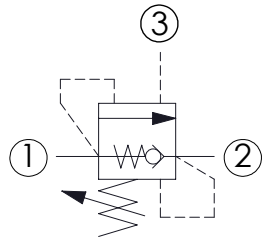

SPECIFICATIONS

Max. operating pressure:	350 bar
Rated flow:	240 l/min
Cavity:	VP000166 (SUN T-17A)
Weight:	0,73 kg

SEALING CAP

Ordering code:

AT000022

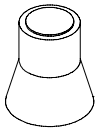

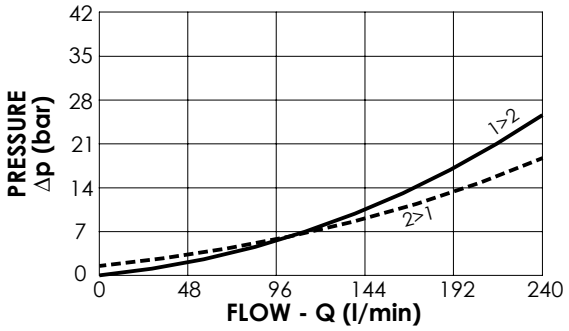

NOTES

Setting: at least 1.3 times the load induced pressure

Installation torque:

ORDERING CODES

Quick code	Description	Pilot ratio	Standard setting (bar, Q=5 l/min)	Adjust. range (bar)	Pressure increase (bar/turn)
CB000028	CBSN-240-DSGH-04-166-N350	4:1	350	140-350	114

OVERCENTRE VALVE

CBSN-300-DCNH

DIFFERENTIAL AREA

ATLANTIC Fluid Tech

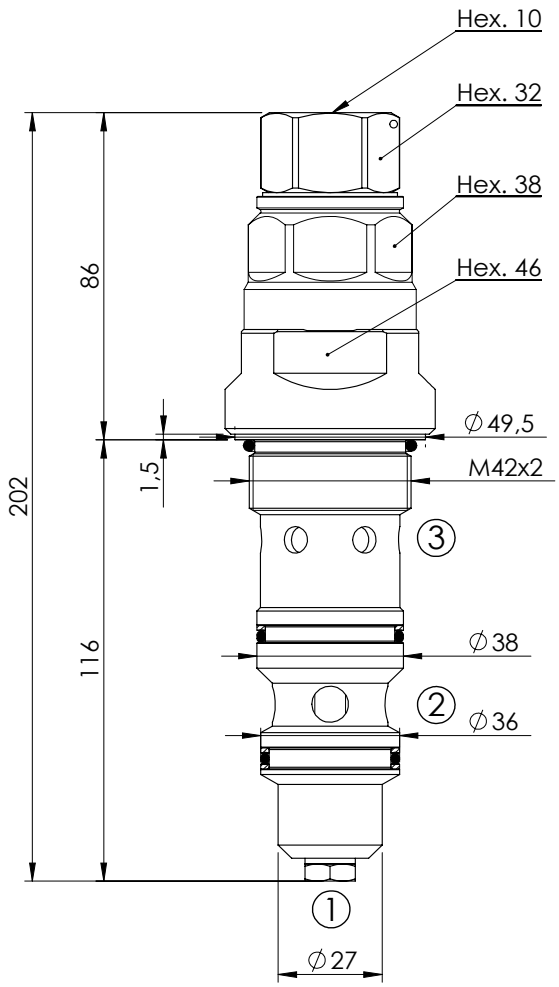

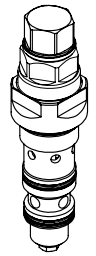

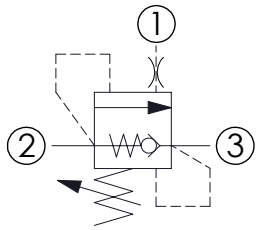

SPECIFICATIONS

Max. operating pressure:	350 bar
Rated flow:	300 l/min
Cavity:	VP000127
Weight:	1,5 kg

SEALING CAP

Ordering code:

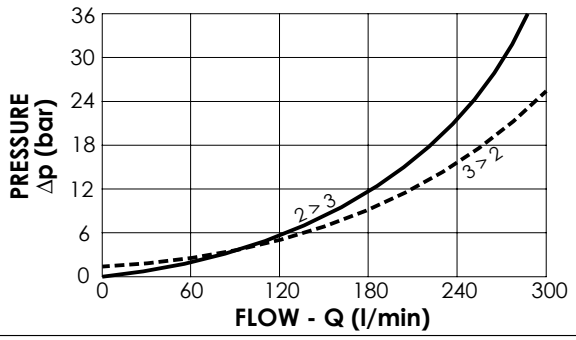

NOTES

Setting: at least 1.3 times the load induced pressure

Installation torque:

ORDERING CODES

Quick code	Description	Pilot ratio	Standard setting (bar, Q=5 l/min)	Adjust. range (bar)	Pressure increase (bar/turn)
CB000005	CBSN-300-DCNH-04-127-N350	4:1	350	100-350	75

OVERCENTRE VALVE

CBSN-320-DARH

DIFFERENTIAL AREA POPPET TYPE

ATLANTIC Fluid Tech

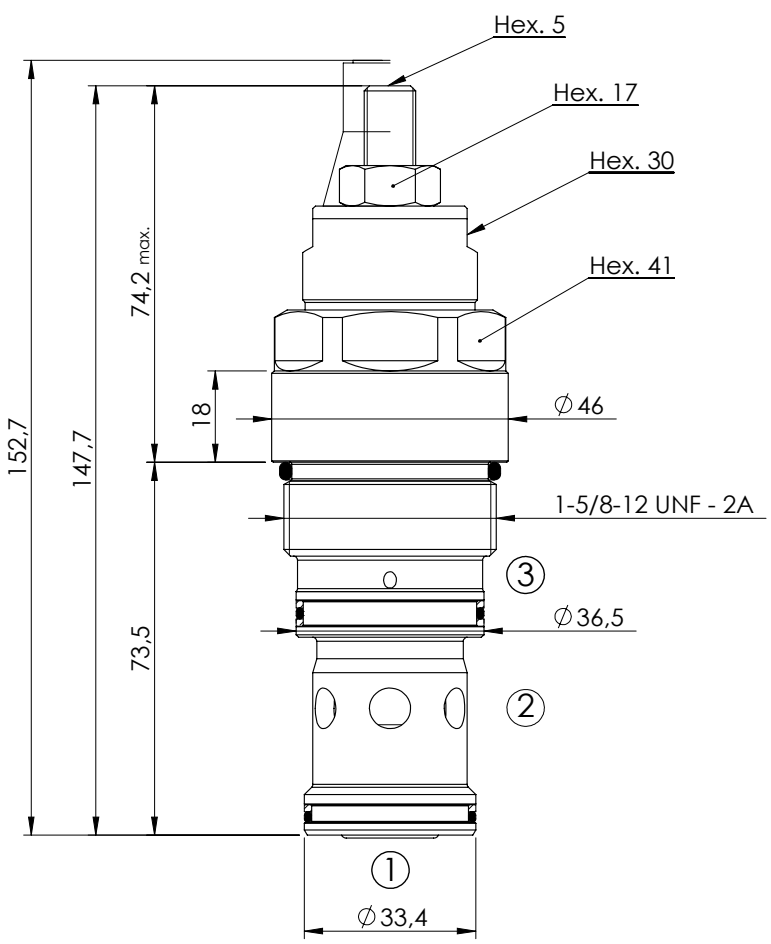

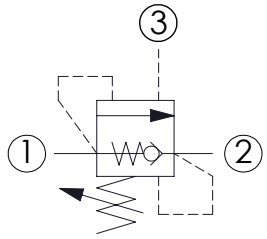

SPECIFICATIONS

Max. operating pressure:	350 bar
Rated flow:	320 l/min
Cavity:	SAE-20-3C
Weight:	0,87 kg

SEALING CAP

Ordering code:
AT000021

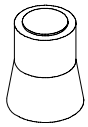

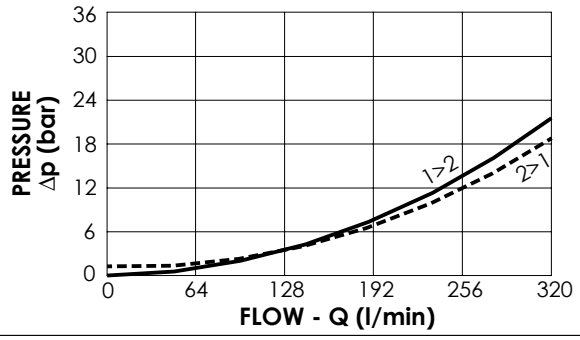

NOTES

Setting: at least 1.3 times the load induced pressure

Installation torque:

ORDERING CODES

Quick code	Description	Pilot ratio	Standard setting (bar, Q=5 l/min)	Adjust. range (bar)	Pressure increase (bar/turn)
CB000025	CBSN-320-DARH-04-S20-N350	4:1	350	140 - 350	120
CB000026	CBSN-320-DARH-04-S20-N200	4:1	200	70-210	47
CB000027	CBSN-320-DARH-08-S20-N350	8:1	350	140 - 350	87

OVERCENTRE VALVE

CBST-030-PARH

POPPET TYPE
FULLY COMPENSATED

ATLANTIC Fluid Tech

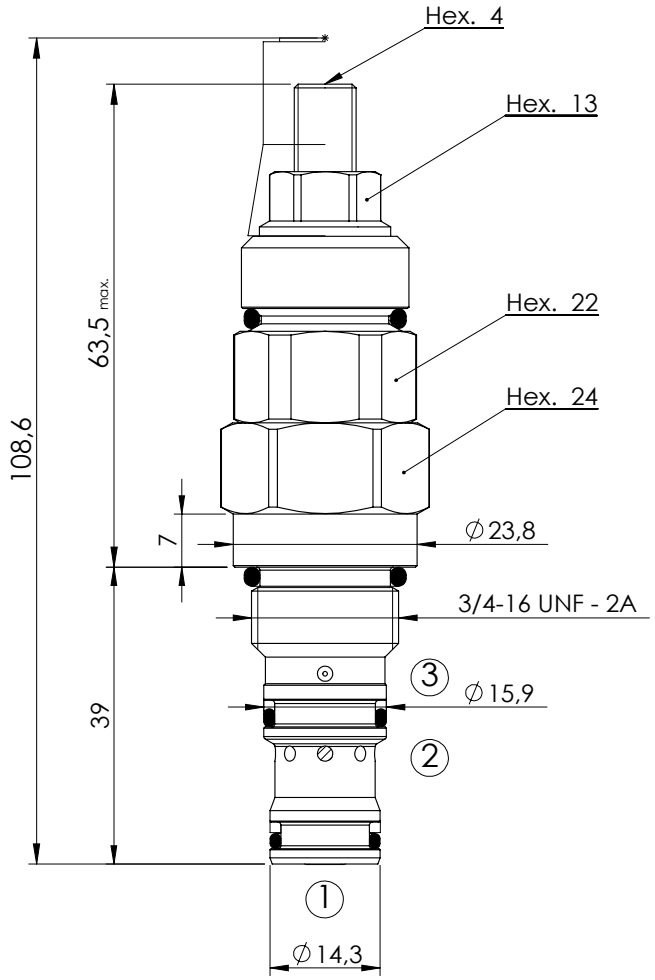

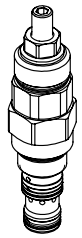

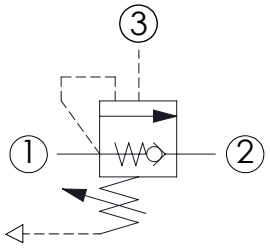

SPECIFICATIONS

Max. operating pressure:	350 bar
Rated flow:	30 l/min
Cavity:	SAE-08-3C
Weight:	0,19 kg

SEALING CAP

Ordering code:
AT000020

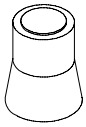

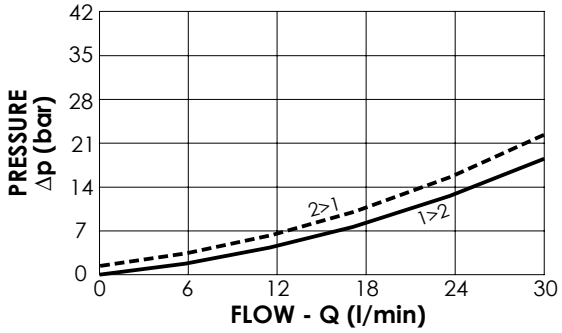

NOTES

Setting: at least 1.3 times the load induced pressure

Installation torque:

ORDERING CODES

Quick code	Description	Pilot ratio	Standard setting (bar, Q=5 l/min)	Adjust. range (bar)	Pressure increase (bar/turn)
CB000011	CBST-030-PARH-04-S08-N350	4:1	350	170 - 350	134
CB000070	CBST-030-PARH-04-S08-N200	4:1	200	70-210	95

OVERCENTRE VALVE

CBST-040-DCNH

FULLY COMPENSATED

ATLANTIC Fluid Tech

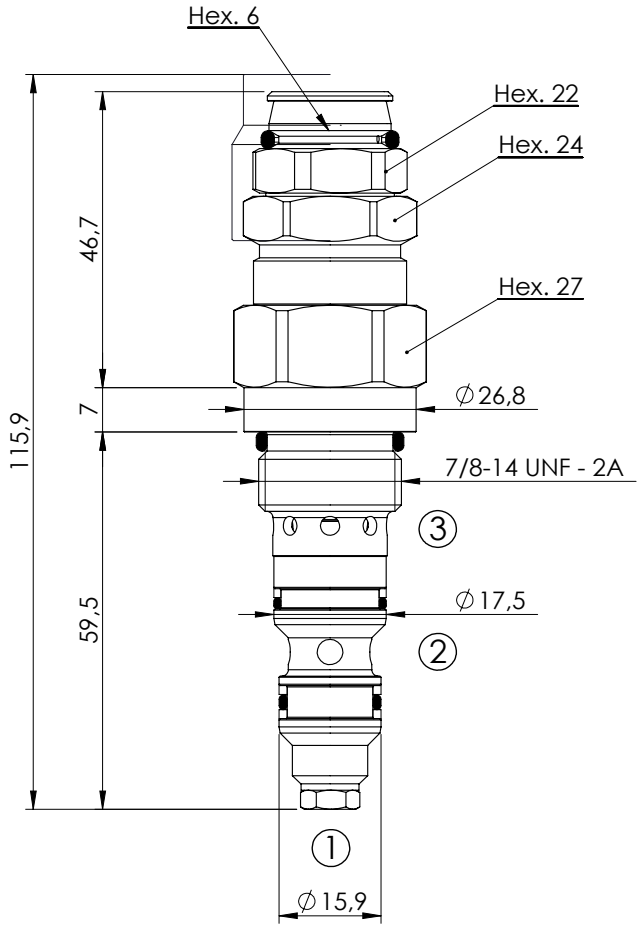

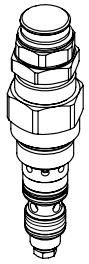

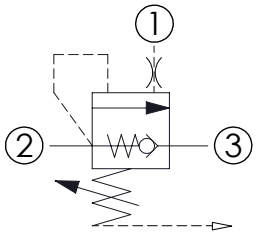

SPECIFICATIONS

Max. operating pressure:	350 bar
Rated flow:	40 l/min
Cavity:	VP000174
Weight:	0,26 kg

SEALING CAP

Ordering code:
PT000258

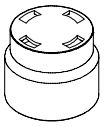

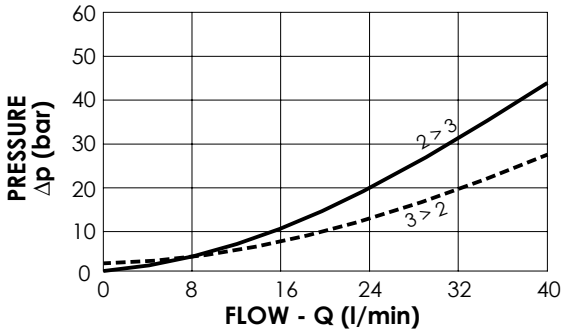

NOTES

Setting: at least 1.3 times the load induced pressure

Installation torque:

ORDERING CODES

Quick code	Description	Pilot ratio	Standard setting (bar, Q=5 l/min)	Adjust. range (bar)	Pressure increase (bar/turn)
CB000008	CBST-040-DCNH-04-174-N350	4,1:1	350	100-350	144
CB000051	CBST-040-DCNH-04-174-N200	4,1:1	200	60-210	66

OVERCENTRE VALVE

CBST-100-DCNH

FULLY COMPENSATED

ATLANTIC Fluid Tech

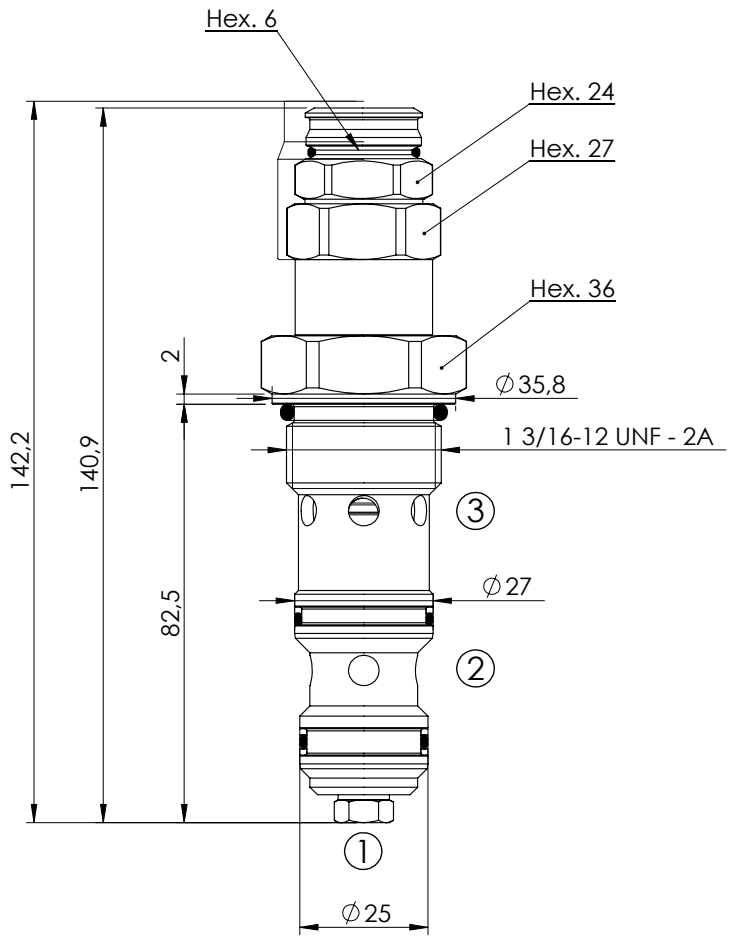

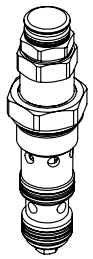

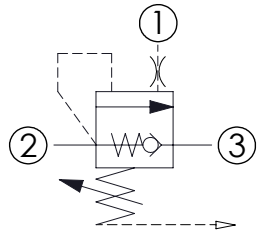

SPECIFICATIONS

Max. operating pressure:	350 bar
Rated flow:	100 l/min
Cavity:	VP000120
Weight:	0,51 kg

SEALING CAP

Ordering code:

PT000243

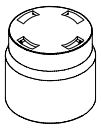

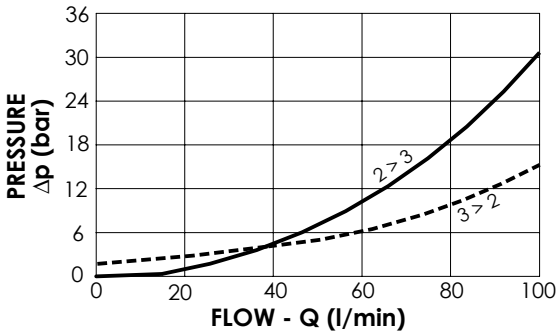

NOTES

Setting: at least 1.3 times the load induced pressure

Installation torque:

ORDERING CODES

Quick code	Description	Pilot ratio	Standard setting (bar, Q=5 l/min)	Adjust. range (bar)	Pressure increase (bar/turn)
CB000001	CBST-100-DCNH-04-120-N350	3,8:1	350	100-350	118
CB000102	CBST-100-DCNH-08-120-N350	8:1	350	100-350	205

OVERCENTRE VALVE

CBST-150-DCNH

FULLY COMPENSATED

ATLANTIC Fluid Tech

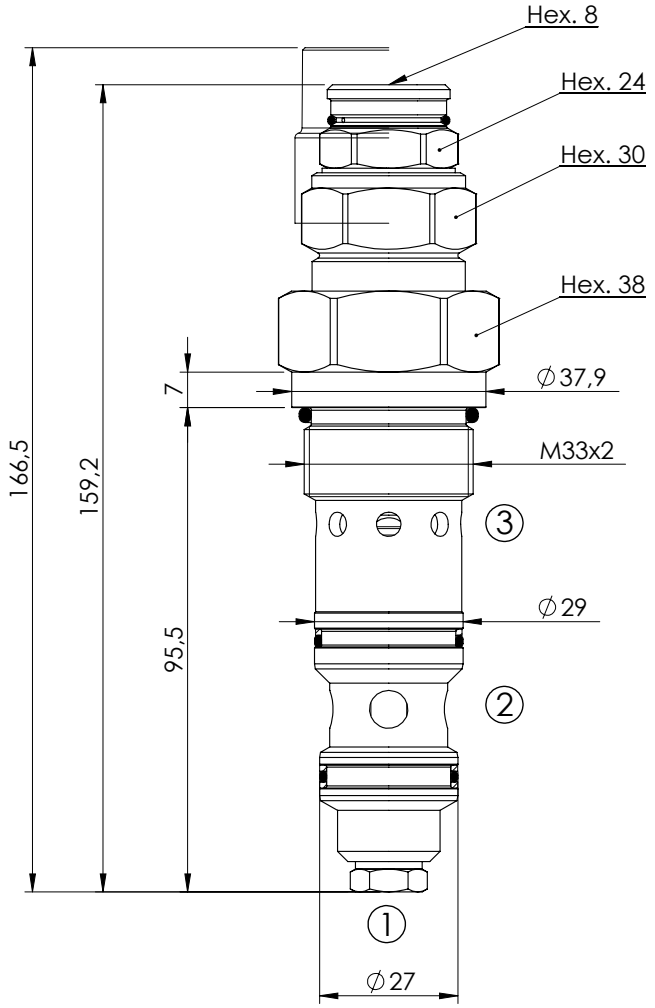

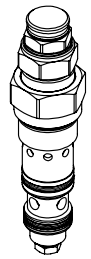

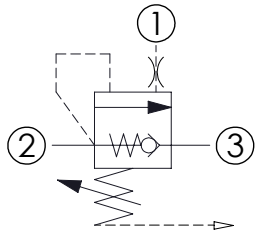

SPECIFICATIONS

Max. operating pressure:	350 bar
Rated flow:	150 l/min
Cavity:	VP000128
Weight:	0,7 kg

SEALING CAP

Ordering code:

ST000012

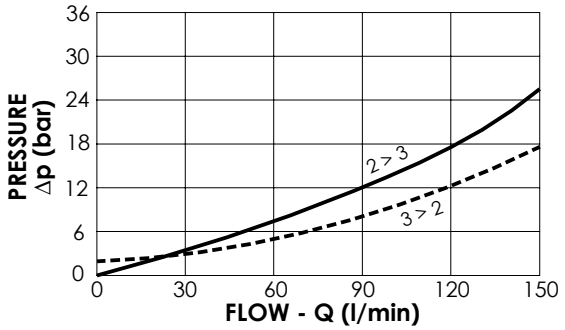

NOTES

Setting: at least 1.3 times the load induced pressure

Installation torque:

ORDERING CODES

Quick code	Description	Pilot ratio	Standard setting (bar, Q=5 l/min)	Adjust. range (bar)	Pressure increase (bar/turn)
CB000014	CBST-150-DCNH-04-128-N350	4:1	350	100-350	103
CB000022	CBST-150-DCNH-08-128-N350	8:1	350	100-350	100

OVERCENTRE VALVE

CBST-300-DCNH

FULLY COMPENSATED

ATLANTIC Fluid Tech

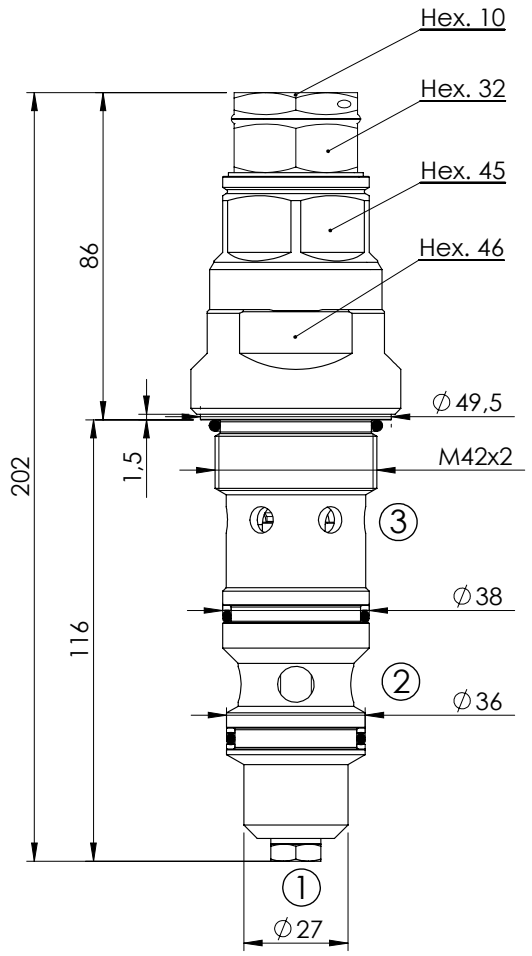

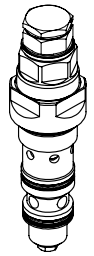

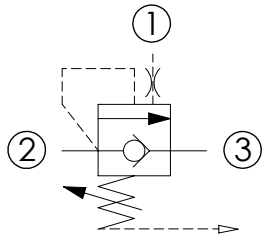

SPECIFICATIONS

Max. operating pressure:	350 bar
Rated flow:	300 l/min
Cavity:	VP000127
Weight:	1,49 kg

SEALING CAP

Ordering code:

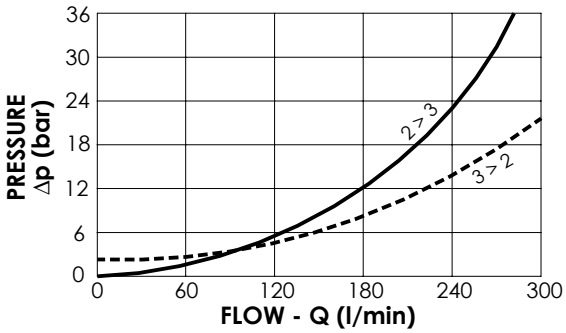

NOTES

Setting: at least 1.3 times the load induced pressure

Installation torque: 246 - 272 Nm

ORDERING CODES

Quick code	Description	Pilot ratio	Standard setting (bar, Q=5 l/min)	Adjust. range (bar)	Pressure increase (bar/turn)
CB000017	CBST-300-DCNH-06-127-N350	6:1	350	100-350	62
CB000013	CBST-300-DCNH-04-127-N350	4:1	350	100-350	75

OVERCENTRE VALVE

MBSN-040-ALNP

SINGLE ACTING

ATLANTIC Fluid Tech

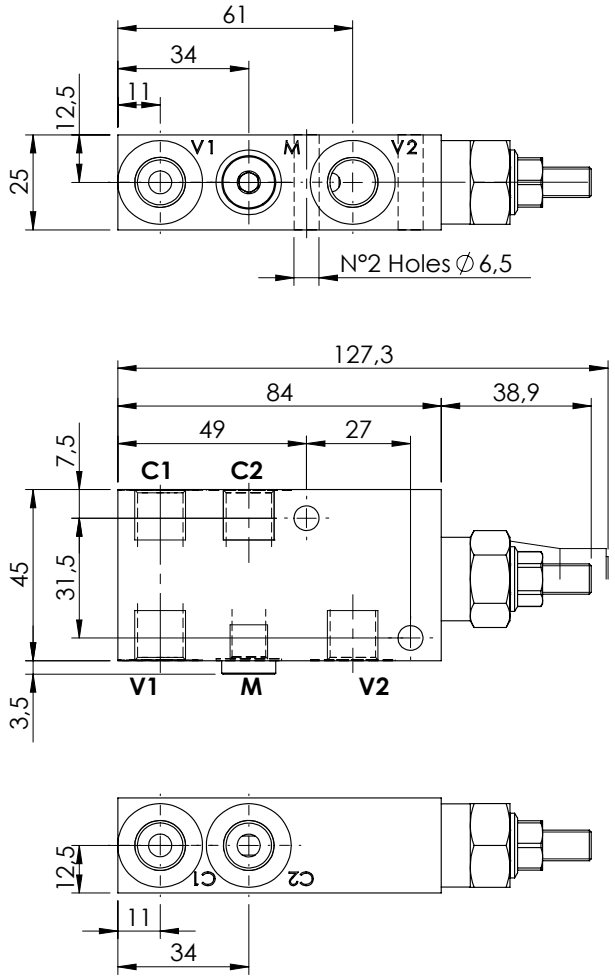

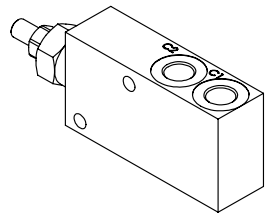

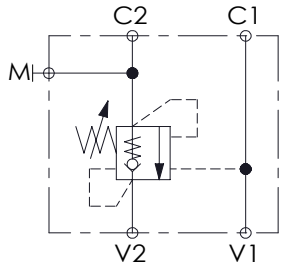

SPECIFICATIONS

Max. operating pressure:	**350 bar**
Rated flow:	**40 l/min**
Manifold:	**Steel**
Weight:	**0,71 kg**

SEALING CAP

Ordering code:

AT000020

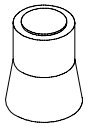

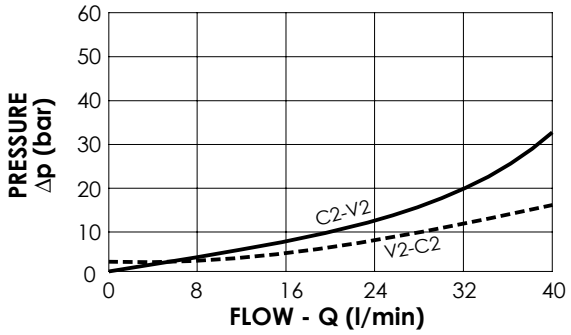

NOTES

Setting: at least 1.3 times the load induced pressure

ORDERING CODES

Quick code	Description	Pilot ratio	Main ports size	Standard setting (bar, Q=5 l/min)	Adjust. range (bar)	Pressure increase (bar/turn)
MB000074	**MBSN-040-ALNP-04-G14-N350**	**4,1:1**	V1,V2: **G1/4"** M: **G1/8"** C1,C2: **G1/4"**	**350**	**100-350**	**184**
MB000604	**MBSN-040-ALNP-04-G14-N200**	**4,1:1**	V1,V2: **G1/4"** M: **G1/8"** C1,C2: **G1/4"**	**200**	**60-210**	**83**

OVERCENTRE VALVE

MBSN-040-ZLNA

SINGLE ACTING IN LINE PORTS

ATLANTIC Fluid Tech

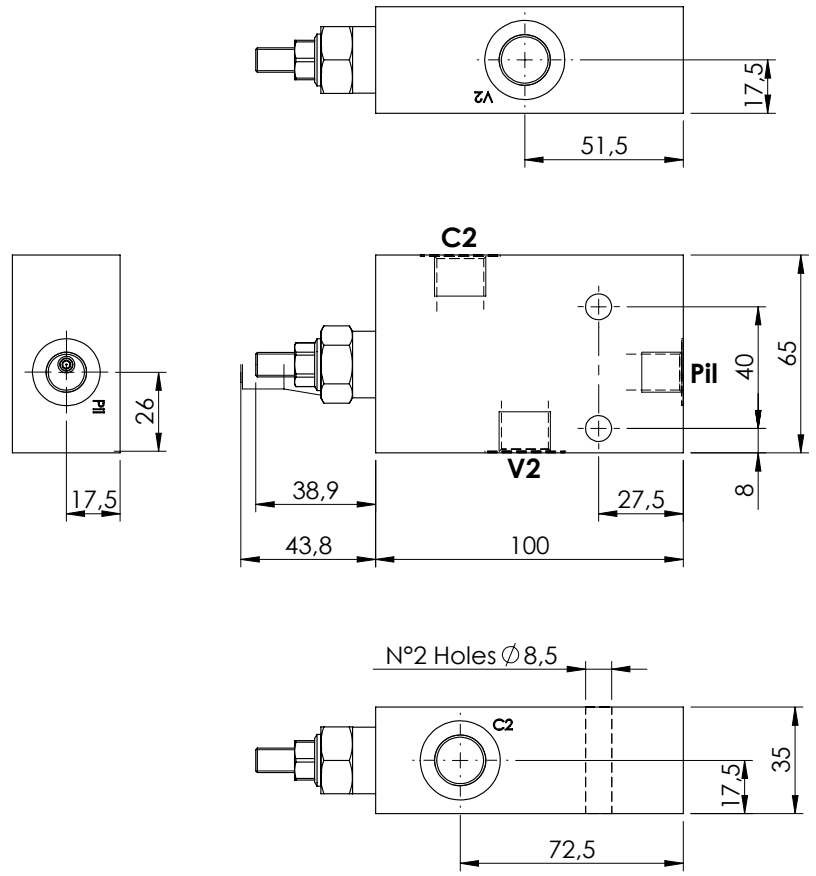

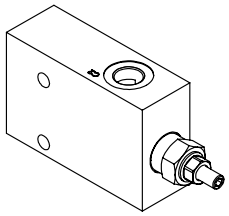

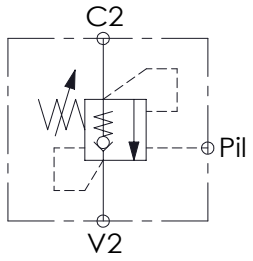

SPECIFICATIONS

Max. operating pressure:	**350 bar**
Rated flow:	**40 l/min**
Manifold:	**Aluminium**
Weight:	**0,64 kg**

SEALING CAP

Ordering code:
AT000020

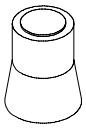

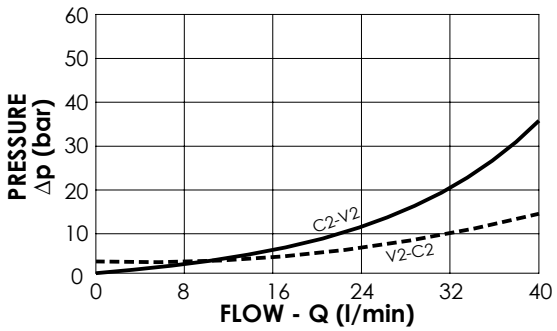

NOTES

Setting: at least 1.3 times the load induced pressure

ORDERING CODES

Quick code	Description	Pilot ratio	Main ports size	Standard setting (bar, Q=5 l/min)	Adjust. range (bar)	Pressure increase (bar/turn)
MB000564	**MBSN-040-ZLNA-04-G38-N350**	**4,1:1**	C2,V2: **G 3/8"** Pil: **G 1/4"**	**350**	**100-350**	**184**
MB000565	**MBSN-040-ZLNA-04-G38-N200**	**4,1:1**	C2,V2: **G 3/8"** Pil: **G 1/4"**	**200**	**60-210**	**83**
MB000566	**MBSN-040-ZLNA-07-G38-N350**	**7,5:1**	C2,V2: **G 3/8"** Pil: **G 1/4"**	**350**	**100-350**	**138**
MB000567	**MBSN-040-ZLNA-07-G38-N200**	**7,5:1**	C2,V2: **G 3/8"** Pil: **G 1/4"**	**200**	**60-210**	**83**

OVERCENTRE VALVE

MBSN-040-AANP

SINGLE ACTING ONE FLANGED PORT

ATLANTIC Fluid Tech

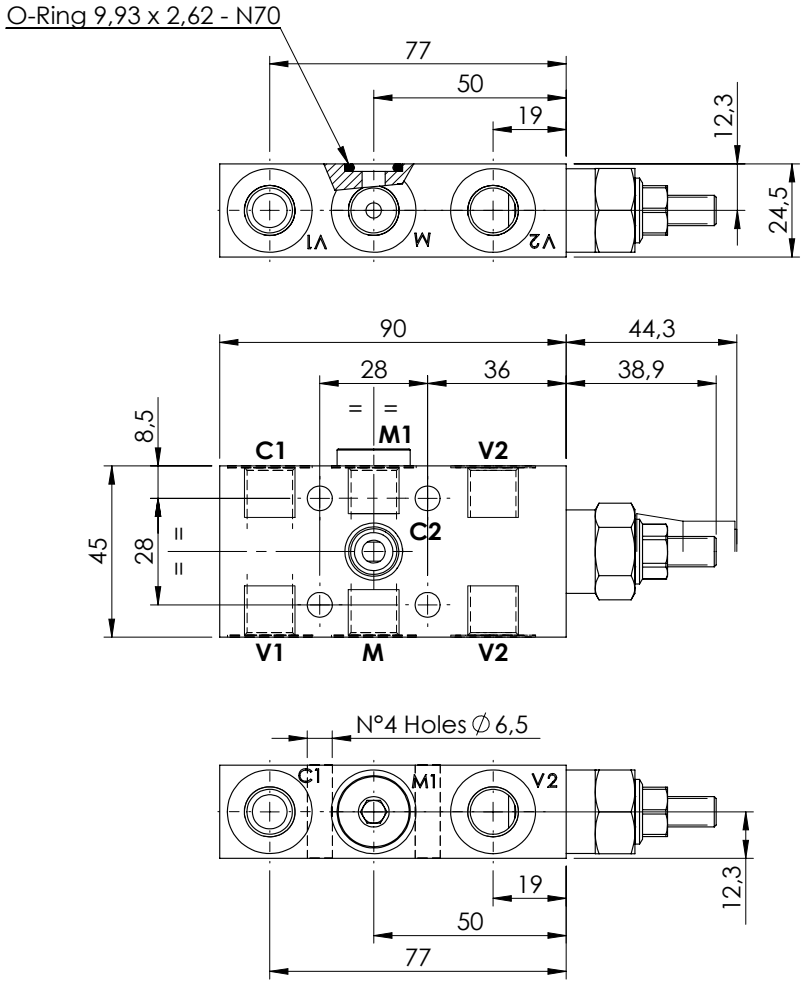

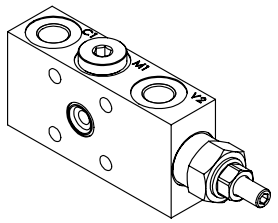

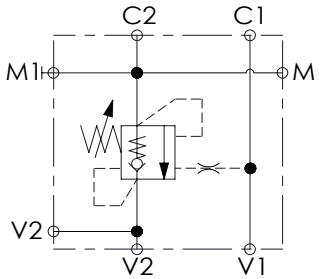

SPECIFICATIONS

Max. operating pressure:	**350 bar**
Rated flow:	**40 l/min**
Manifold:	**Steel**
Weight:	**0,71 kg**

SEALING CAP

Ordering code:

AT000020

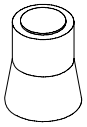

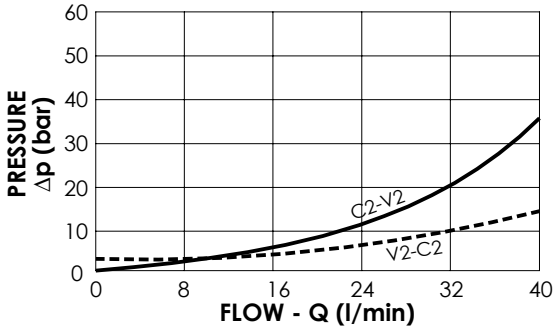

NOTES

Setting: at least 1.3 times the load induced pressure

ORDERING CODES

Quick code	Description	Pilot ratio	Main ports size	Standard setting (bar, Q=5 l/min)	Adjust. range (bar)	Pressure increase (bar/turn)
MB000105	**MBSN-040-AANP-04-G14-N350**	**4,1:1**	V1, V2, M, M1: **G1/4"** C1: **G1/4"** C2: **Ø6**	**350**	**100-350**	**184**

OVERCENTRE VALVE

MBSN-040-ZDNA

SINGLE ACTING ALL FLANGED PORTS

ATLANTIC Fluid Tech

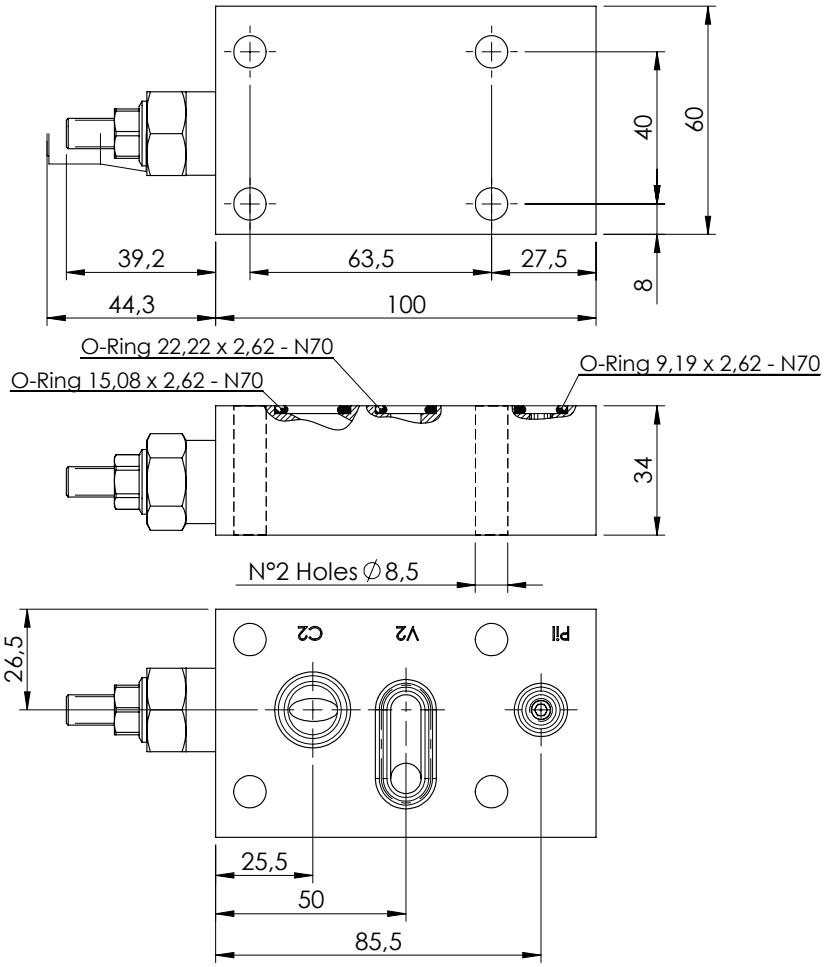

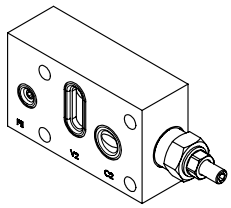

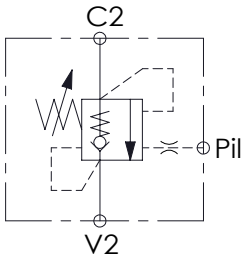

SPECIFICATIONS

Max. operating pressure:	350 bar
Rated flow:	40 l/min
Weight:	0.9 kg

SEALING CAP

Ordering code:

AT000020

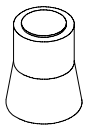

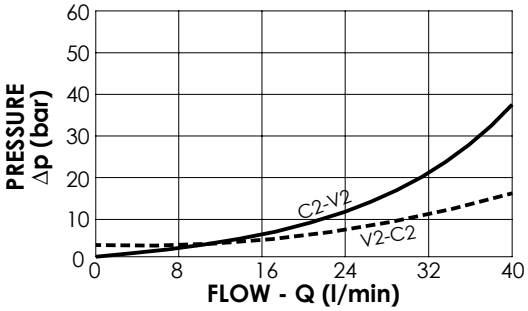

NOTES

Setting: at least 1.3 times the load induced pressure

ORDERING CODES

Quick code	Description	Pilot ratio	Manifold material	Main ports size	Standard setting (bar, Q=5 l/min)	Adjust. range (bar)	Pressure increase (bar/turn)
MB000525	MBSN-040-ZDNA-04-PTF-N350	4,1:1	Aluminium	C2,V2: ∅8 Pil: ∅5	350	100-350	184
MB000526	MBSN-040-ZDNA-04-PTF-N200	4,1:1	Aluminium	C2,V2: ∅8 Pil: ∅5	200	60-210	83

OVERCENTRE VALVE

MBSN-040-APNR

SINGLE ACTING BANJO MOUNTING

ATLANTIC Fluid Tech

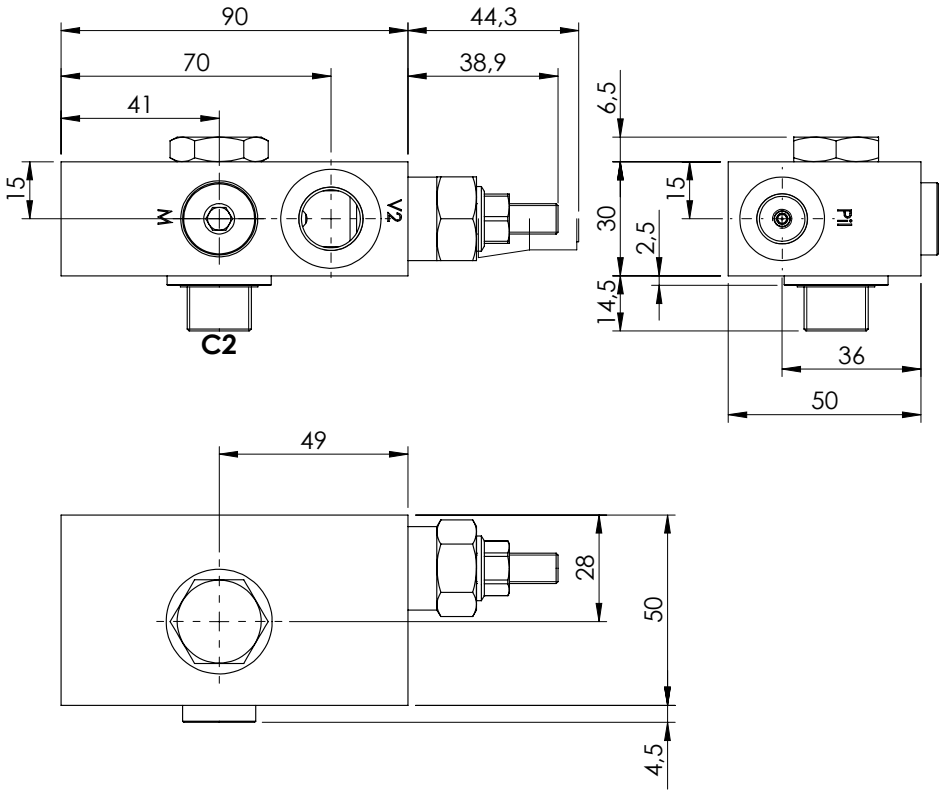

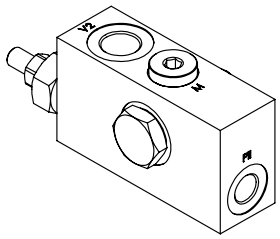

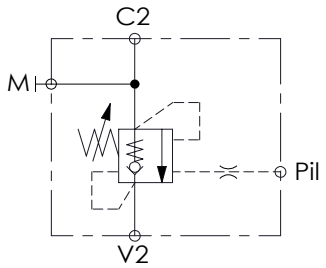

SPECIFICATIONS

Max. operating pressure:	350 bar
Rated flow:	40 l/min
Manifold:	Steel
Weight:	1,07 kg

SEALING CAP

Ordering code:

AT000020

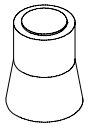

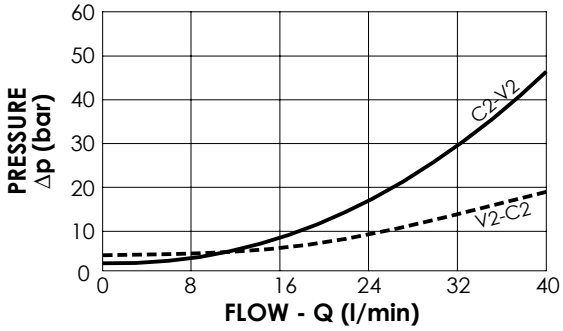

NOTES

Setting: at least 1.3 times the load induced pressure

ORDERING CODES

Quick code	Description	Pilot ratio	Main ports size	Standard setting (bar, Q=5 l/min)	Adjust. range (bar)	Pressure increase (bar/turn)
MB000469	**MBSN-040-APNR-04-G38-N350**	**4,1:1**	C2,V2: **G3/8"** M,Pil: **G1/4"**	**350**	**100-350**	**184**
MB000578	**MBSN-040-APNR-04-G38-N200**	**4,1:1**	C2,V2: **G3/8"** M,Pil: **G1/4"**	**200**	**60-210**	**83**
MB000840	**MBSN-040-APNR-07-G38-N350**	**7,5:1**	C2,V2: **G3/8"** M,Pil: **G1/4"**	**350**	**100-350**	**138**

OVERCENTRE VALVE

MBSN-060-ALNR

SINGLE ACTING

ATLANTIC Fluid Tech

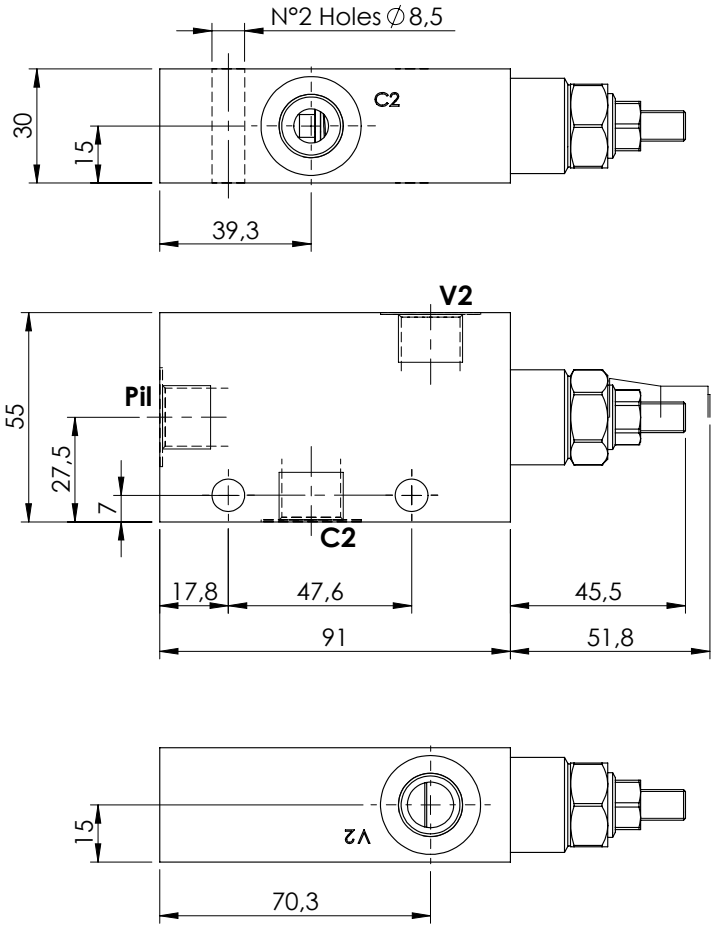

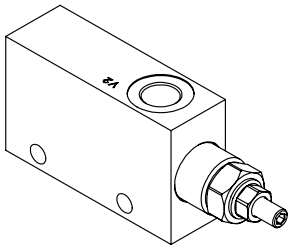

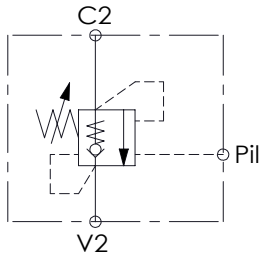

SPECIFICATIONS

Max. operating pressure:	**350 bar**
Rated flow:	**60 l/min**
Manifold:	**Steel**
Weight:	**1,11 kg**

SEALING CAP

Ordering code:

AT000020

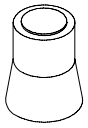

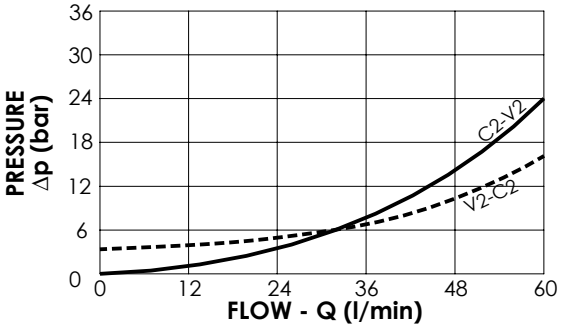

NOTES

Setting: at least 1.3 times the load induced pressure

ORDERING CODES

Quick code	Description	Pilot ratio	Main ports size	Standard setting (bar, Q=5 l/min)	Adjust. range (bar)	Pressure increase (bar/turn)
MB000002	**MBSN-060-ALNR-04-G38-N350**	**4,2:1**	V2, C2, Pil: **G3/8"**	**350**	**100-350**	**138**
MB000054	**MBSN-060-ALNR-04-G38-N200**	**4,2:1**	V2, C2, Pil: **G3/8"**	**200**	**60-210**	**62**

OVERCENTRE VALVE

MBSN-060-ALNE

SINGLE ACTING

ATLANTIC Fluid Tech

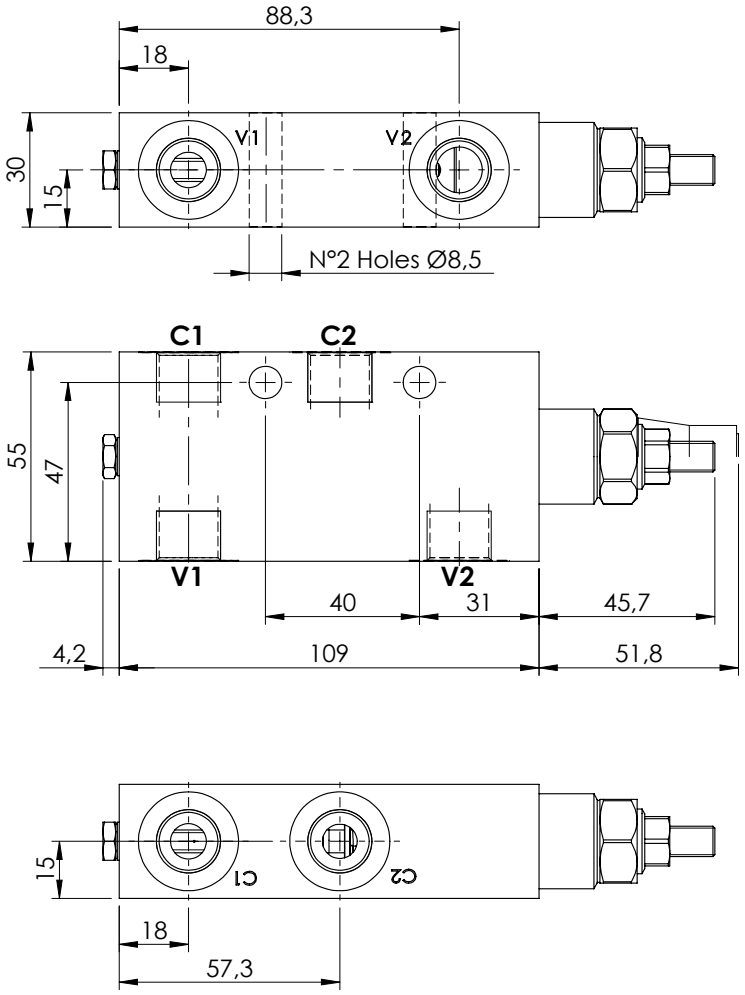

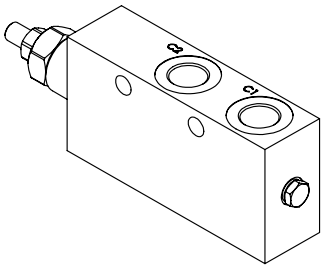

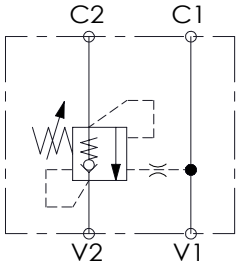

SPECIFICATIONS

Max. operating pressure:	**350 bar**
Rated flow:	**60 l/min**
Manifold:	**Steel**
Weight:	**1,32 kg**

SEALING CAP

Ordering code:

AT000020

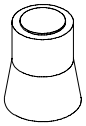

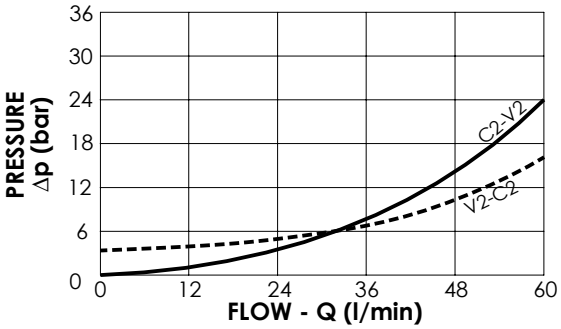

NOTES

Setting: at least 1.3 times the load induced pressure

ORDERING CODES

Quick code	Description	Pilot ratio	Main ports size	Standard setting (bar, Q=5 l/min)	Adjust. range (bar)	Pressure increase (bar/turn)
MB000051	**MBSN-060-ALNE-04-G38-N350**	**4,2:1**	V1, V2: **G3/8"** C1, C2: **G3/8"**	**350**	**100-350**	**138**
MB000179	**MBSN-060-ALNE-04-G38-N200**	**4,2:1**	V1, V2: **G3/8"** C1, C2: **G3/8"**	**200**	**60-250**	**62**
MB000044	**MBSN-060-ALNE-11-G38-N350**	**11:1**	V1, V2: **G3/8"** C1, C2: **G3/8"**	**350**	**150-350**	**160**

OVERCENTRE VALVE

MBSN-060-ZLSE

SINGLE ACTING

ATLANTIC Fluid Tech

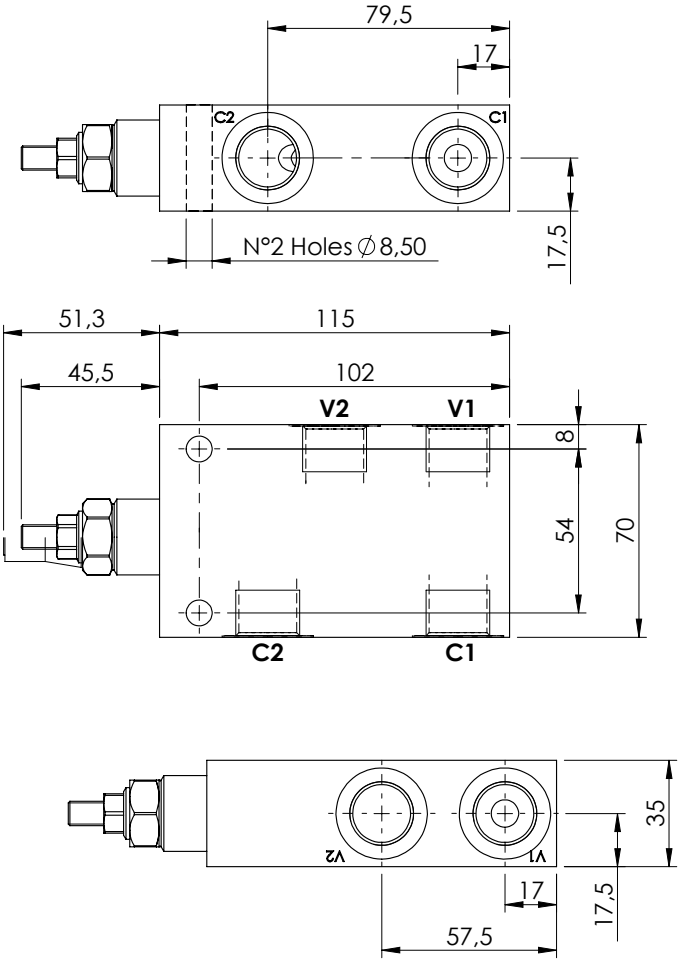

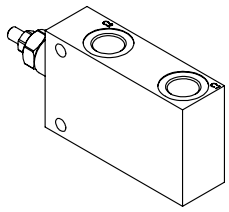

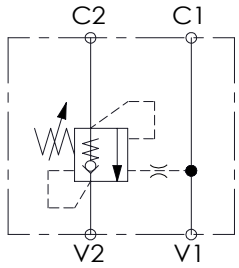

SPECIFICATIONS

Max. operating pressure:	350 bar
Rated flow:	60 l/min
Weight:	Aluminium 0.8 kg; Steel 2.0 kg

SEALING CAP

Ordering code:

AT000020

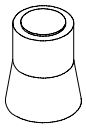

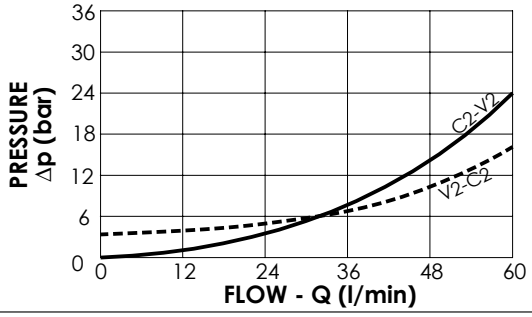

NOTES

Setting: at least 1.3 times the load induced pressure

ORDERING CODES

Quick code	Description	Pilot ratio	Manifold material	Main ports size	Standard setting (bar, Q=5 l/min)	Adjust. range (bar)	Pressure increase (bar/turn)
MB000508	**MBSN-060-ZLSE-04-G12-N350**	**4,2:1**	**Aluminium**	V1, V2: **G1/2"** C1, C2: **G1/2"**	**350**	**100-350**	**138**
MB000509	**MBSN-060-ZLSE-04-G12-N200**	**4,2:1**	**Aluminium**	V1, V2: **G1/2"** C1, C2: **G1/2"**	**200**	**60-210**	**62**
MB000510	**MBSN-060-ALDE-04-G12-N350**	**4,2:1**	**Steel**	V1, V2: **G1/2"** C1, C2: **G1/2"**	**350**	**100-350**	**138**
MB000511	**MBSN-060-ALDE-04-G12-N200**	**4,2:1**	**Steel**	V1, V2: **G1/2"** C1, C2: **G1/2"**	**200**	**60-210**	**62**
MB000512	**MBSN-060-ZLSE-07-G12-N350**	**7:1**	**Aluminium**	V1, V2: **G1/2"** C1, C2: **G1/2"**	**350**	**100-350**	**106**
MB000513	**MBSN-060-ZLSE-07-G12-N200**	**7:1**	**Aluminium**	V1, V2: **G1/2"** C1, C2: **G1/2"**	**200**	**60-210**	**46**
MB000514	**MBSN-060-ALDE-07-G12-N350**	**7:1**	**Steel**	V1, V2: **G1/2"** C1, C2: **G1/2"**	**350**	**100-350**	**106**
MB000515	**MBSN-060-ALDE-07-G12-N200**	**7:1**	**Steel**	V1, V2: **G1/2"** C1, C2: **G1/2"**	**200**	**60-210**	**46**

OVERCENTRE VALVE

MBSN-060-ALNE

SINGLE ACTING

ATLANTIC Fluid Tech

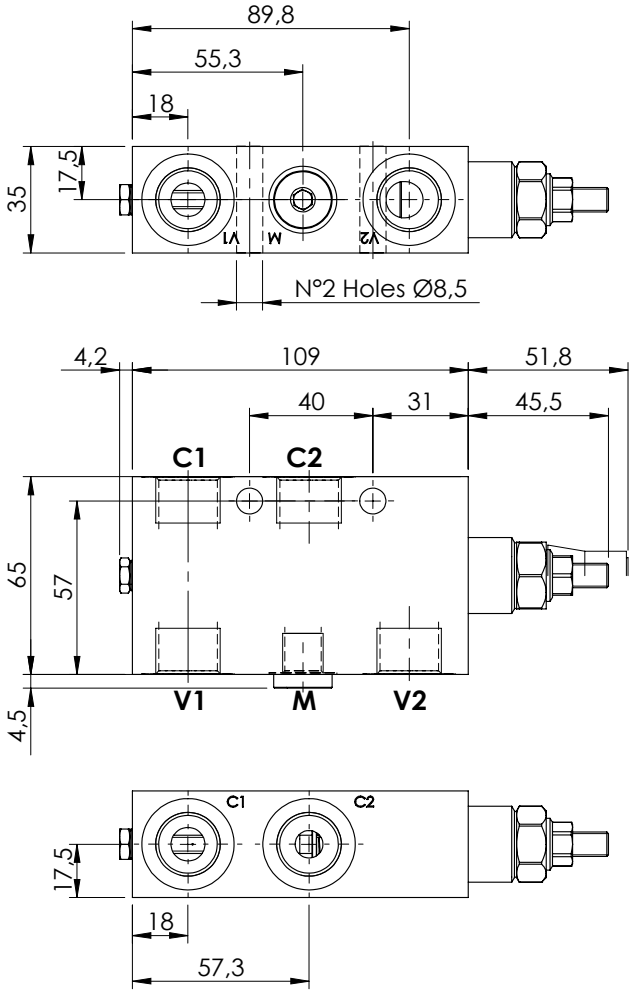

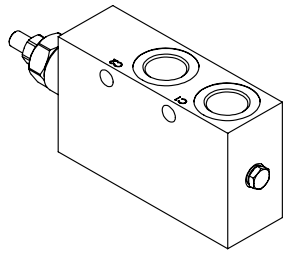

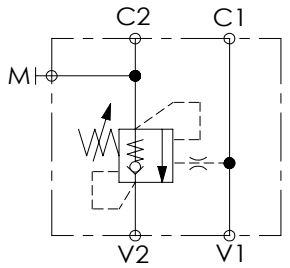

SPECIFICATIONS

Max. operating pressure:	350 bar
Rated flow:	60 l/min
Manifold:	Steel
Weight:	1,77 kg

SEALING CAP

Ordering code:

AT000020

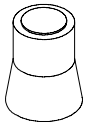

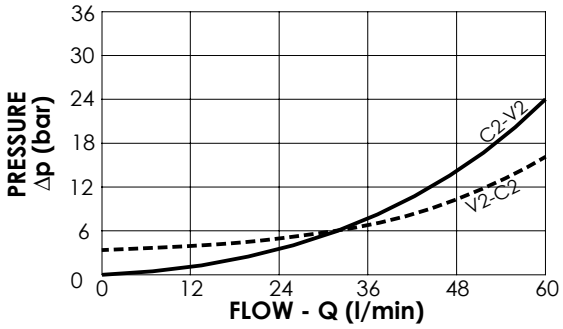

NOTES

Setting: at least 1.3 times the load induced pressure

ORDERING CODES

Quick code	Description	Pilot ratio	Main ports size	Standard setting (bar, Q=5 l/min)	Adjust. range (bar)	Pressure increase (bar/turn)
MB000063	**MBSN-060-ALNE-04-G12-N350**	**4,2:1**	V1, V2: **G1/2"** M:**G1/4"** C1, C2: **G1/2"**	**350**	**100-350**	**138**
MB000200	**MBSN-060-ALNE-04-G12-N200**	**4,2:1**	V1, V2: **G1/2"** M:**G1/4"** C1, C2: **G1/2"**	**200**	**60-210**	**62**

OVERCENTRE VALVE

MBSN-060-ZLNA

SINGLE ACTING IN LINE PORTS

ATLANTIC Fluid Tech

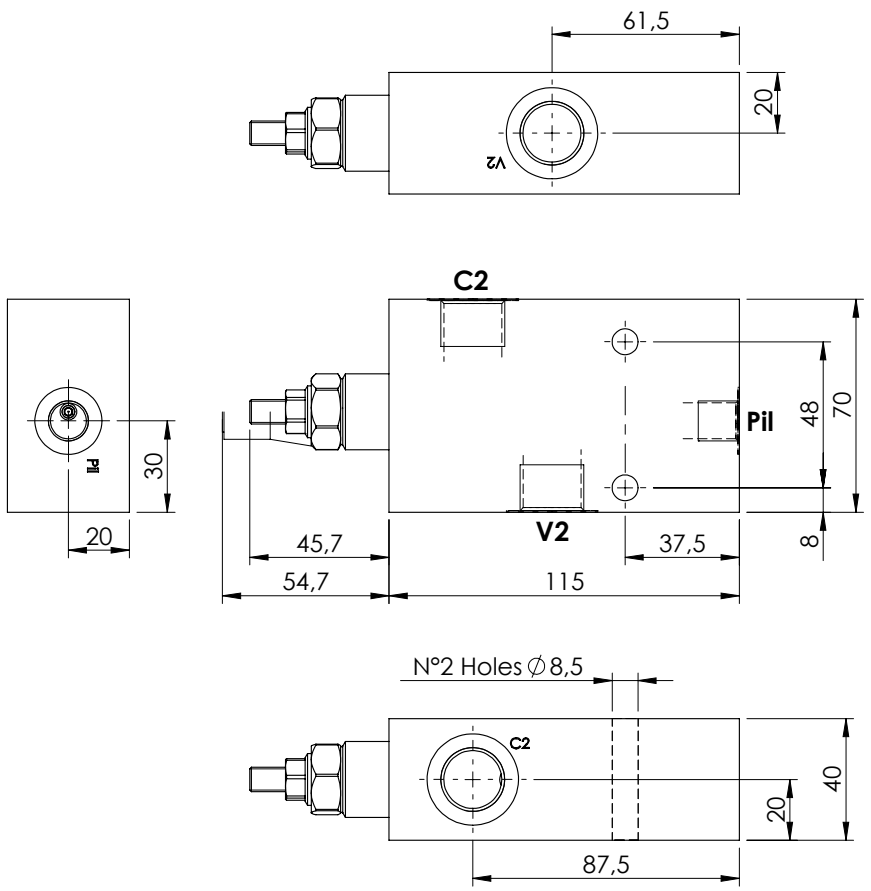

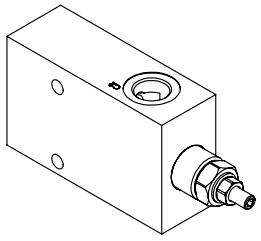

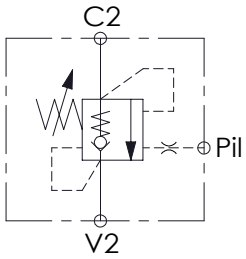

SPECIFICATIONS

Max. operating pressure:	**350 bar**
Rated flow:	**60 l/min**
Weight:	**0,9 kg**

SEALING CAP

Ordering code:

AT000020

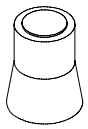

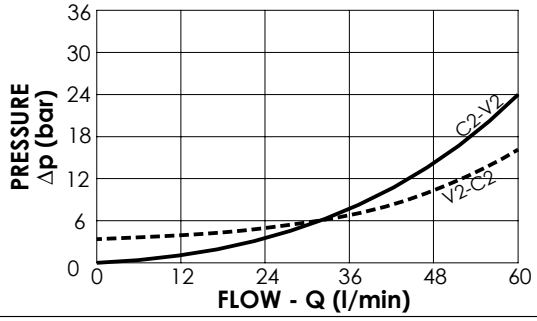

NOTES

Setting: at least 1.3 times the load induced pressure

ORDERING CODES

Quick code	Description	Pilot ratio	Manifold material	Main ports size	Standard setting (bar, Q=5 l/min)	Adjust. range (bar)	Pressure increase (bar/turn)
MB000579	**MBSN-060-ZLNA-04-G12-N350**	**4,2:1**	**Aluminium**	C2,V2: **G 1/2"** Pil: **G 1/4"**	**350**	**110-350**	**138**
MB000580	**MBSN-060-ZLNA-04-G12-N200**	**4,2:1**	**Aluminium**	C2,V2: **G 1/2"** Pil: **G 1/4"**	**200**	**60-210**	**62**
MB000581	**MBSN-060-ZLNA-07-G12-N350**	**7:1**	**Aluminium**	C2,V2: **G 1/2"** Pil: **G 1/4"**	**350**	**85-350**	**106**
MB000582	**MBSN-060-ZLNA-07-G12-N250**	**7:1**	**Aluminium**	C2,V2: **G 1/2"** Pil: **G 1/4"**	**250**	**40-250**	**46**

OVERCENTRE VALVE

MBSN-060-AANR

SINGLE ACTING ONE FLANGED PORT

ATLANTIC Fluid Tech

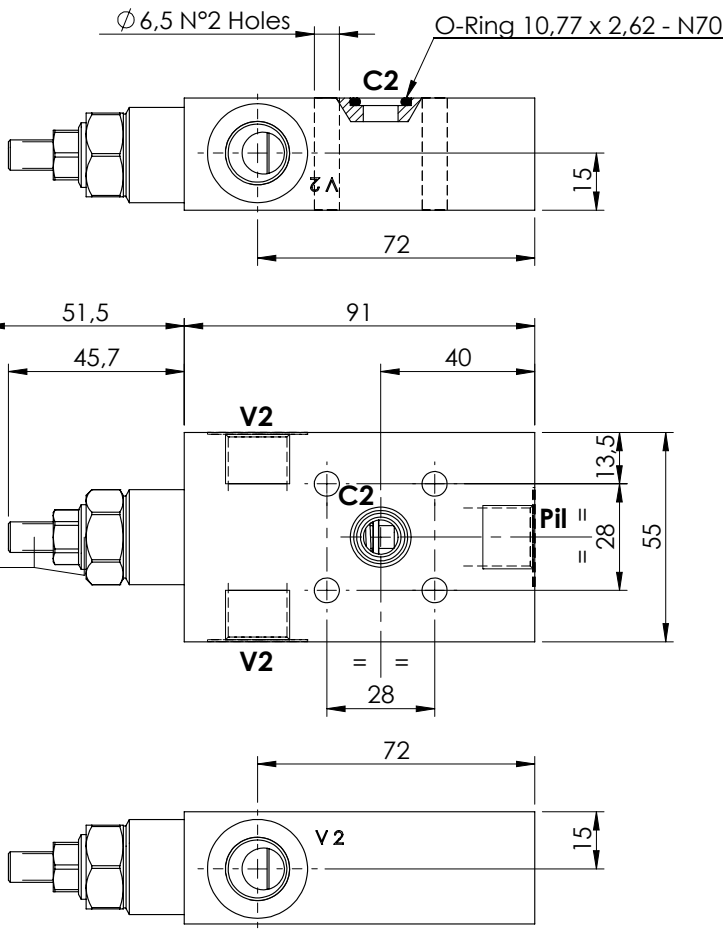

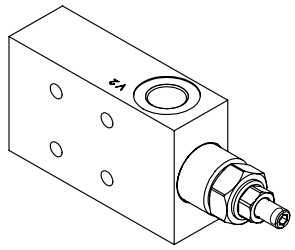

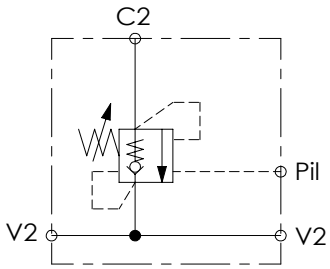

SPECIFICATIONS

Max. operating pressure:	**350 bar**
Rated flow:	**60 l/min**
Manifold:	**Steel**
Weight:	**1,09 kg**

SEALING CAP

Ordering code:

AT000020

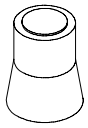

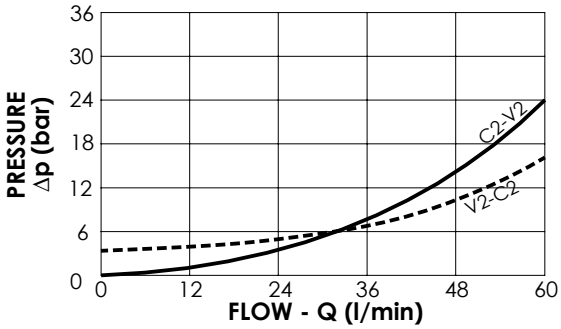

NOTES

Setting: at least 1.3 times the load induced pressure

ORDERING CODES

Quick code	Description	Pilot ratio	Main ports size	Standard setting (bar, Q=5 l/min)	Adjust. range (bar)	Pressure increase (bar/turn)
MB000017	**MBSN-060-AANR-04-G38-N350**	**4,2:1**	V2, Pil: **G3/8"** C2 : **Ø9**	**350**	**100-350**	**138**
MB000199	**MBSN-060-AANR-04-G38-N200**	**4,2:1**	V2, Pil: **G3/8"** C2 : **Ø9**	**200**	**60-210**	**62**

OVERCENTRE VALVE

MBSN-060-AATV

SINGLE ACTING ONE FLANGED PORT

ATLANTIC Fluid Tech

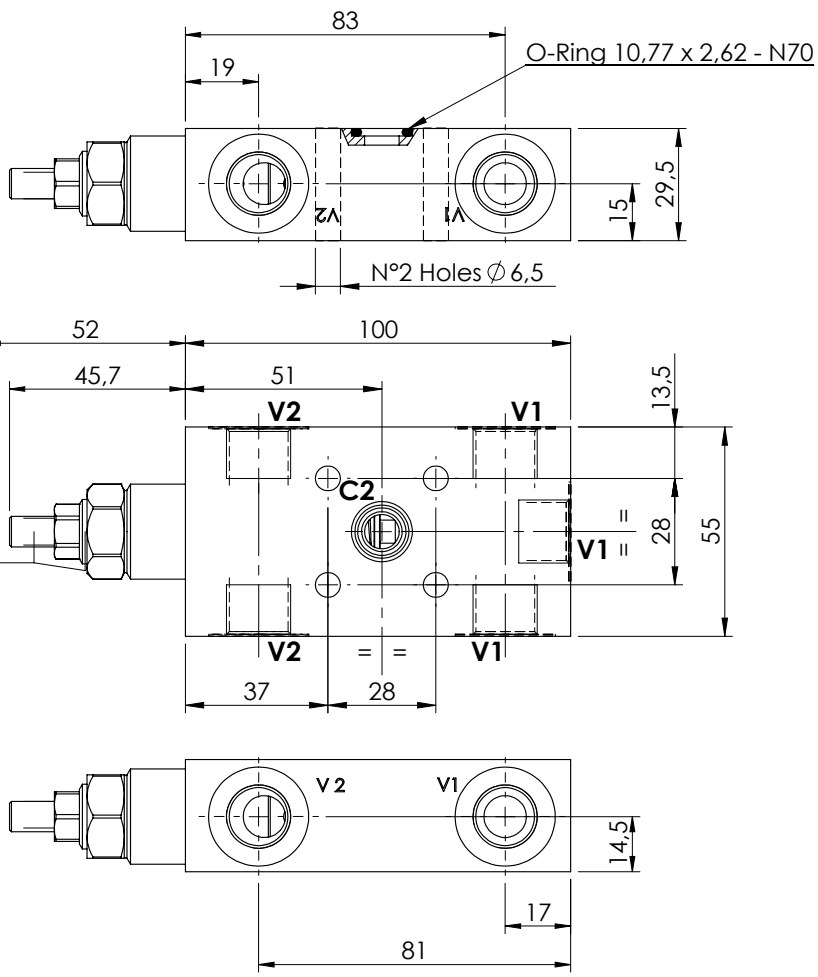

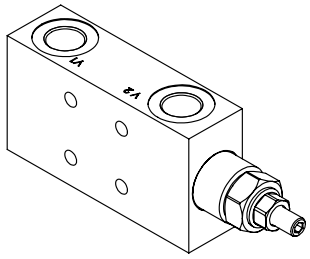

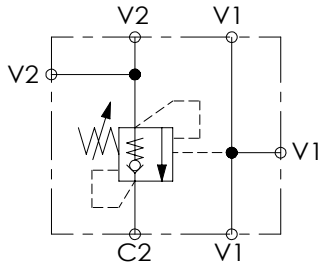

SPECIFICATIONS

Max. operating pressure:	**350 bar**
Rated flow:	**60 l/min**
Manifold:	**Steel**
Weight:	**1,14 kg**

SEALING CAP

Ordering code:

AT000020

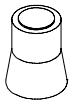

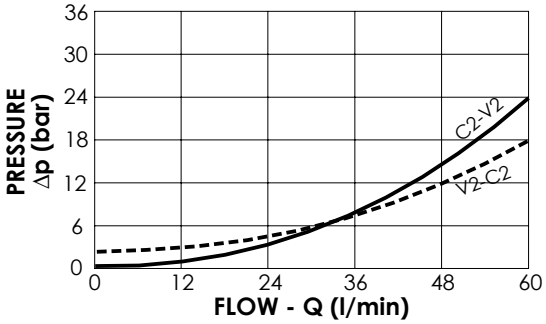

NOTES

Setting: at least 1.3 times the load induced pressure

ORDERING CODES

Quick code	Description	Pilot ratio	Main ports size	Standard setting (bar, Q=5 l/min)	Adjust. range (bar)	Pressure increase (bar/turn)
MB000236	**MBSN-060-AATV-04-G38-N350**	**4,2:1**	V1,V2: **G 3/8"** C2: ∅ **9**	**350**	**100-350**	**138**
MB000234	**MBSN-060-AATV-04-G38-N200**	**4,2:1**	V1,V2: **G 3/8"** C2: ∅ **9**	**200**	**60-210**	**62**

OVERCENTRE VALVE

MBSN-060-ABNP

SINGLE ACTING TWO FLANGED PORTS

ATLANTIC Fluid Tech

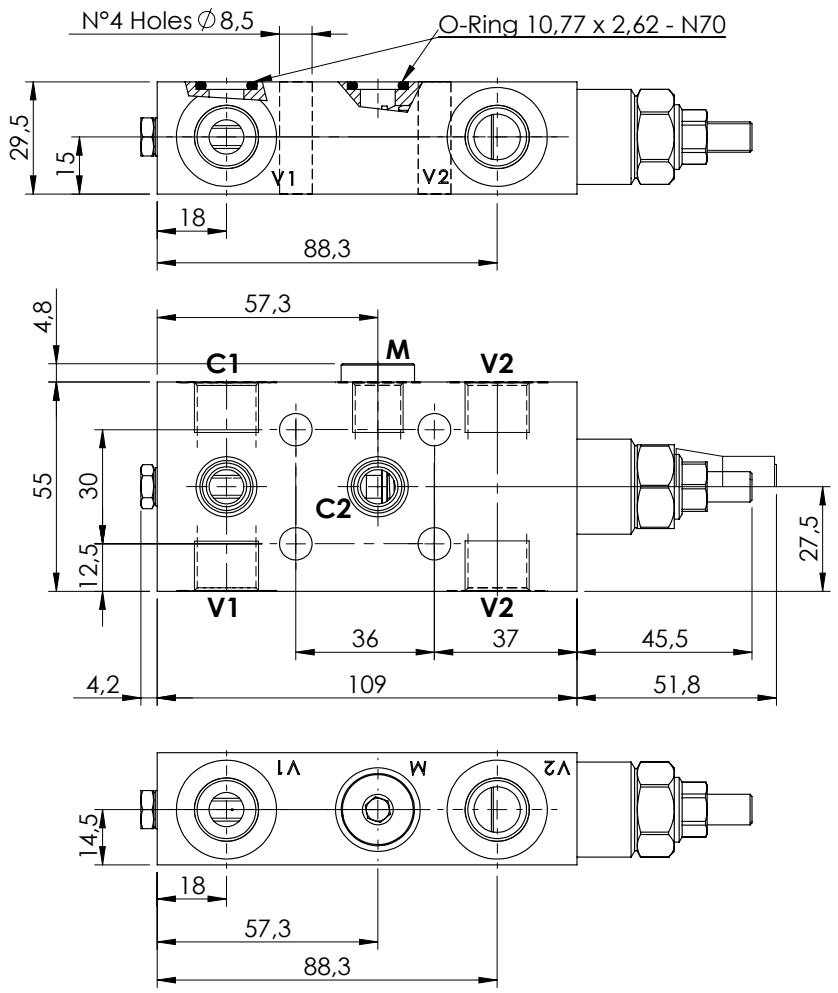

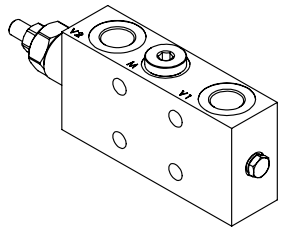

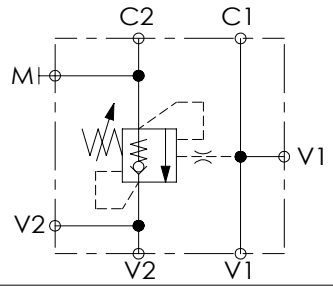

SPECIFICATIONS

Max. operating pressure:	**350 bar**
Rated flow:	**60 l/min**
Manifold:	**Steel**
Weight:	**1,27 kg**

SEALING CAP

Ordering code:

AT000020

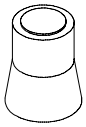

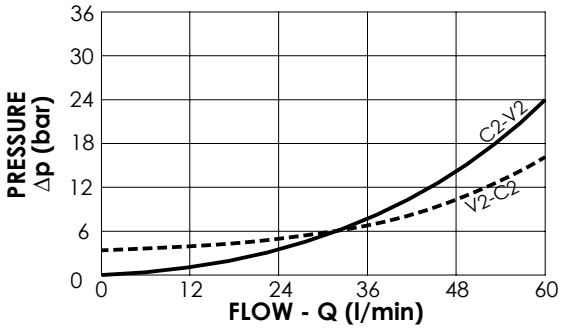

NOTES

Setting: at least 1.3 times the load induced pressure

ORDERING CODES

Quick code	Description	Pilot ratio	Main ports size	Standard setting (bar, Q=5 l/min)	Adjust. range (bar)	Pressure increase (bar/turn)
MB000139	**MBSN-060-ABNP-04-G38-N350**	**4,2:1**	V1, V2: **G3/8"** M:**G1/4"** C1, C2: **Ø 9**	**350**	**100-350**	**138**
MB000914	**MBSN-060-ABNP-04-G38-N200**	**4,2:1**	V1, V2: **G3/8"** M:**G1/4"** C1, C2: **Ø 9**	**200**	**60-210**	**62**

OVERCENTRE VALVE

MBSN-060-ABNP

SINGLE ACTING TWO FLANGED PORTS

ATLANTIC Fluid Tech

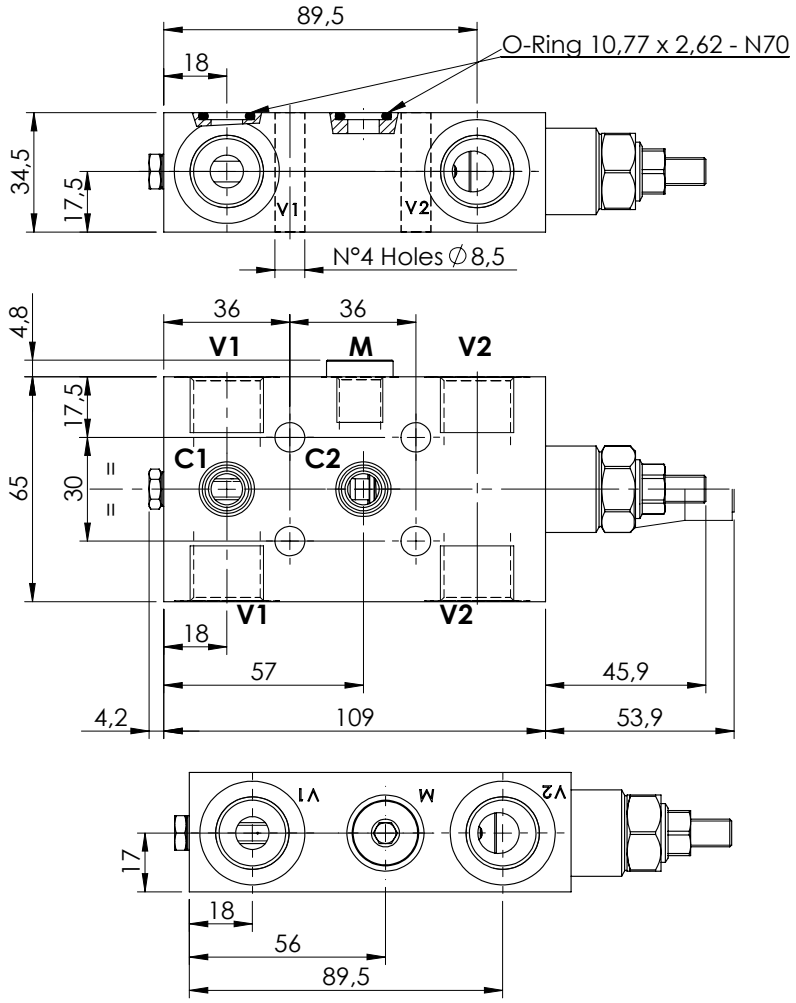

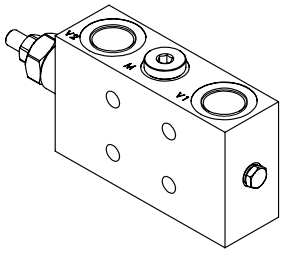

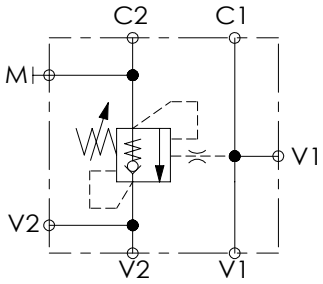

SPECIFICATIONS

Max. operating pressure:	**350 bar**
Rated flow:	**60 l/min**
Manifold:	**Steel**
Weight:	**1,69 kg**

SEALING CAP

Ordering code:

AT000020

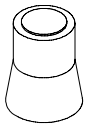

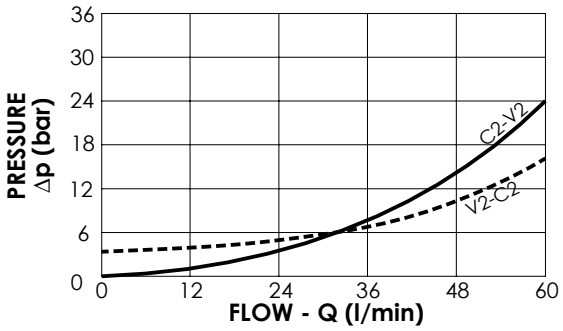

NOTES

Setting: at least 1.3 times the load induced pressure

ORDERING CODES

Quick code	Description	Pilot ratio	Main ports size	Standard setting (bar, Q=5 l/min)	Adjust. range (bar)	Pressure increase (bar/turn)
MB000140	**MBSN-060-ABNP-04-G12-N350**	**4,2:1**	V1, V2 :**G1/2"** M:**G1/4"** C1, C2 : **Ø9**	**350**	**100-350**	**138**

OVERCENTRE VALVE

MBSN-150-ALNV

SINGLE ACTING

ATLANTIC Fluid Tech

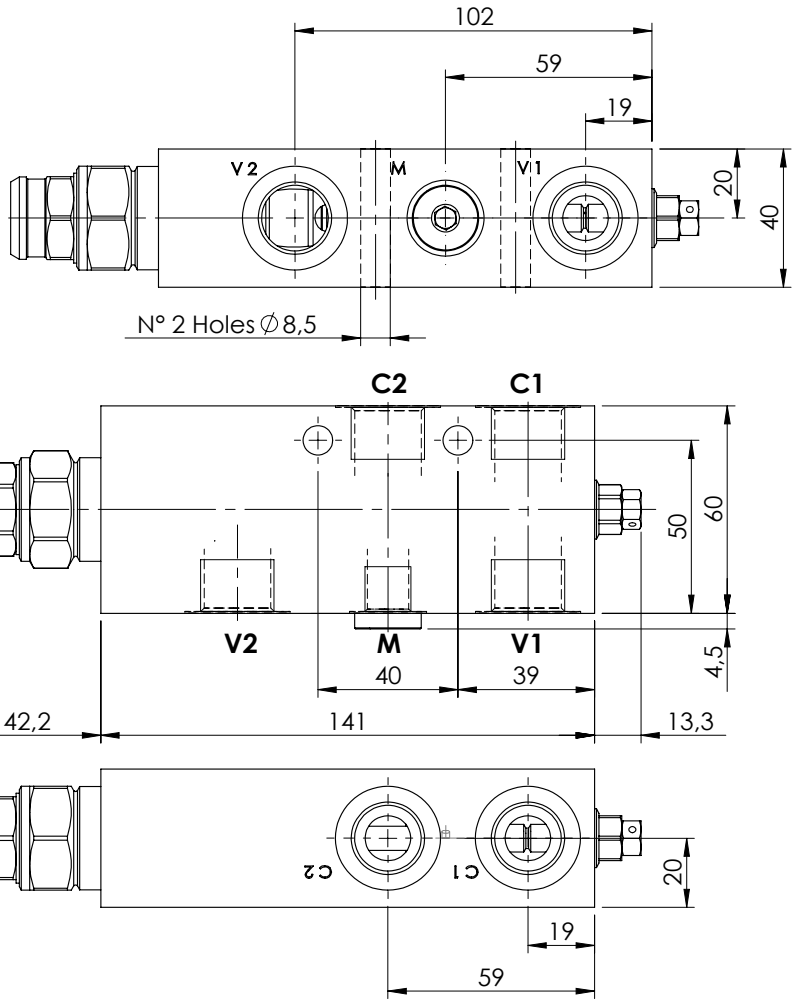

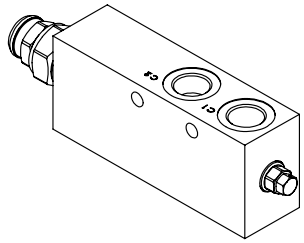

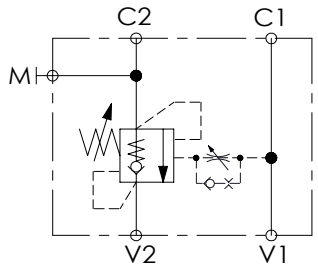

SPECIFICATIONS

Max. operating pressure:	**350 bar**
Rated flow:	**150 l/min**
Manifold:	**Steel**
Weight:	**2,49 kg**

SEALING CAP

Ordering code:

ST000012

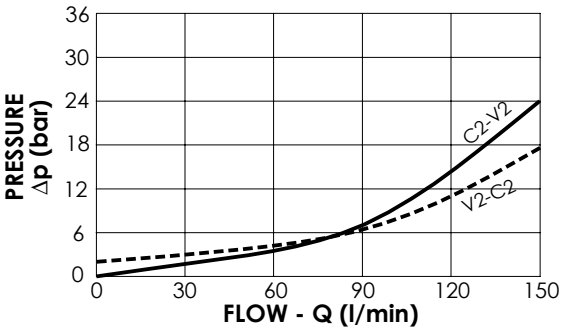

NOTES

Setting: at least 1.3 times the load induced pressure

ORDERING CODES

Quick code	Description	Pilot ratio	Main ports size	Standard setting (bar, Q=5 l/min)	Adjust. range (bar)	Pressure increase (bar/turn)
MB000047	**MBSN-150-ALNV-04-G12-N350**	**4:1**	V1,V2: **G 1/2"** M: **G1/4"** C1, C2: **G1/2"**	**350**	**100-350**	**104**

OVERCENTRE VALVE

MBSN-150-ALNV

SINGLE ACTING

ATLANTIC Fluid Tech

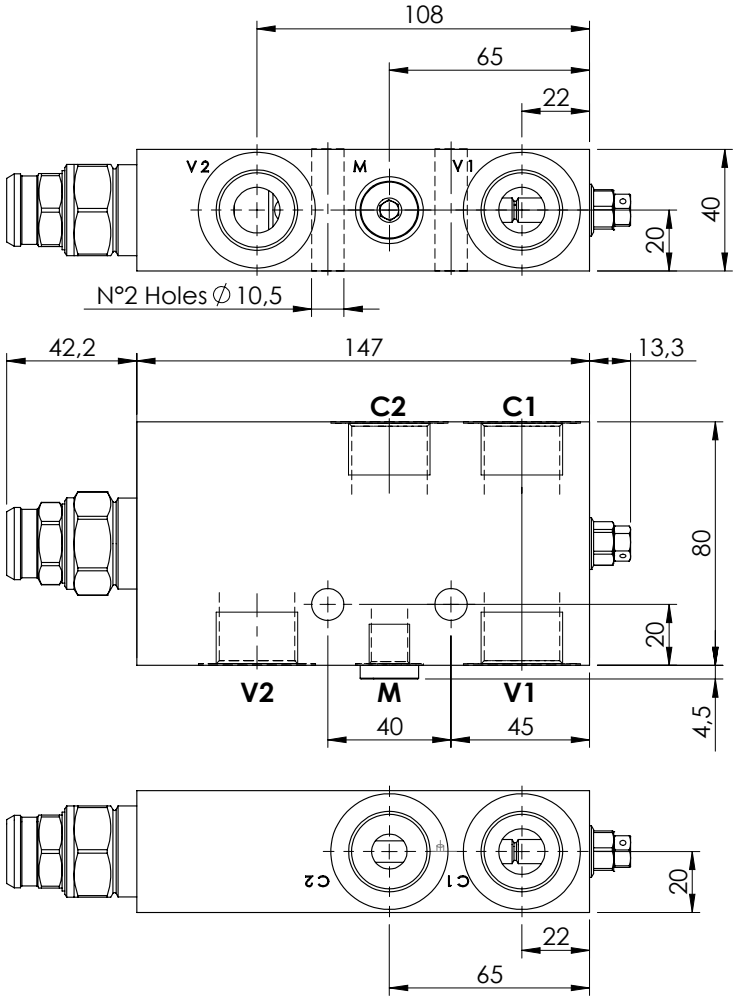

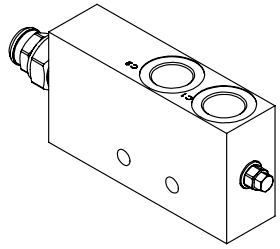

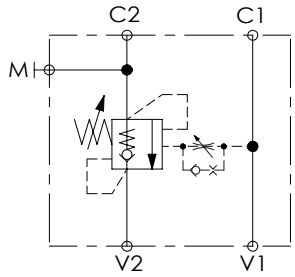

SPECIFICATIONS

Max. operating pressure:	**350 bar**
Rated flow:	**150 l/min**
Manifold:	**Steel**
Weight:	**3,25 kg**

SEALING CAP

Ordering code:

ST000012

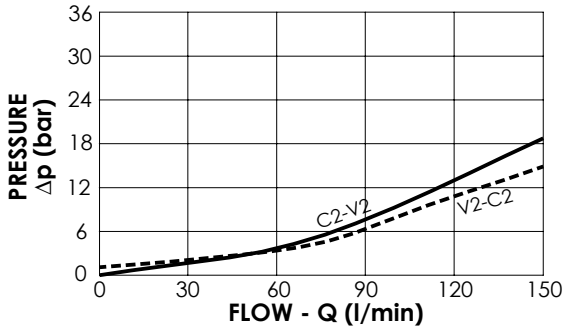

NOTES

Setting: at least 1.3 times the load induced pressure

ORDERING CODES

Quick code	Description	Pilot ratio	Main ports size	Standard setting (bar, Q=5 l/min)	Adjust. range (bar)	Pressure increase (bar/turn)
MB000215	**MBSN-150-ALNV-04-G34-N350**	**4:1**	V1, V2: **G3/4"** M:**G1/4"** C1, C2: **G3/4"**	**350**	**100-350**	**104**

OVERCENTRE VALVE

MBSN-150-AANV

SINGLE ACTING ONE FLANGED PORT

ATLANTIC Fluid Tech

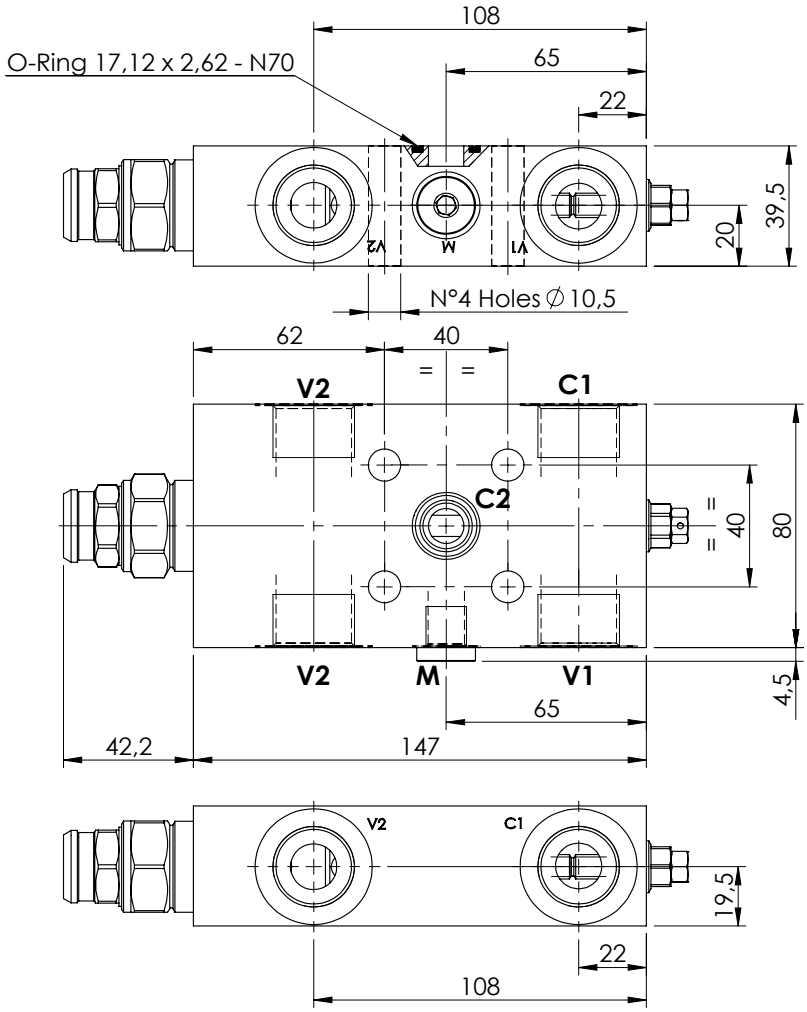

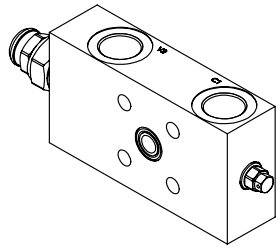

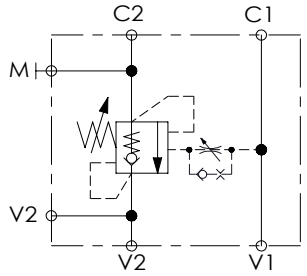

SPECIFICATIONS

Max. operating pressure:	**350 bar**
Rated flow:	**150 l/min**
Manifold:	**Steel**
Weight:	**3,14 kg**

SEALING CAP

Ordering code:

ST000012

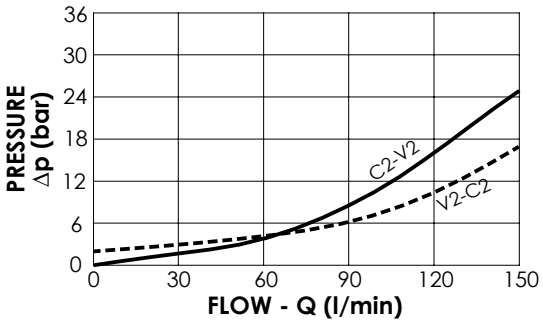

NOTES

Setting: at least 1.3 times the load induced pressure

ORDERING CODES

Quick code	Description	Pilot ratio	Main ports size	Standard setting (bar, Q=5 l/min)	Adjust. range (bar)	Pressure increase (bar/turn)
MB000426	**MBSN-150-AANV-04-G34-N350**	**4:1**	V1, V2, C1: **G3/4"** M: **G1/4"** C2: **Ø11.5**	**350**	**100-350**	**104**

OVERCENTRE VALVE

MBSN-150-ABNV

SINGLE ACTING TWO FLANGED PORTS

ATLANTIC Fluid Tech

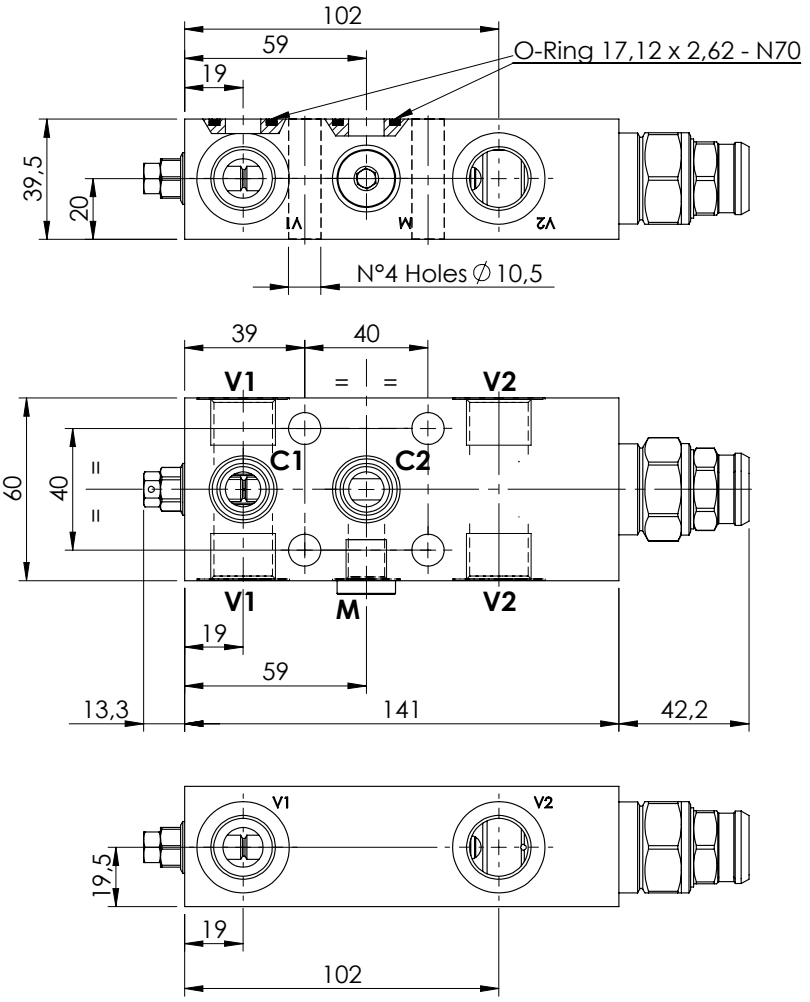

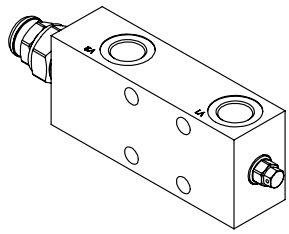

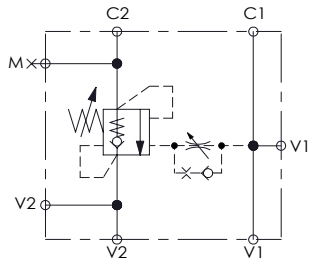

SPECIFICATIONS

Max. operating pressure:	**350 bar**
Rated flow:	**150 l/min**
Manifold:	**Steel**
Weight:	**2,37 kg**

SEALING CAP

Ordering code:

ST000012

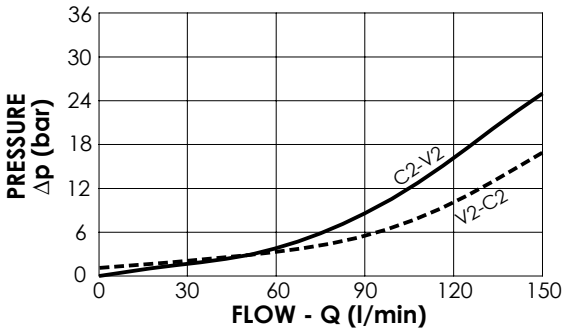

NOTES

Setting: at least 1.3 times the load induced pressure

ORDERING CODES

Quick code	Description	Pilot ratio	Main ports size	Standard setting (bar, Q=5 l/min)	Adjust. range (bar)	Pressure increase (bar/turn)
MB000156	**MBSN-150-ABNV-04-G12-N350**	**4:1**	V1, V2: **G1/2"** M:**G1/4"** C1, C2: **Ø11.5**	**350**	**100-350**	**104**
MB000883	**MBSN-150-ABNV-08-G12-N350**	**8:1**	V1, V2: **G1/2"** M:**G1/4"** C1, C2: **Ø11.5**	**350**	**100-350**	**84**

OVERCENTRE VALVE

MBSN-150-ABNV

SINGLE ACTING
TWO FLANGED PORTS

ATLANTIC Fluid Tech

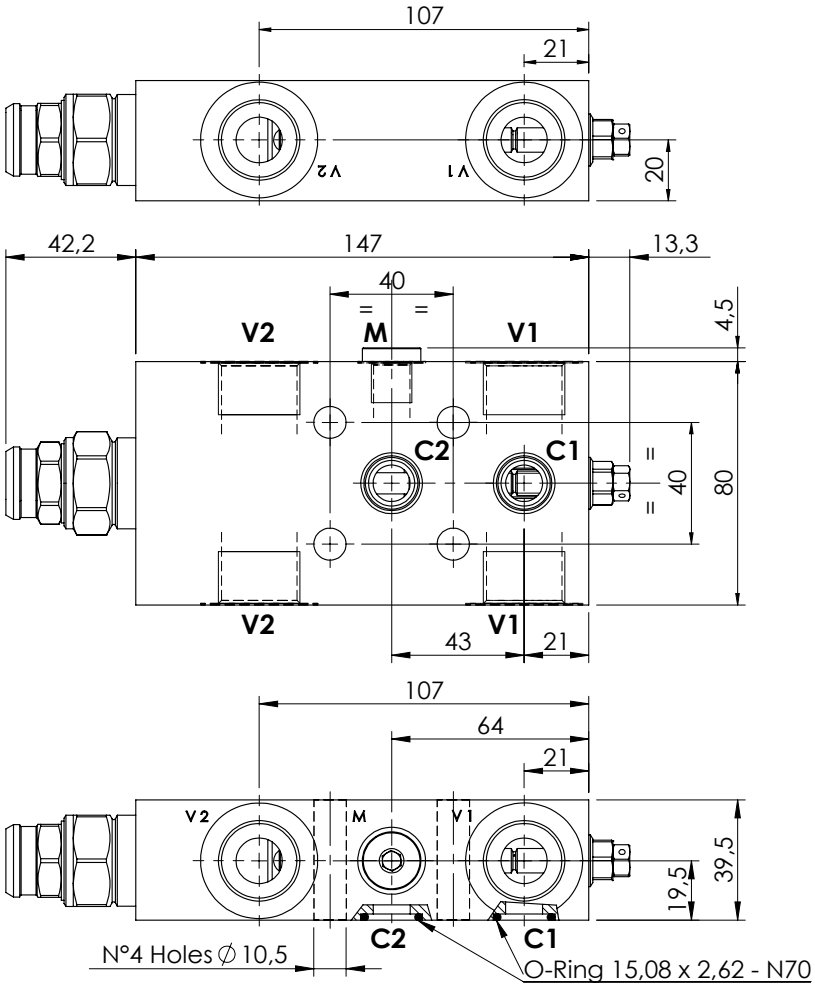

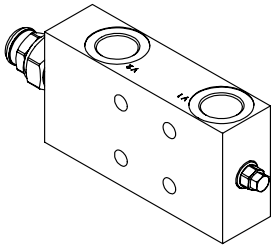

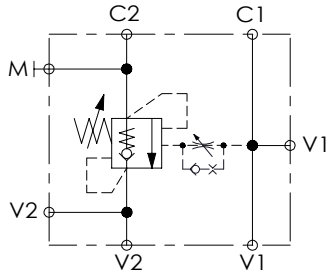

SPECIFICATIONS

Max. operating pressure:	**350 bar**
Rated flow:	**150 l/min**
Manifold:	**Steel**
Weight:	**3,13 kg**

SEALING CAP

Ordering code:

ST000012

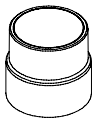

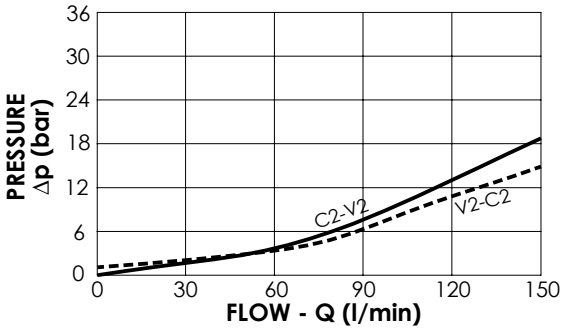

NOTES

Setting: at least 1.3 times the load induced pressure

ORDERING CODES

Quick code	Description	Pilot ratio	Main ports size	Standard setting (bar, Q=5 l/min)	Adjust. range (bar)	Pressure increase (bar/turn)
MB000216	**MBSN-150-ABNV-04-G34-N350**	**4:1**	V1, V2: **G3/4"** M: **G1/4"** C1, C2: **Ø12**	**350**	**100-350**	**104**

OVERCENTRE VALVE

MBSN-300-ZLNP

SINGLE ACTING IN LINE PORTS

ATLANTIC Fluid Tech

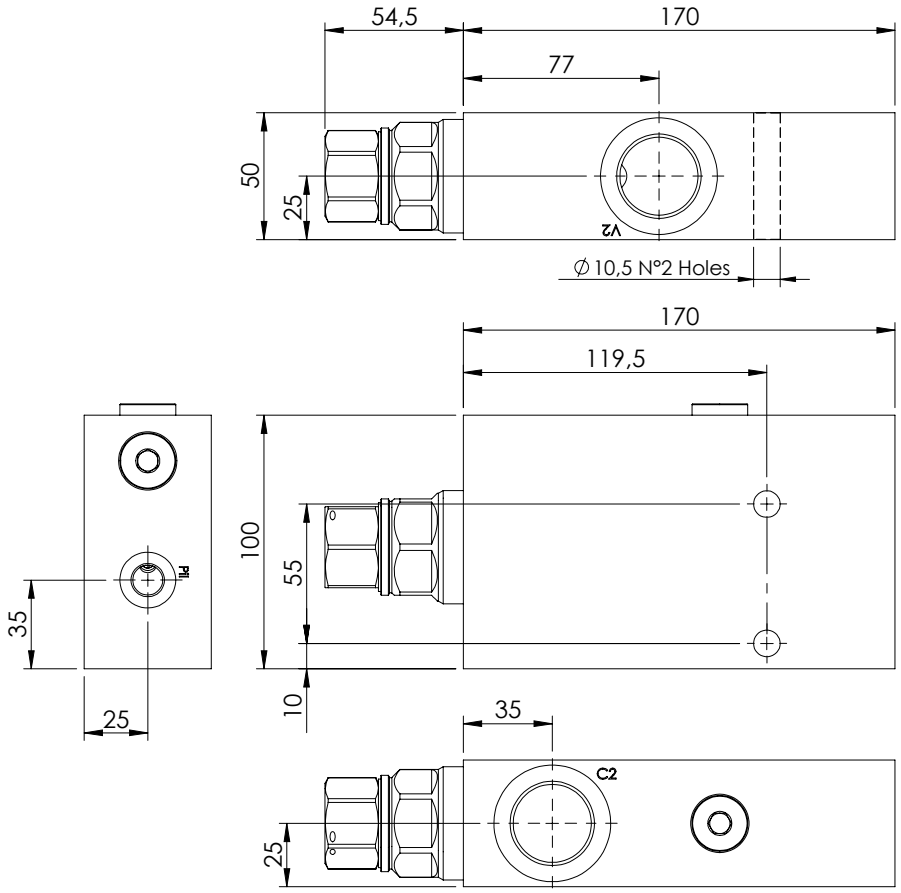

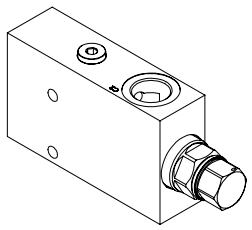

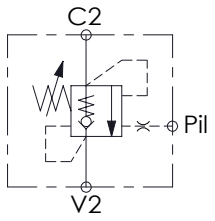

SPECIFICATIONS

Max. operating pressure:	350 bar
Rated flow:	300 l/min
Weight: Aluminium 2,61 kg;Steel 6,14 kg	

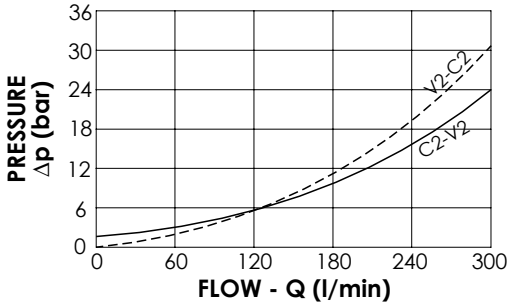

NOTES

Setting: at least 1.3 times the load induced pressure

ORDERING CODES

Quick code	Description	Pilot ratio	Manifold material	Main ports size	Standard setting (bar, Q=5 l/min)	Adjust. range (bar)	Pressure increase (bar/turn)
MB000720	MBSN-300-ZLNP-04-G10-N350	4:1	Aluminium	C2,V2: **G 1"** Pil: **G 1/4"**	350	100-350	75
MB000834	MBSN-300-ALNP-04-G10-N350	4:1	Steel	C2,V2: **G 1"** Pil: **G 1/4"**	350	100-350	75
MB000836	MBSN-300-ALNP-04-G10-N200	4:1	Steel	C2,V2: **G 1"** Pil: **G 1/4"**	200	60-210	46

OVERCENTRE VALVE

MBSP-060-ZLSE

SINGLE ACTING RELIEF COMPENSATED

ATLANTIC Fluid Tech

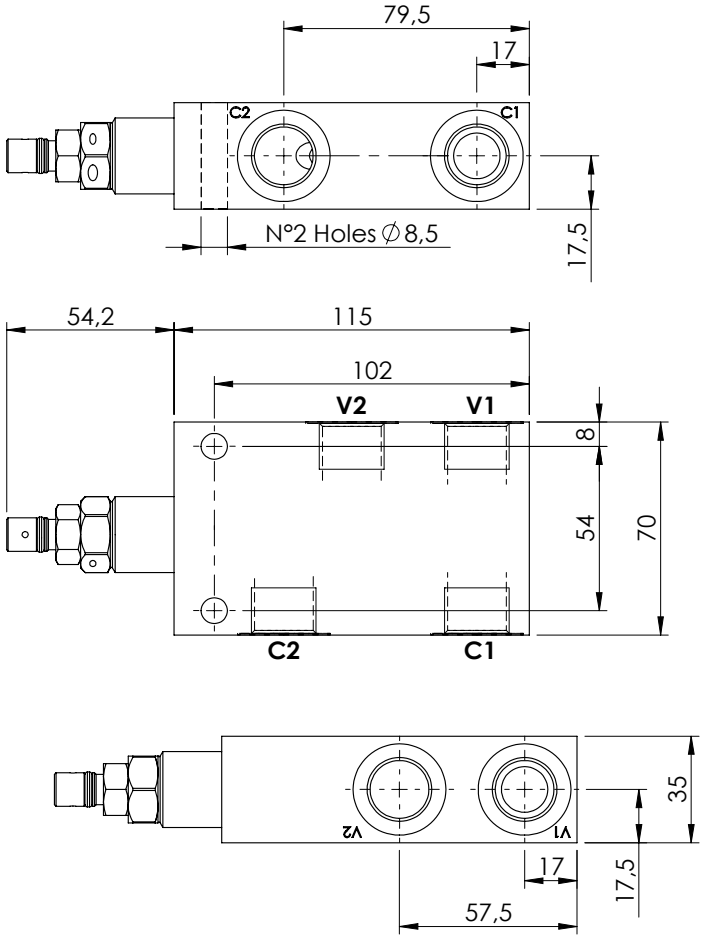

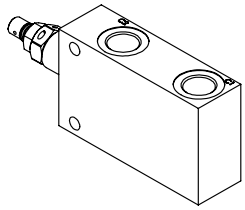

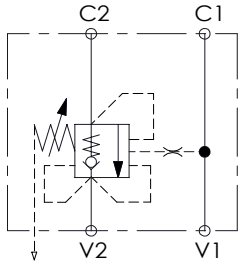

SPECIFICATIONS

Max. operating pressure:	**350 bar**
Rated flow:	**60 l/min**
Manifold:	**Aluminium**
Weight:	**0,8 Kg**

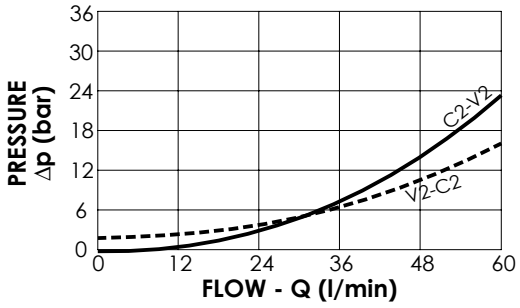

NOTES

Setting: at least 1.3 times the load induced pressure

ORDERING CODES

Quick code	Description	Pilot ratio	Main ports size	Standard setting (bar,Q=5 l/min)	Adjust. range (bar)	Pressure increase (bar/turn)
MB000722	**MBSP-060-ZLSE-04-G12-N350**	**4,2:1**	V1, V2: **G1/2"** C1, C2: **G1/2"**	**350**	**100-350**	**138**

OVERCENTRE VALVE

MBSP-060-ALNP

SINGLE ACTING RELIEF COMPENSATED

ATLANTIC Fluid Tech

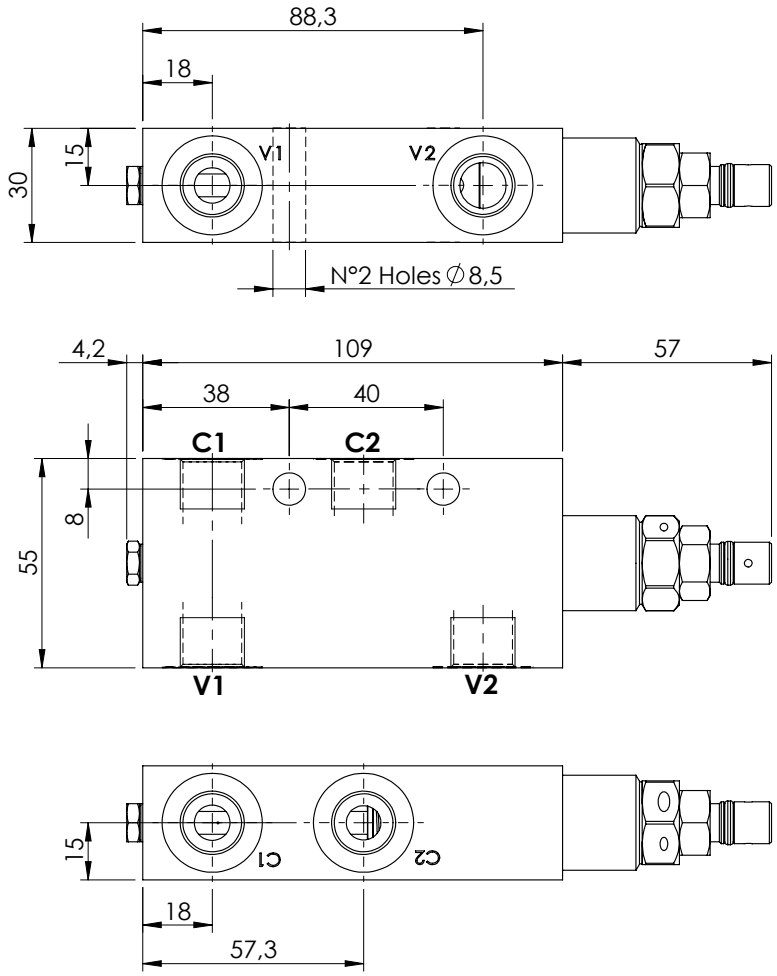

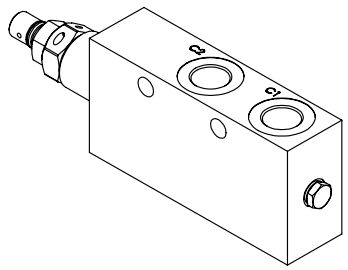

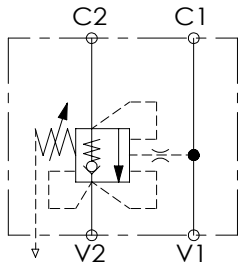

SPECIFICATIONS

Max. operating pressure:	**350 bar**
Rated flow:	**60 l/min**
Manifold:	**Steel**
Weight:	**1,35 kg**

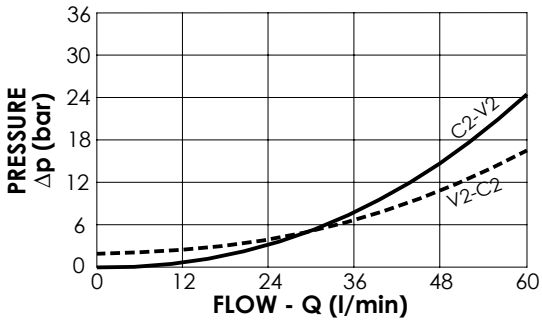

NOTES

Setting: at least 1.3 times the load induced pressure

ORDERING CODES

Quick code	Description	Pilot ratio	Main ports size	Standard setting (bar, Q=5 l/min)	Adjust. range (bar)	Pressure increase (bar/turn)
MB000209	**MBSP-060-ALNP-04-G38-N350**	**4,2:1**	V1, V2: **G3/8"** C1, C2: **G3/8"**	**350**	**100-350**	**166**
MB000896	**MBSP-060-ALNP-04-G38-N200**	**4,2:1**	V1, V2: **G3/8"** C1, C2: **G3/8"**	**200**	**60-210**	**75**

OVERCENTRE VALVE

MBSP-060-ALNE

SINGLE ACTING RELIEF COMPENSATED

ATLANTIC Fluid Tech

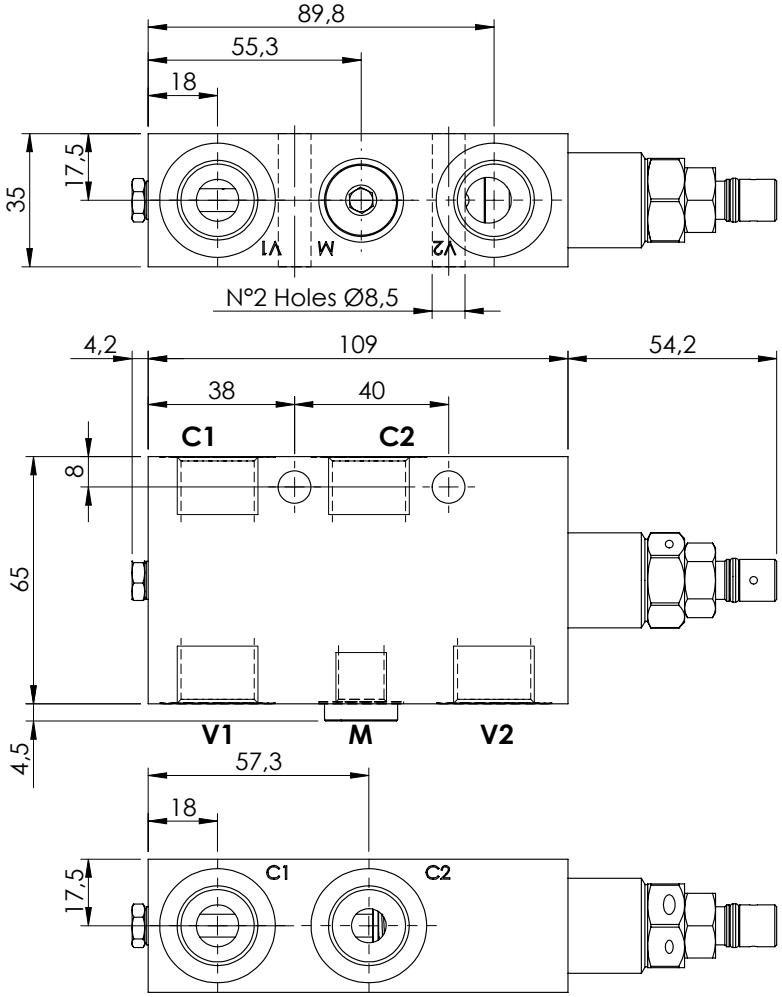

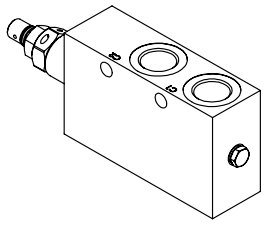

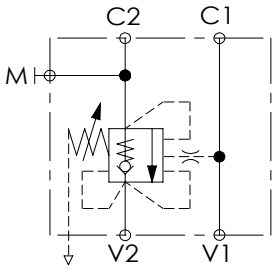

SPECIFICATIONS

Max. operating pressure:	**350 bar**
Rated flow:	**60 l/min**
Manifold:	**Steel**
Weight:	**1,8 kg**

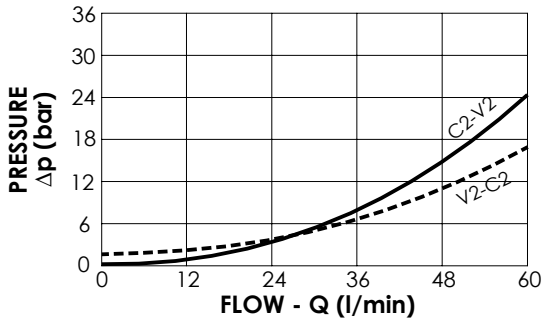

NOTES

Setting: at least 1.3 times the load induced pressure

ORDERING CODES

Quick code	Description	Pilot ratio	Main ports size	Standard setting (bar, Q=5 l/min)	Adjust. range (bar)	Pressure increase (bar/turn)
MB000197	**MBSP-060-ALNE-04-G12-N350**	**4,2:1**	V1,V2,C1,C2: **G1/2"** M: **G1/4"**	**350**	**100-350**	**139**

OVERCENTRE VALVE

MBSN-060-ABNE

SINGLE ACTING
TWO FLANGED PORTS
RELIEF COMPENSATED

ATLANTIC Fluid Tech

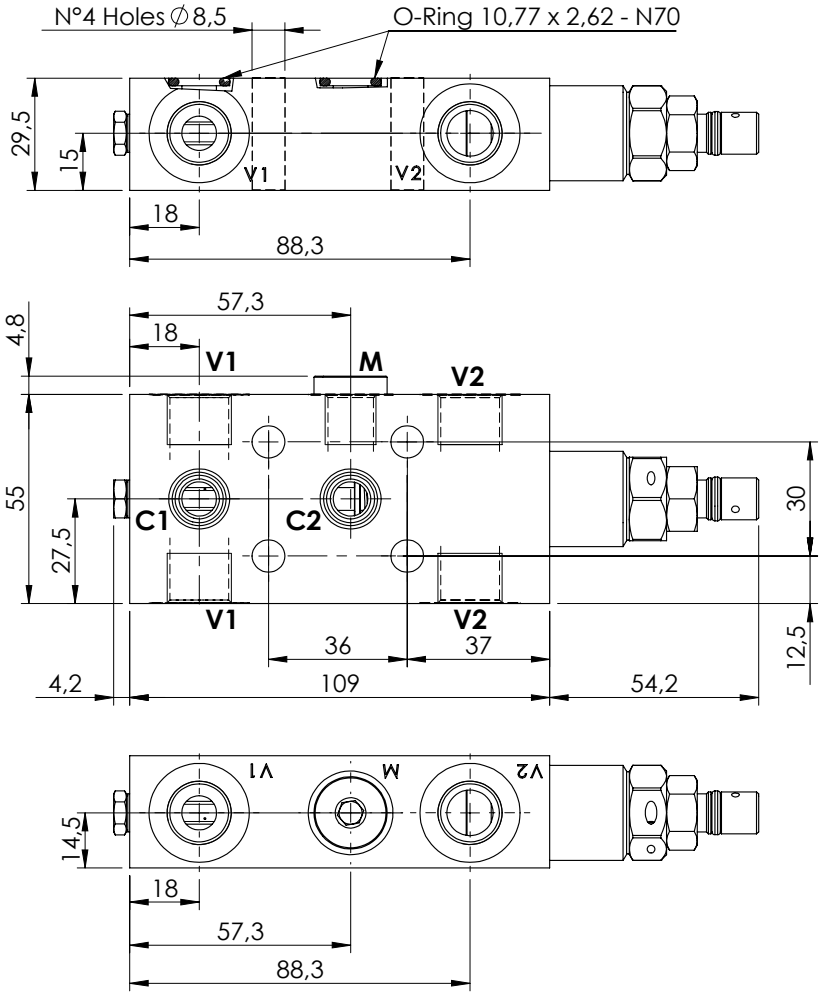

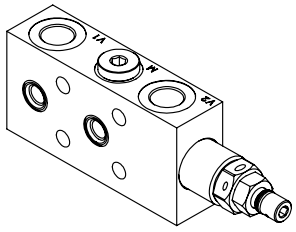

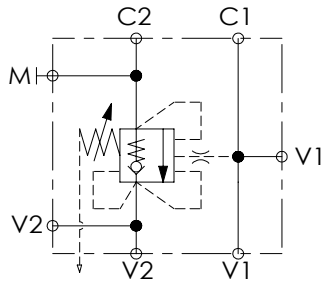

SPECIFICATIONS

Max. operating pressure:	**350 bar**
Rated flow:	**60 l/min**
Manifold:	**Steel**
Weight:	**1,29 kg**

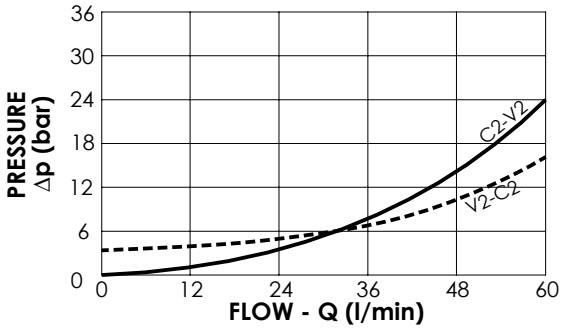

NOTES

Setting: at least 1.3 times the load induced pressure

ORDERING CODES

Quick code	Description	Pilot ratio	Main ports size	Standard setting (bar, Q=5 l/min)	Adjust. range (bar)	Pressure increase (bar/turn)
MB000473	**MBSP-060-ABNE-04-G38-N350**	**4,2:1**	V1, V2: **G3/8"** M:**G1/4"** C1, C2: **Ø 9**	**350**	**100-350**	**166**
MB001018	**MBSP-060-ABNE-04-G38-N200**	**4,2:1**	V1, V2: **G3/8"** M:**G1/4"** C1, C2: **Ø 9**	**200**	**60-210**	**75**

OVERCENTRE VALVE

MBSP-060-ABNP

SINGLE ACTING
TWO FLANGED PORTS
RELIEF COMPENSATED

ATLANTIC Fluid Tech

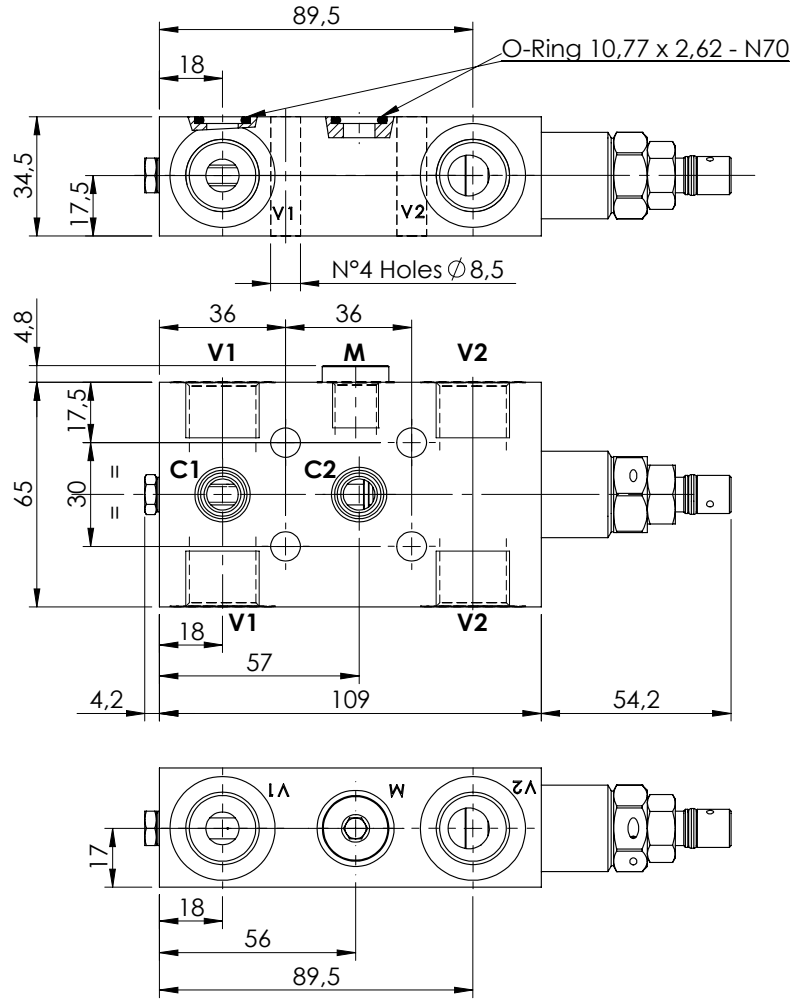

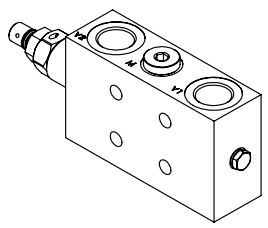

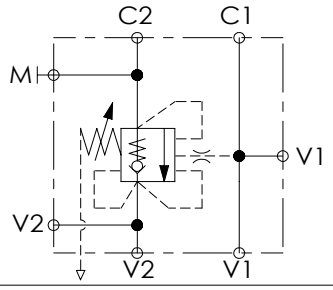

SPECIFICATIONS

Max. operating pressure:	**350 bar**
Rated flow:	**60 l/min**
Manifold:	**Steel**
Weight:	**1,72 kg**

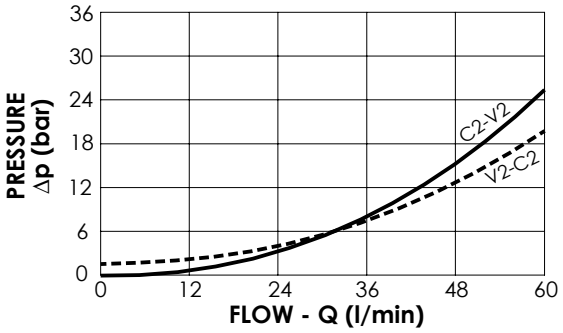

NOTES

Setting: at least 1.3 times the load induced pressure

ORDERING CODES

Quick code	Description	Pilot ratio	Main ports size	Standard setting (bar, Q=5 l/min)	Adjust. range (bar)	Pressure increase (bar/turn)
MB000335	**MBSP-060-ABNP-04-G12-N350**	**4,2:1**	V1, V2 :**G1/2"** M:**G1/4"** C1, C2 : **Ø9**	**350**	**100-350**	**138**

OVERCENTRE VALVE

MBSP-150-ZLSE

SINGLE ACTING RELIEF COMPENSATED

ATLANTIC Fluid Tech

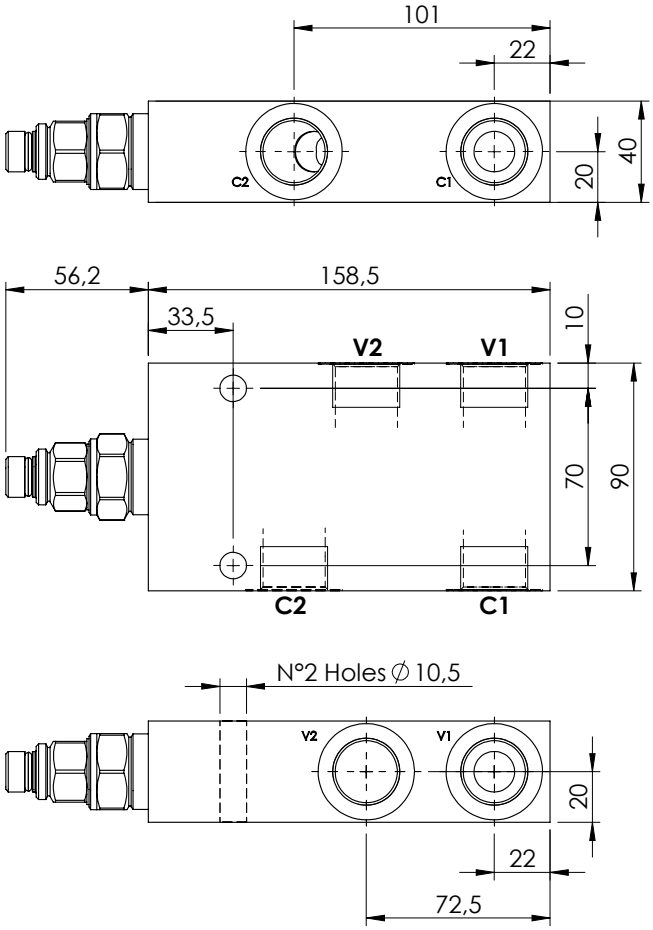

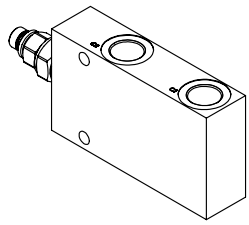

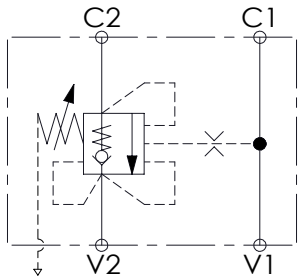

SPECIFICATIONS

Max. operating pressure:	**350 bar**
Rated flow:	**150 l/min**
Weight:	**Aluminium 1,6 kg; Steel 3.9 kg**

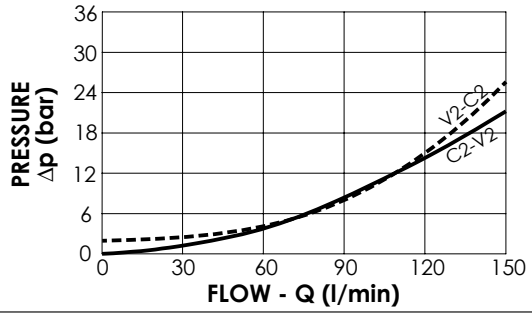

NOTES

Setting: at least 1.3 times the load induced pressure

ORDERING CODES

Quick code	Description	Pilot ratio	Manifold material	Main ports size	Standard setting (bar, Q=5 l/min)	Adjust. range (bar)	Pressure increase (bar/turn)
MB000500	**MBSP-150-ZLSE-08-G34-N350**	**8:1**	**Aluminium**	V1, V2: **G3/4"** C1, C2: **G3/4"**	**350**	**100-350**	**83**
MB000501	**MBSP-150-ZLSE-08-G34-N200**	**8:1**	**Aluminium**	V1, V2: **G3/4"** C1, C2: **G3/4"**	**200**	**60-210**	**47**
MB000502	**MBSP-150-ALDE-08-G34-N350**	**8:1**	**Steel**	V1, V2: **G3/4"** C1, C2: **G3/4"**	**350**	**100-350**	**83**
MB000503	**MBSP-150-ALDE-08-G34-N200**	**8:1**	**Steel**	V1, V2: **G3/4"** C1, C2: **G3/4"**	**200**	**60-210**	**47**
MB000504	**MBSP-150-ZLSE-04-G34-N350**	**4:1**	**Aluminium**	V1, V2: **G3/4"** C1, C2: **G3/4"**	**350**	**100-350**	**104**
MB000505	**MBSP-150-ZLSE-04-G34-N200**	**4:1**	**Aluminium**	V1, V2: **G3/4"** C1, C2: **G3/4"**	**200**	**60-210**	**56**
MB000506	**MBSP-150-ALDE-04-G34-N350**	**4:1**	**Steel**	V1, V2: **G3/4"** C1, C2: **G3/4"**	**350**	**100-350**	**104**
MB000507	**MBSP-150-ALDE-04-G34-N200**	**4:1**	**Steel**	V1, V2: **G3/4"** C1, C2: **G3/4"**	**200**	**60-210**	**56**

OVERCENTRE VALVE

MBST-150-AANV

SINGLE ACTING
ONE FLANGED PORT
FULLY COMPENSATED

ATLANTIC Fluid Tech

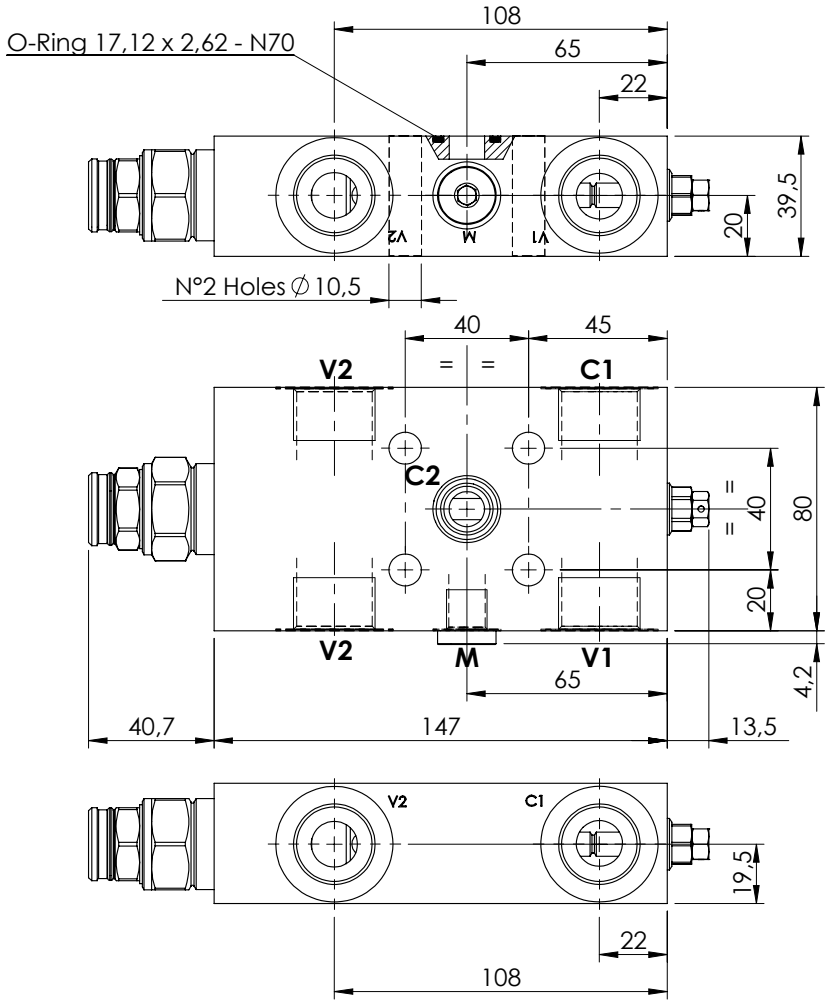

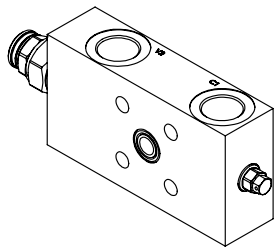

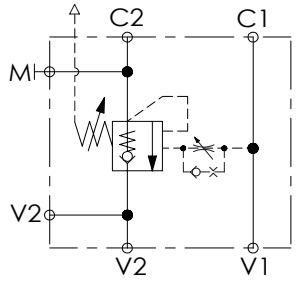

SPECIFICATIONS

Max. operating pressure:	**350 bar**
Rated flow:	**150 l/min**
Manifold:	**Steel**
Weight:	**3,13 kg**

SEALING CAP

Ordering code:
ST000012

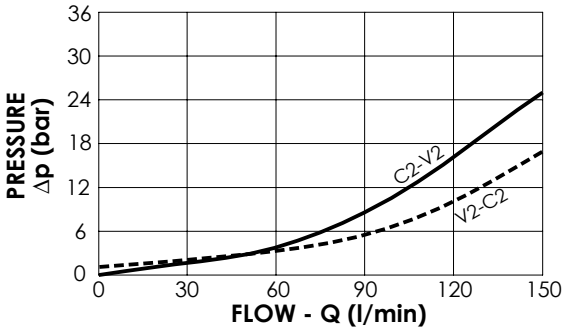

NOTES

Setting: at least 1.3 times the load induced pressure

ORDERING CODES

Quick code	Description	Pilot ratio	Main ports size	Standard setting (bar, Q=5 l/min)	Adjust. range (bar)	Pressure increase (bar/turn)
MB000267	**MBST-150-AANV-04-G34-N350**	**4:1**	V1, V2, C1: **G3/4"** M: **G1/4"** C2: **Ø11.5**	**350**	**100-350**	**104**

OVERCENTRE VALVE

MBST-150-ABNV

SINGLE ACTING
TWO FLANGED PORTS
FULLY COMPENSATED

ATLANTIC Fluid Tech

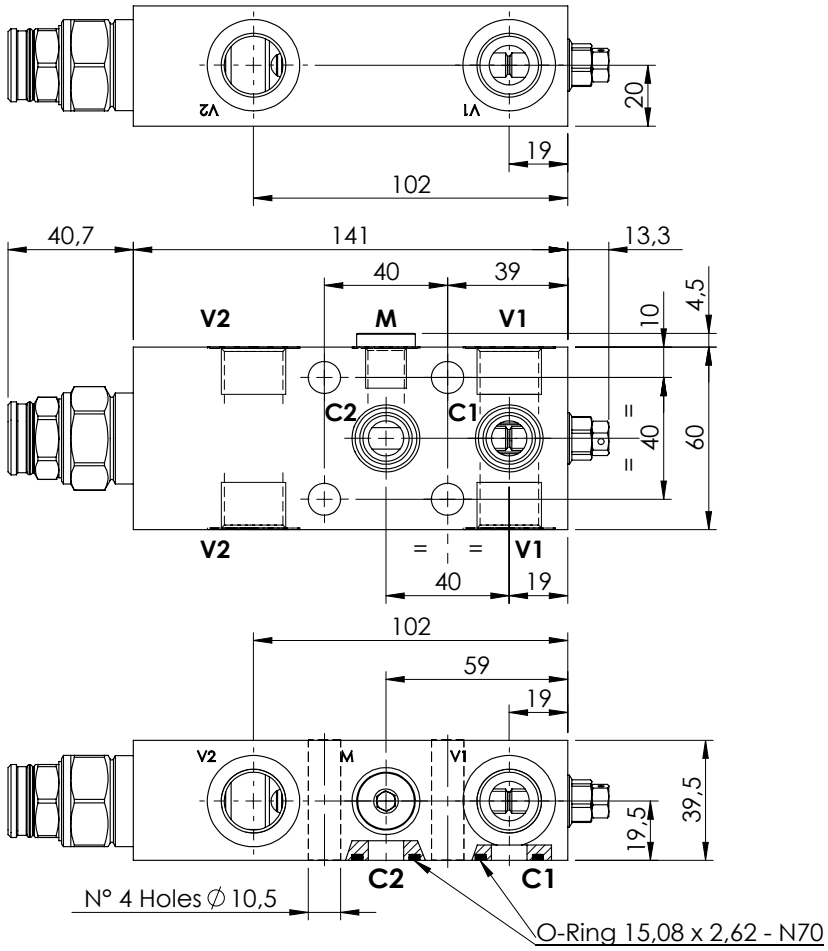

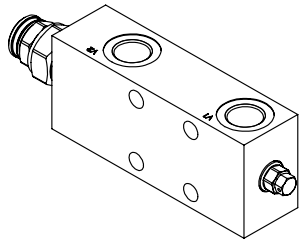

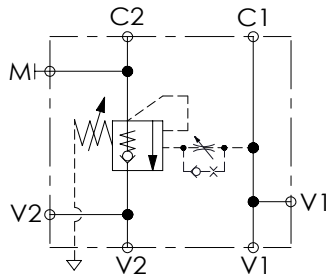

SPECIFICATIONS

Max. operating pressure:	**350 bar**
Rated flow:	**150 l/min**
Manifold:	**Steel**
Weight:	**2,36 kg**

SEALING CAP

Ordering code:

ST000012

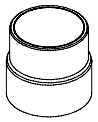

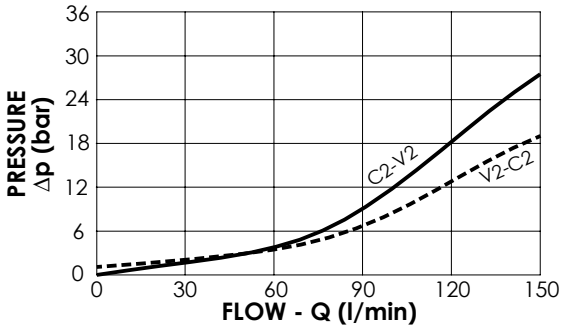

NOTES

Setting: at least 1.3 times the load induced pressure

ORDERING CODES

Quick code	Description	Pilot ratio	Main ports size	Standard setting (bar, Q=5 l/min)	Adjust. range (bar)	Pressure increase (bar/turn)
MB000214	**MBST-150-ABNV-04-G12-N350**	**4:1**	V1, V2: **G1/2"** M:**G1/4"** C1, C2: **Ø11.5**	**350**	**100-350**	**104**
MB000667	**MBST-150-ABNV-08-G12-N350**	**8:1**	V1, V2: **G1/2"** M:**G1/4"** C1, C2: **Ø11.5**	**350**	**100-350**	**101**

OVERCENTRE VALVE

MBST-150-ABNV

SINGLE ACTING
TWO FLANGED PORTS
FULLY COMPENSATED

ATLANTIC Fluid Tech

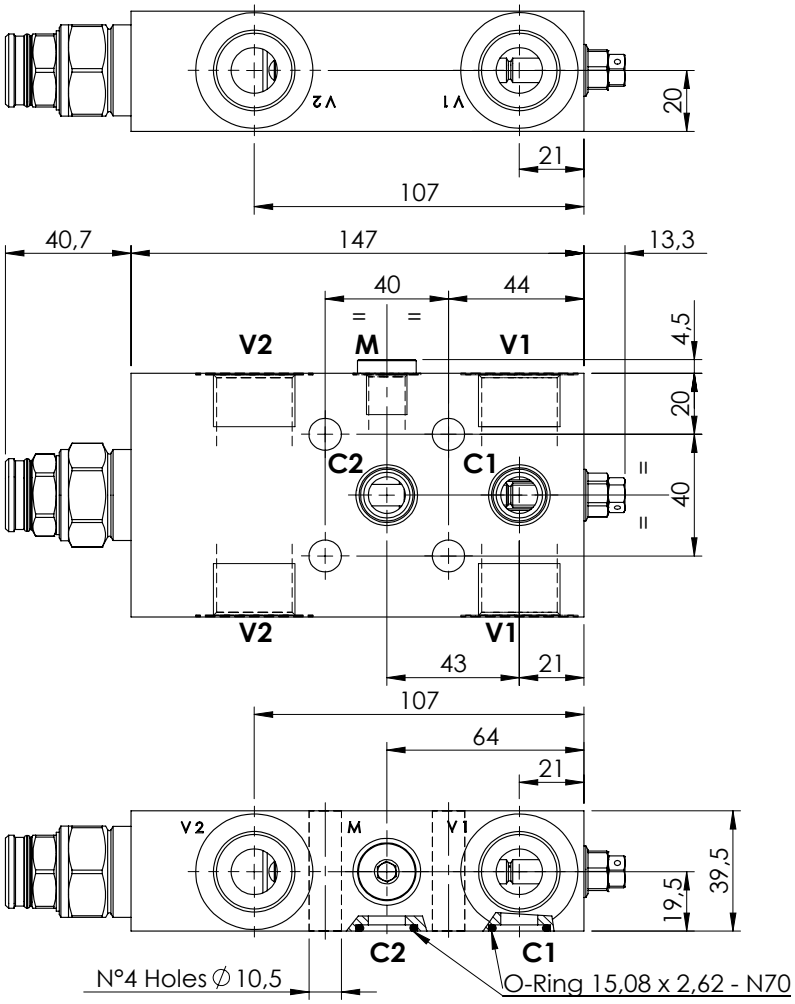

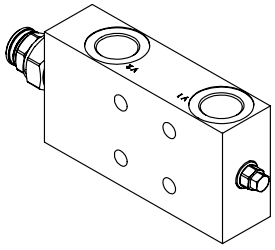

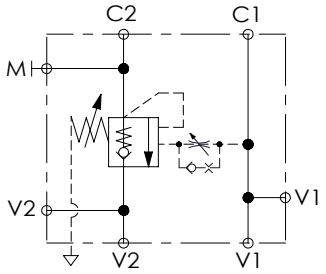

SPECIFICATIONS

Max. operating pressure:	**350 bar**
Rated flow:	**150 l/min**
Manifold:	**Steel**
Weight:	**3,12 kg**

SEALING CAP

Ordering code:

ST000012

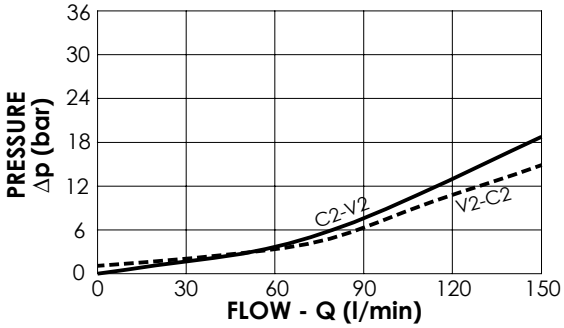

NOTES

Setting: at least 1.3 times the load induced pressure

ORDERING CODES

Quick code	Description	Pilot ratio	Main ports size	Standard setting (bar, Q=5 l/min)	Adjust. range (bar)	Pressure increase (bar/turn)
MB000561	**MBST-150-ABNV-04-G34-N350**	**4:1**	V1, V2: **G3/4"** M: **G 1/4"** C1, C2: **Ø12**	**350**	**100-350**	**104**

OVERCENTRE VALVE

MBDN-040-ALNP

DOUBLE ACTING

ATLANTIC Fluid Tech

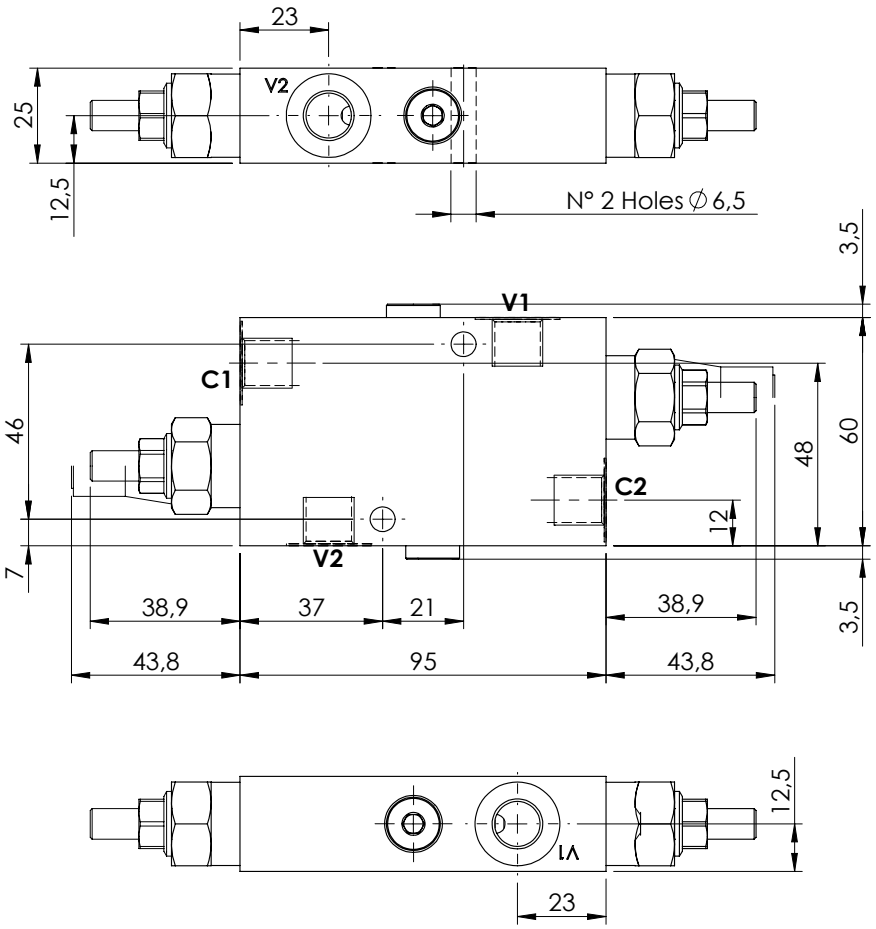

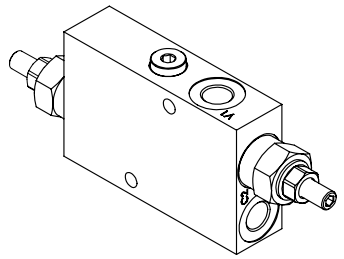

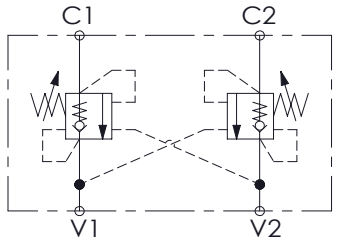

SPECIFICATIONS

Max. operating pressure:	**350 bar**
Rated flow:	**40 l/min**
Manifold:	**Steel**
Weight:	**1,11 kg**

SEALING CAP

Ordering code:

AT000020

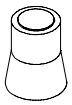

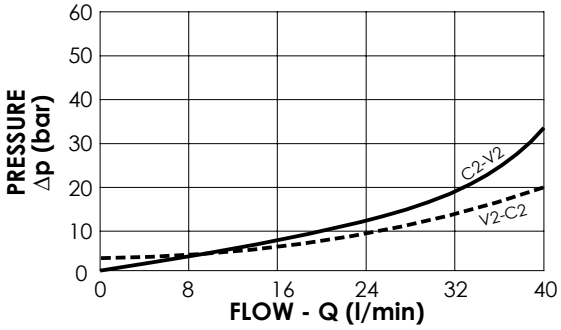

NOTES

Setting: at least 1.3 times the load induced pressure

ORDERING CODES

Quick code	Description	Pilot ratio	Main ports size	Standard setting (bar, Q=5 l/min)	Adjust. range (bar)	Pressure increase (bar/turn)
MB000219	**MBDN-040-ALNP-04-G14-N350**	**4,1:1**	V1, V2: **G1/4"** C1, C2: **G1/4"**	**350**	**100-350**	**184**

OVERCENTRE VALVE

MBDN-040-ALNR

DOUBLE ACTING

ATLANTIC Fluid Tech

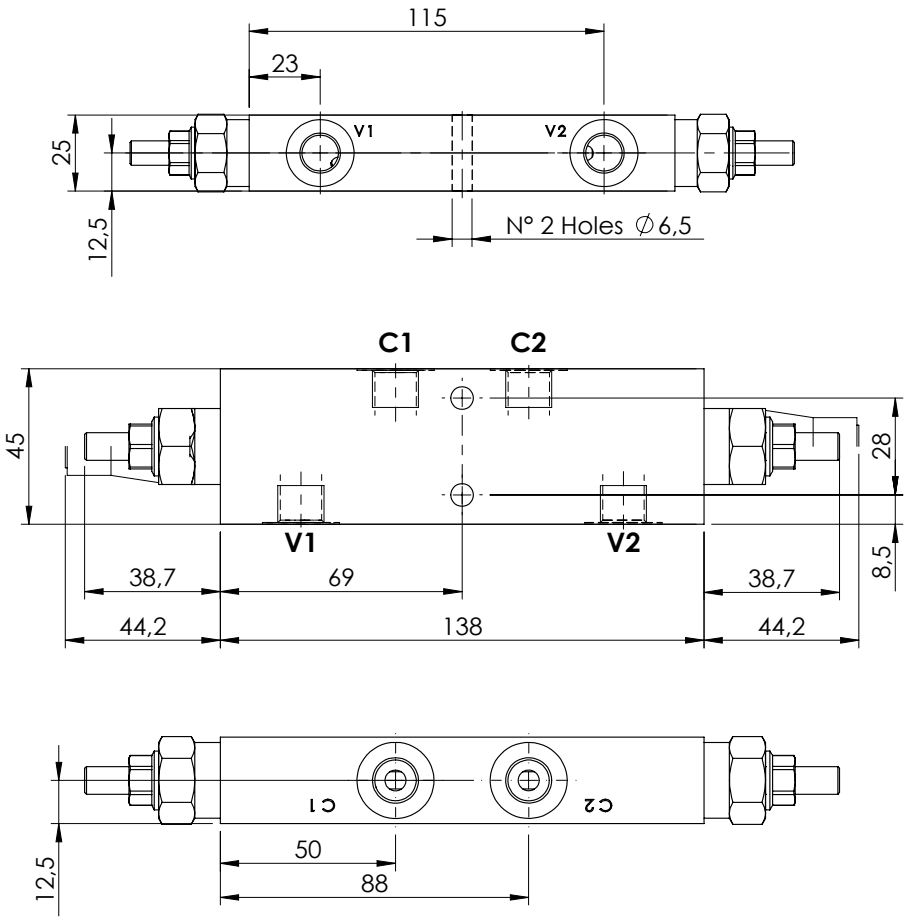

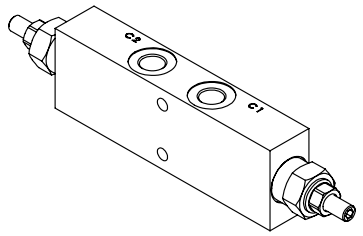

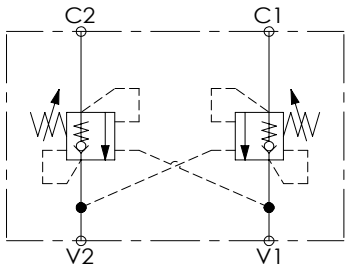

SPECIFICATIONS

Max. operating pressure:	350 bar
Rated flow:	40 l/min
Manifold:	Steel
Weight:	1,22 kg

SEALING CAP

Ordering code:

AT000020

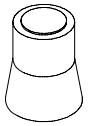

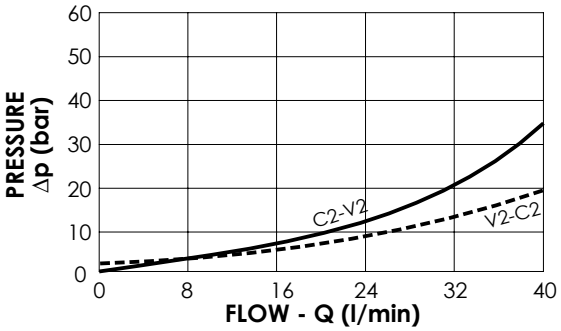

NOTES

Setting: at least 1.3 times the load induced pressure

ORDERING CODES

Quick code	Description	Pilot ratio	Main ports size	Standard setting (bar, Q=5 l/min)	Adjust. range (bar)	Pressure increase (bar/turn)
MB000072	**MBDN-040-ALNR-04-G14-N350**	**4,1:1**	V1, V2: **G1/4"** C1, C2: **G1/4"**	**350**	**100-350**	**184**
MB000873	**MBDN-040-ALNR-04-G14-N200**	**4,1:1**	V1, V2: **G1/4"** C1, C2: **G1/4"**	**200**	**60-210**	**83**
MB000381	**MBDN-040-ALNR-07-G14-N350**	**7,5:1**	V1, V2: **G1/4"** C1, C2: **G1/4"**	**350**	**100-350**	**138**

OVERCENTRE VALVE

MBDN-040-ZLNN

DOUBLE ACTING

ATLANTIC Fluid Tech

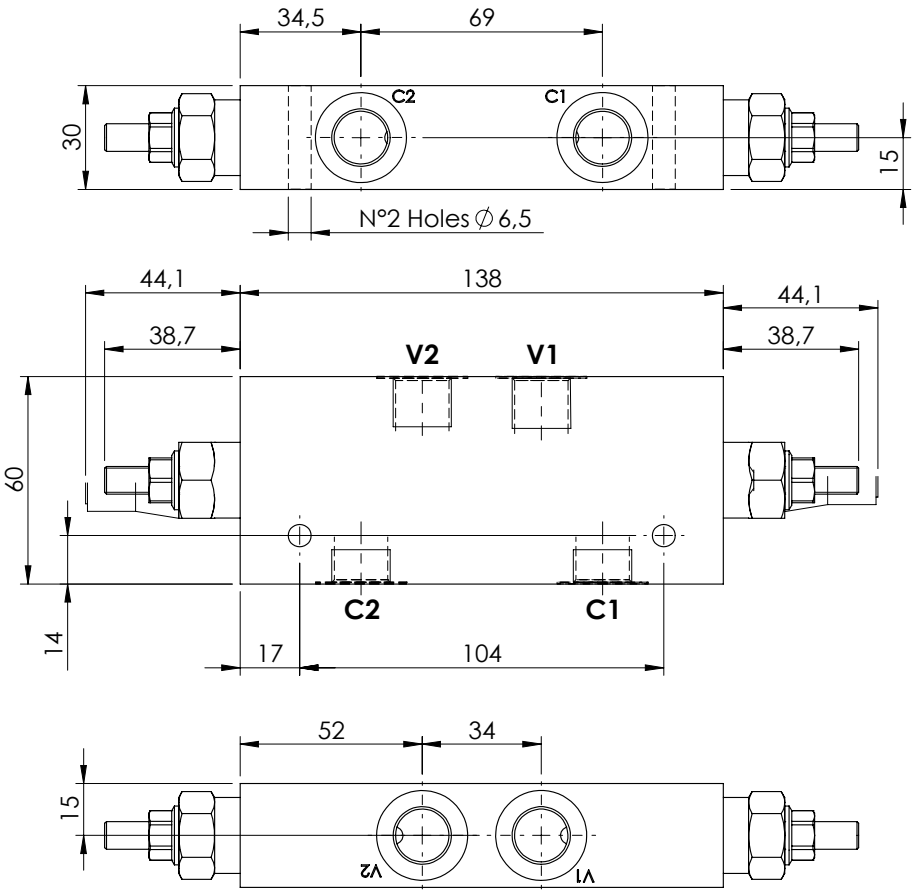

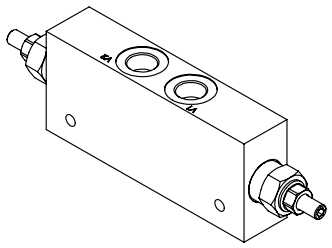

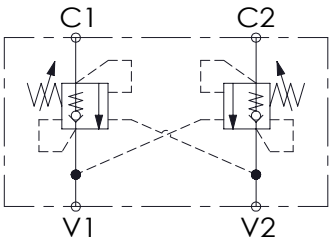

SPECIFICATIONS

Max. operating pressure:	350 bar
Rated flow:	40 l/min
Manifold:	Aluminium
Weight:	0,78 kg

SEALING CAP

Ordering code:

AT000020

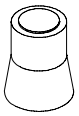

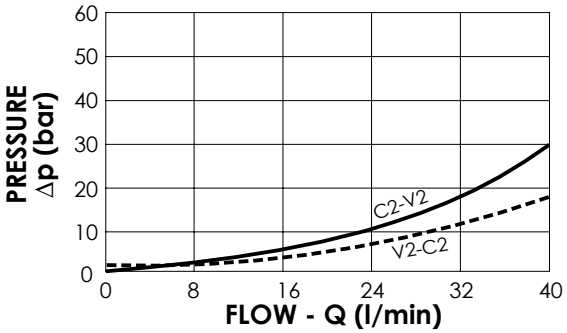

NOTES

Setting: at least 1.3 times the load induced pressure

ORDERING CODES

Quick code	Description	Pilot ratio	Main ports size	Standard setting (bar, Q=5 l/min)	Adjust. range (bar)	Pressure increase (bar/turn)
MB000310	**MBDN-040-ZLNN-04-G38-N350**	**4,1:1**	V1,V2: **G 3/8"** C1,C2: **G 3/8"**	**350**	**100-350**	**184**
MB000311	**MBDN-040-ZLNN-04-G38-N200**	**4,1:1**	V1,V2: **G 3/8"** C1,C2: **G 3/8"**	**200**	**60-210**	**83**
MB000312	**MBDN-040-ZLNN-04-G38-N100**	**4,1:1**	V1,V2: **G 3/8"** C1,C2: **G 3/8"**	**100**	**45-100**	**45**
MB000341	**MBDN-040-ZLNN-07-G38-N350**	**7,5:1**	V1,V2: **G 3/8"** C1,C2: **G 3/8"**	**350**	**100-350**	**138**
MB000409	**MBDN-040-ZLNN-07-G38-N200**	**7,5:1**	V1,V2: **G 3/8"** C1,C2: **G 3/8"**	**200**	**60-210**	**80**

OVERCENTRE VALVE

MBDN-040-AANR

DOUBLE ACTING ONE FLANGED PORT

ATLANTIC Fluid Tech

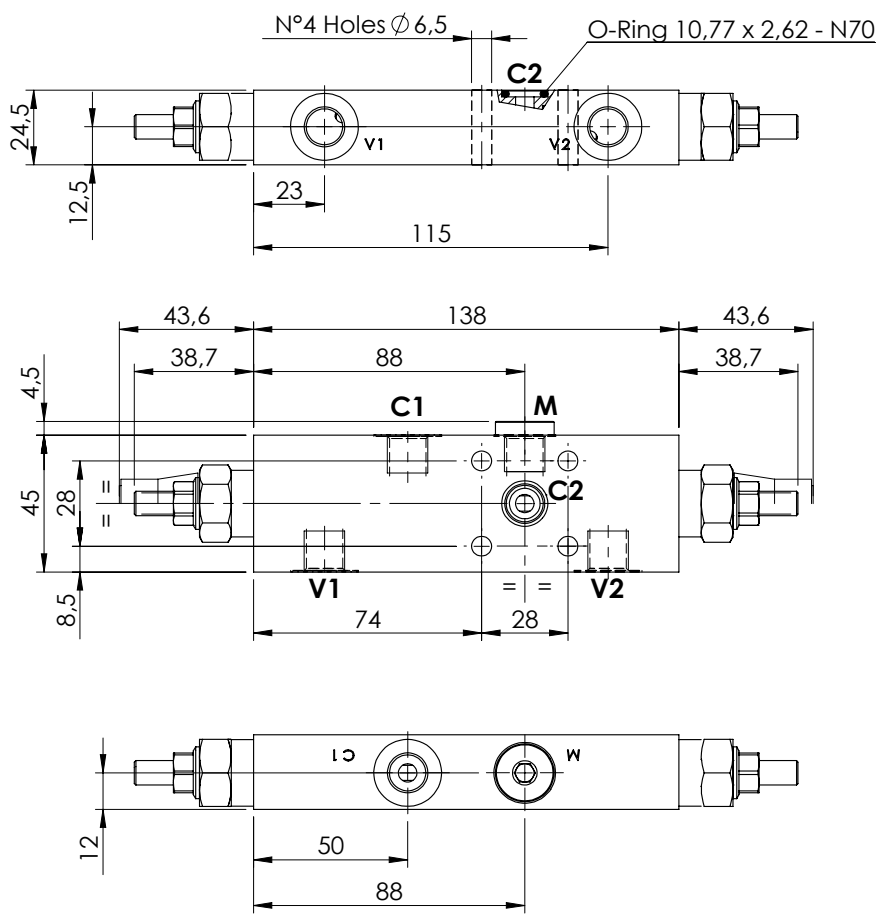

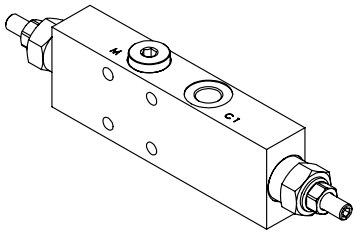

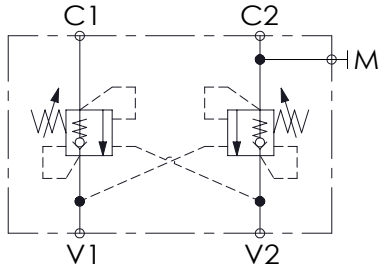

SPECIFICATIONS

Max. operating pressure:	**350 bar**
Rated flow:	**40 l/min**
Manifold:	**Steel**
Weight:	**1,2 kg**

SEALING CAP

Ordering code:

AT000020

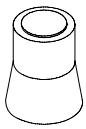

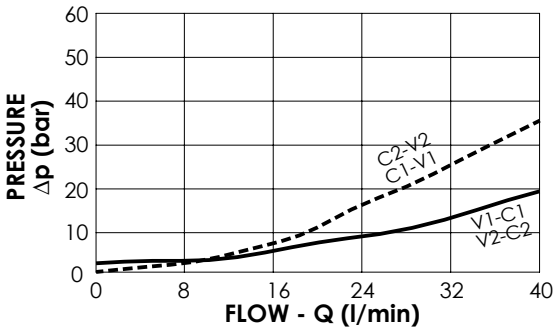

NOTES

Setting: at least 1.3 times the load induced pressure

ORDERING CODES

Quick code	Description	Pilot ratio	Main ports size	Standard setting (bar, Q=5 l/min)	Adjust. range (bar)	Pressure increase (bar/turn)
MB000106	**MBDN-040-AANR-04-G14-N350**	**4,1:1**	V1, V2: **G1/4"** C1: **G1/4"** C2:**Ø6**	**350**	**100-350**	**184**
MB000583	**MBDN-040-AANR-07-G14-N350**	**7,5:1**	V1, V2: **G1/4"** C1: **G1/4"** C2:**Ø6**	**350**	**100-350**	**138**

OVERCENTRE VALVE

MBDN-040-ABNP

DOUBLE ACTING TWO FLANGED PORTS

ATLANTIC Fluid Tech

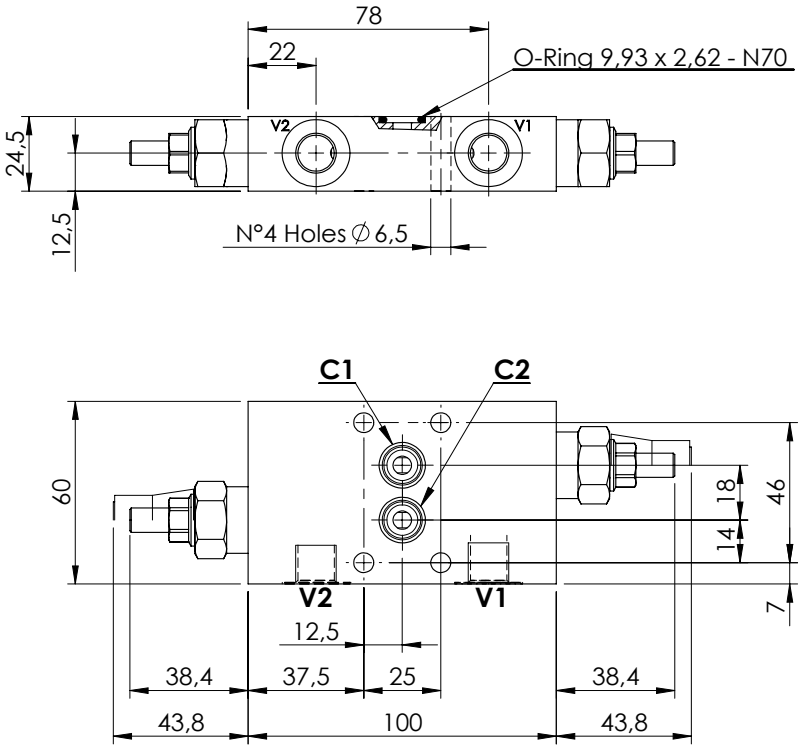

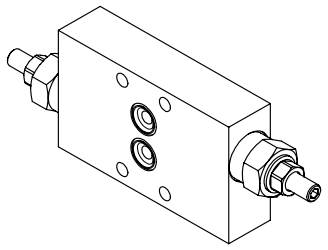

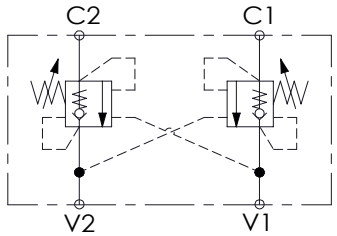

SPECIFICATIONS

Max. operating pressure:	**350 bar**
Rated flow:	**40 l/min**
Manifold:	**Steel**
Weight:	**1,15 kg**

SEALING CAP

Ordering code:

AT000020

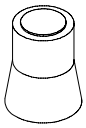

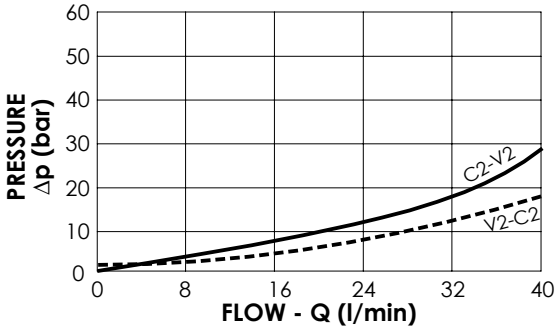

NOTES

Setting: at least 1.3 times the load induced pressure

ORDERING CODES

Quick code	Description	Pilot ratio	Main ports size	Standard setting (bar, Q=5 l/min)	Adjust. range (bar)	Pressure increase (bar/turn)
MB000334	**MBDN-040-ABNP-04-G14-N350**	**4,1:1**	V1, V2: **G1/4"** C1, C2: **Ø6**	**350**	**100-350**	**184**

OVERCENTRE VALVE

MBDN-040-ABNR

DOUBLE ACTING TWO FLANGED PORTS

ATLANTIC Fluid Tech

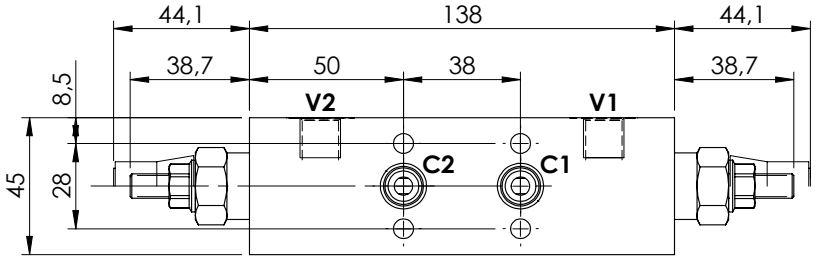

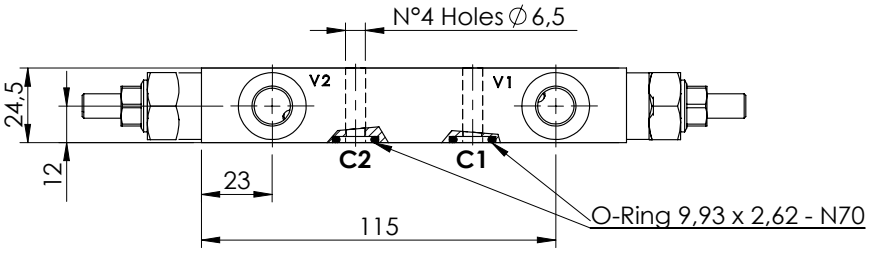

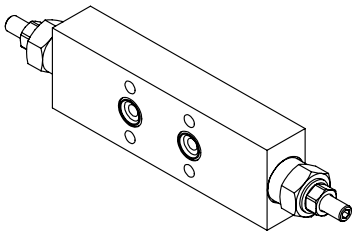

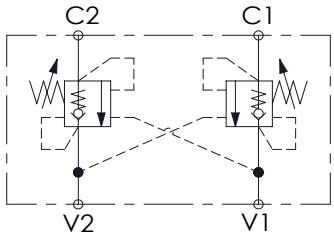

SPECIFICATIONS

Max. operating pressure:	**350 bar**
Rated flow:	**40 l/min**
Manifold:	**Steel**
Weight:	**1,21 kg**

SEALING CAP

Ordering code:

AT000020

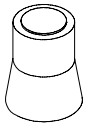

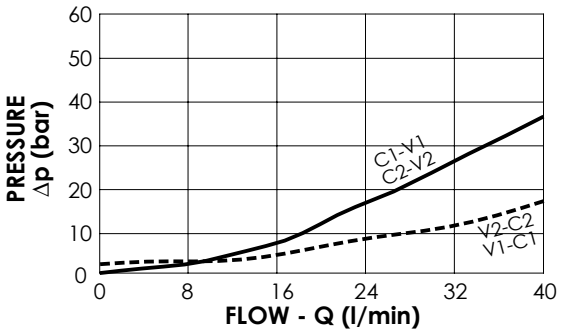

NOTES

Setting: at least 1.3 times the load induced pressure

ORDERING CODES

Quick code	Description	Pilot ratio	Main ports size	Standard setting (bar, Q=5 l/min)	Adjust. range (bar)	Pressure increase (bar/turn)
MB000110	**MBDN-040-ABNR-04-G14-N350**	**4,1:1**	V1, V2: **G1/4"** C1, C2: **Ø6**	**350**	**100-350**	**184**
MB000331	**MBDN-040-ABNR-07-G14-N350**	**7,5:1**	V1, V2: **G1/4"** C1, C2: **Ø6**	**350**	**100-350**	**138**
MB000589	**MBDN-040-ABNR-11-G14-N350**	**11,5:1**	V1, V2: **G1/4"** C1, C2: **Ø6**	**350**	**100-350**	**228**

OVERCENTRE VALVE

MBDN-040-ABNV

DOUBLE ACTING TWO FLANGED PORTS

ATLANTIC Fluid Tech

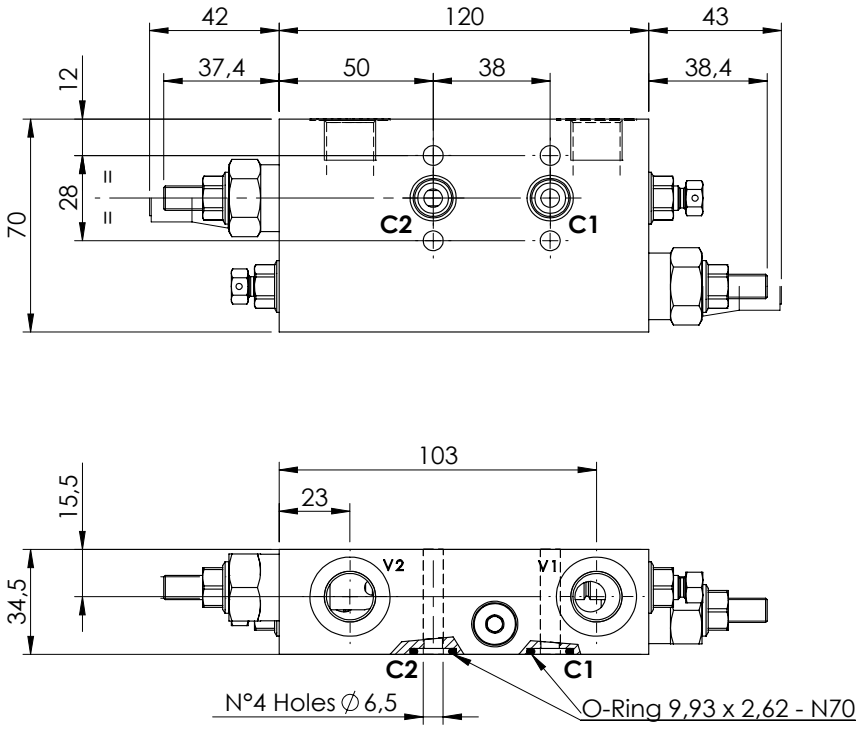

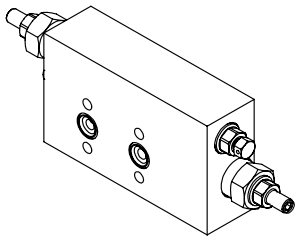

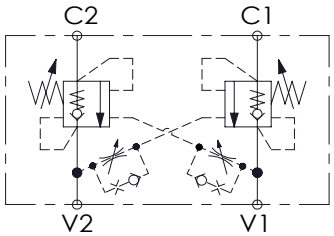

SPECIFICATIONS

Max. operating pressure:	**350 bar**
Rated flow:	**40 l/min**
Manifold:	**Steel**
Weight:	**2,19 kg**

SEALING CAP

Ordering code:

AT000020

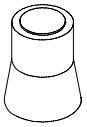

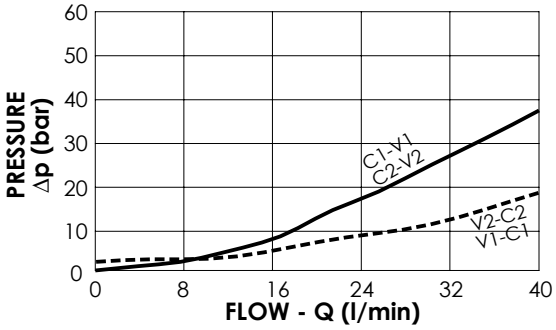

NOTES

Setting: at least 1.3 times the load induced pressure

ORDERING CODES

Quick code	Description	Pilot ratio	Main ports size	Standard setting (bar, Q=5 l/min)	Adjust. range (bar)	Pressure increase (bar/turn)
MB000590	**MBDN-040-ABNV-04-G38-N350**	**4,1:1**	V1, V2: **G3/8"** C1, C2: **Ø6**	**350**	**100-350**	**184**

OVERCENTRE VALVE

MBDN-040-LBNN

DOUBLE ACTING TWO FLANGED PORTS

ATLANTIC Fluid Tech

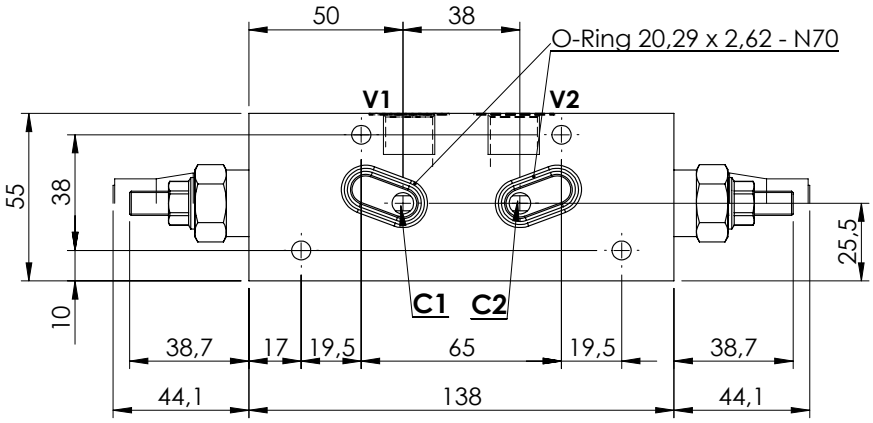

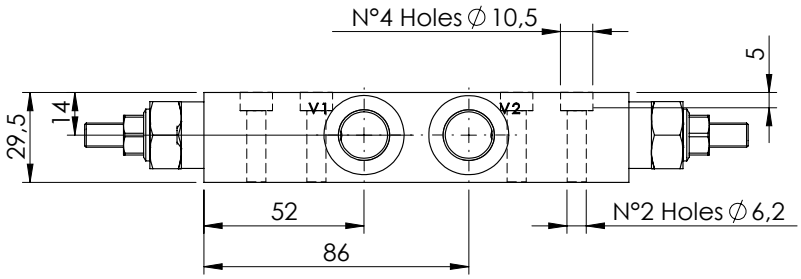

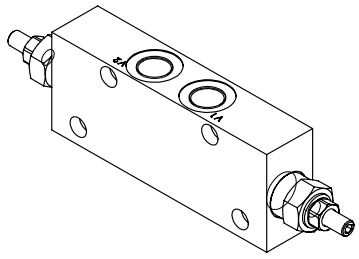

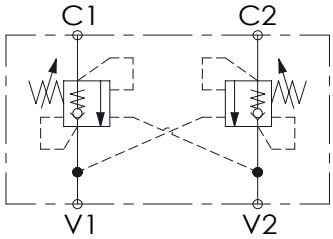

SPECIFICATIONS

Max. operating pressure:	**350 bar**
Rated flow:	**40 l/min**
Manifold:	**Aluminium**
Weight:	**0,72 kg**

SEALING CAP

Ordering code:

AT000020

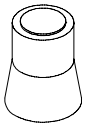

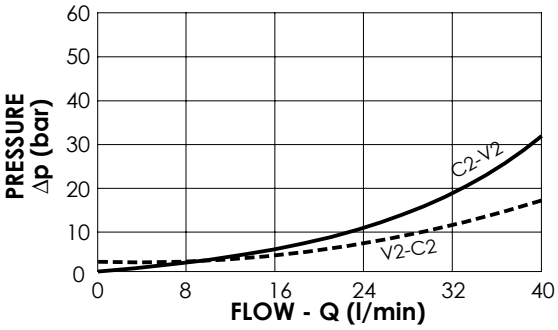

NOTES

Setting: at least 1.3 times the load induced pressure

ORDERING CODES

Quick code	Description	Pilot ratio	Main ports size	Standard setting (bar, Q=5 l/min)	Adjust. range (bar)	Pressure increase (bar/turn)
MB000410	**MBDN-040-ZBNN-04-G38-N350**	**4,1:1**	V1,V2: **G3/8"** C1,C2: ∅ **7**	**350**	**100-350**	**184**
MB000411	**MBDN-040-LBNN-04-G38-N200**	**4,1:1**	V1,V2: **G3/8"** C1,C2: ∅ **7**	**200**	**60-210**	**83**
MB000412	**MBDN-040-LBNN-07-G38-N350**	**7,5:1**	V1,V2: **G3/8"** C1,C2: ∅ **7**	**350**	**100-350**	**138**
MB000413	**MBDN-040-LBNN-07-G38-N200**	**7,5:1**	V1,V2: **G3/8"** C1,C2: ∅ **7**	**200**	**60-210**	**80**

OVERCENTRE VALVE

MBDN-040-ZDNA

DOUBLE ACTING ALL FLANGED PORTS

ATLANTIC Fluid Tech

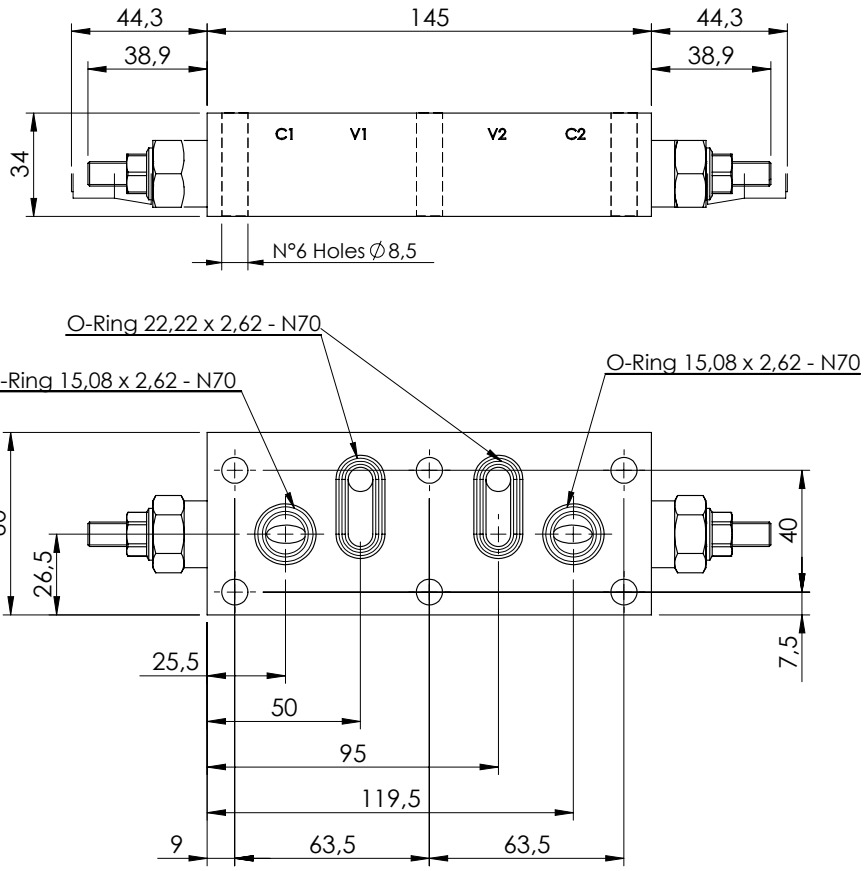

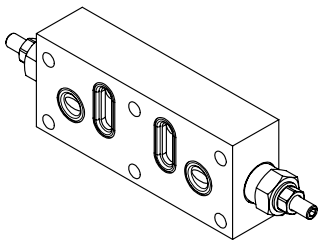

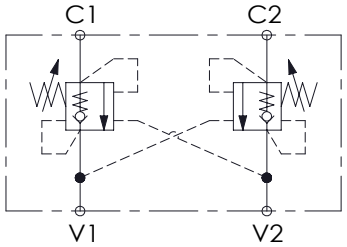

SPECIFICATIONS

Max. operating pressure:	**350 bar**
Rated flow:	**40 l/min**
Weight:	**0.9 kg**

SEALING CAP

Ordering code:

AT000020

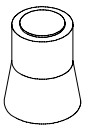

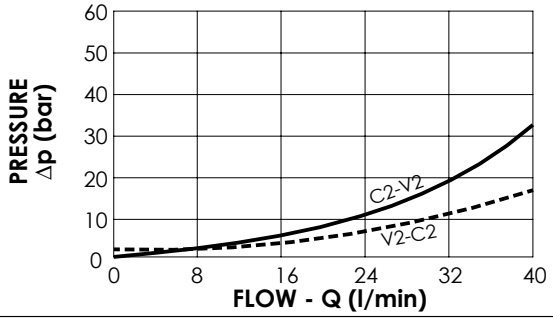

NOTES

Setting: at least 1.3 times the load induced pressure

ORDERING CODES

Quick code	Description	Pilot ratio	Manifold material	Main ports size	Standard setting (bar,Q=5 l/min)	Adjust. range (bar)	Pressure increase (bar/turn)
MB000523	**MBDN-040-ZDNA-04-PTF-N350**	**4,1:1**	**Aluminium**	V1,V2: ∅**8** C1,C2: ∅**8**	**350**	**100-350**	**184**
MB000524	**MBDN-040-ZDNA-04-PTF-N200**	**4,1:1**	**Aluminium**	V1,V2: ∅**8** C1,C2: ∅**8**	**200**	**60-210**	**83**

OVERCENTRE VALVE

MBDN-060-ALNR

DOUBLE ACTING

ATLANTIC Fluid Tech

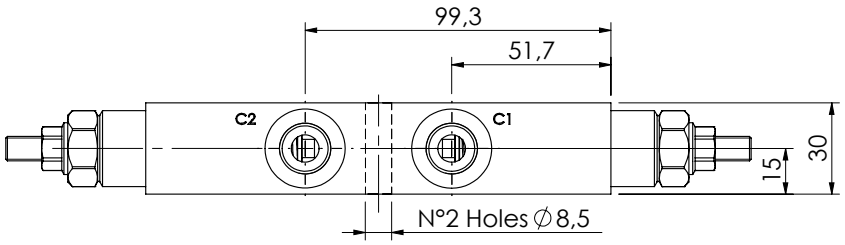

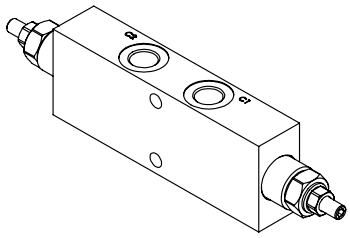

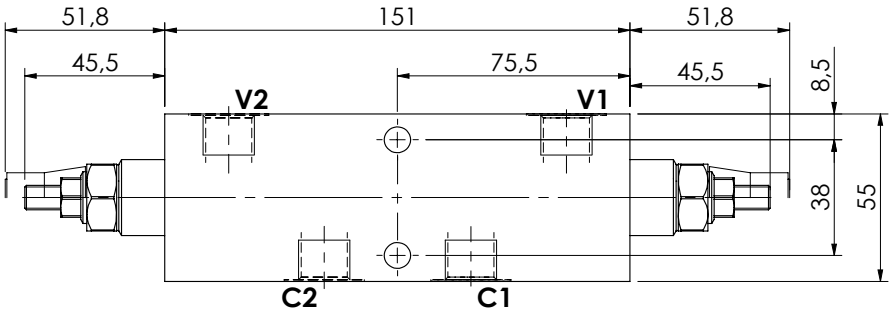

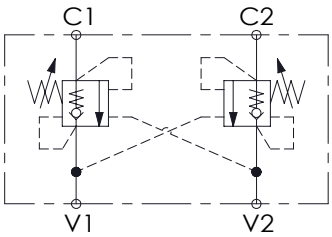

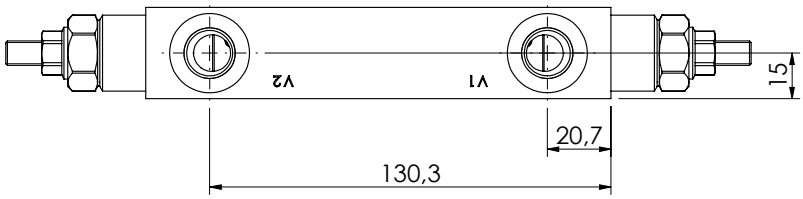

SPECIFICATIONS

Max. operating pressure:	**350 bar**
Rated flow:	**60 l/min**
Manifold:	**Steel**
Weight:	**1,92 kg**

SEALING CAP

Ordering code:
AT000020

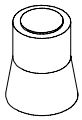

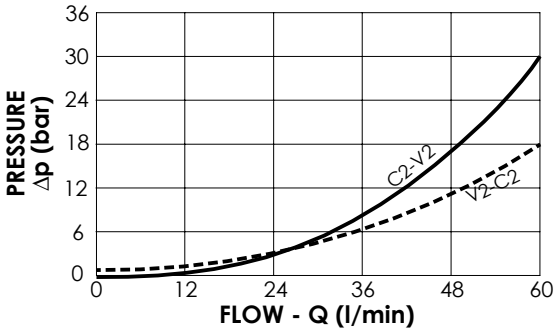

NOTES

Setting: at least 1.3 times the load induced pressure

ORDERING CODES

Quick code	Description	Pilot ratio	Main ports size	Standard setting (bar, Q=5 l/min)	Adjust. range (bar)	Pressure increase (bar/turn)
MB000006	**MBDN-060-ALNR-04-G38-N350**	**4,2:1**	V1, V2: **G3/8"** C1, C2: **G3/8"**	**350**	**100-350**	**138**
MB000084	**MBDN-060-ALNR-04-G38-N200**	**4,2:1**	V1, V2: **G3/8"** C1, C2: **G3/8"**	**200**	**60-210**	**62**
MB000186	**MBDN-060-ALNR-11-G38-N250**	**11:1**	V1, V2: **G3/8"** C1, C2: **G3/8"**	**250**	**60-250**	**69**

OVERCENTRE VALVE

MBDN-060-ALNR

DOUBLE ACTING

ATLANTIC Fluid Tech

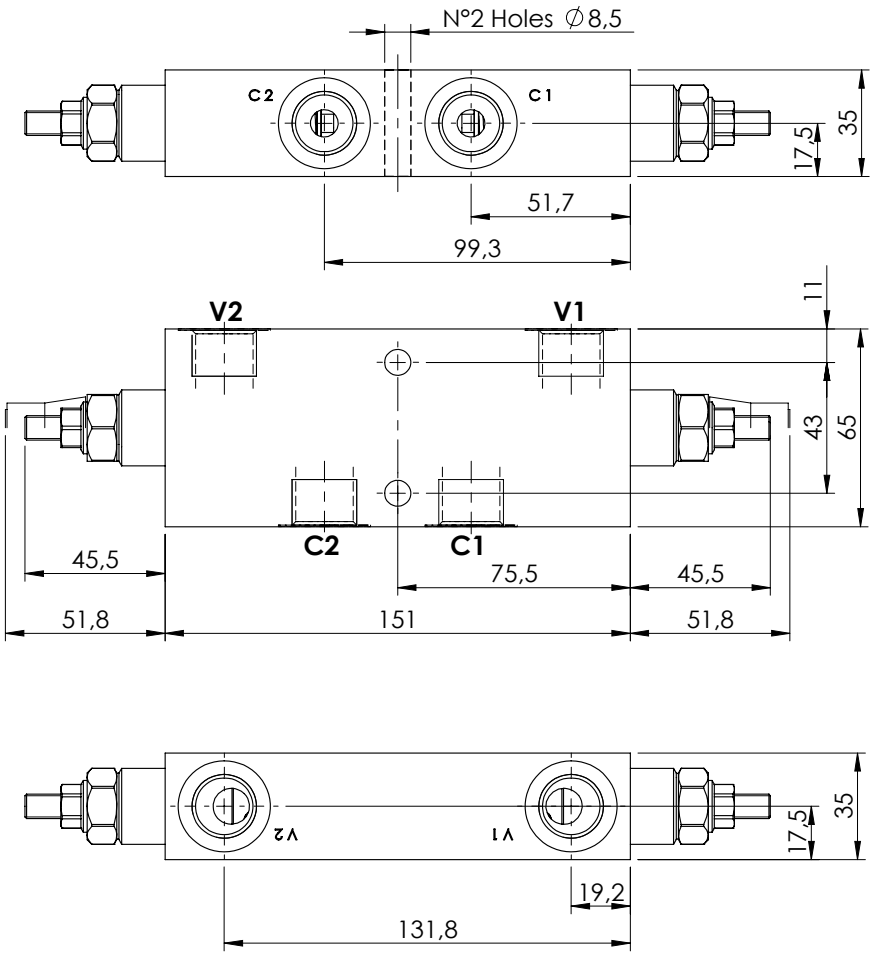

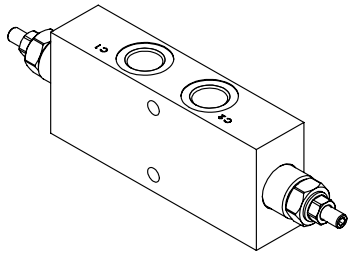

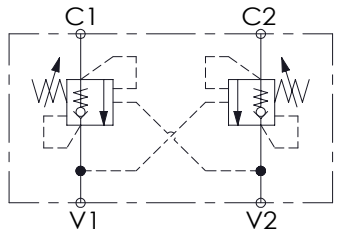

SPECIFICATIONS

Max. operating pressure:	**350 bar**
Rated flow:	**60 l/min**
Manifold:	**Steel**
Weight:	**2,56 kg**

SEALING CAP

Ordering code:

AT000020

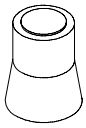

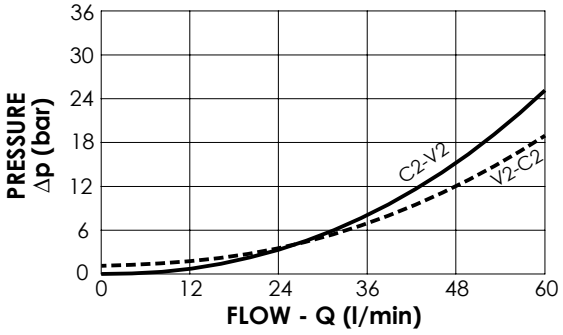

NOTES

Setting: at least 1.3 times the load induced pressure

ORDERING CODES

Quick code	Description	Pilot ratio	Main ports size	Standard setting (bar, Q=5 l/min)	Adjust. range (bar)	Pressure increase (bar/turn)
MB000009	**MBDN-060-ALNR-04-G12-N350**	**4,2:1**	V1, V2: **G1/2"** C1, C2: **G1/2"**	**350**	**100-350**	**138**
MB000263	**MBDN-060-ALNR-04-G12-N200**	**4,2:1**	V1, V2: **G1/2"** C1, C2: **G1/2"**	**200**	**60-210**	**62**
MB000391	**MBDN-060-ALNR-11-G12-N350**	**11:1**	V1, V2: **G1/2"** C1, C2: **G1/2"**	**350**	**60-350**	**69**

OVERCENTRE VALVE

MBDN-060-ZLDE

DOUBLE ACTING

ATLANTIC Fluid Tech

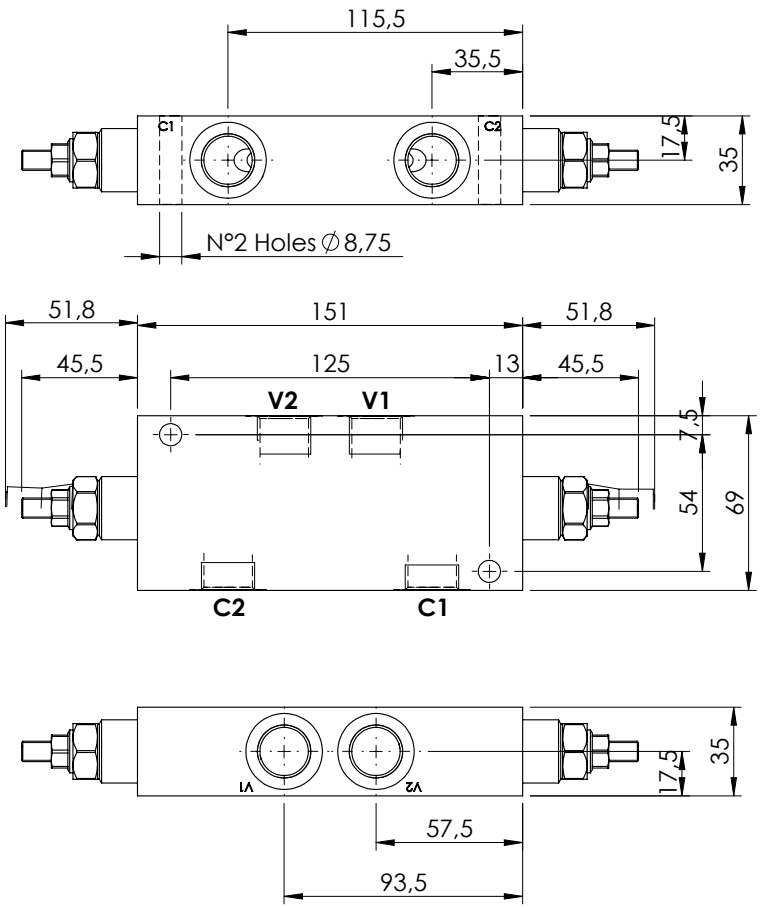

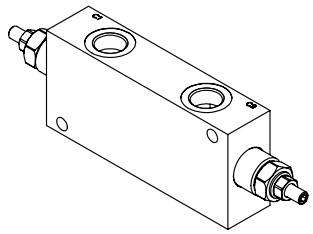

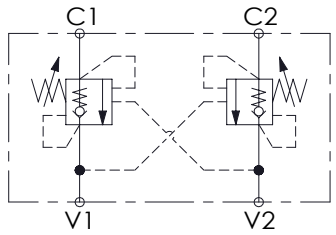

SPECIFICATIONS

Max. operating pressure:	**350 bar**
Rated flow:	**60 l/min**
Weight:	**Aluminium 1.1 kg; Steel 2.7 kg**

SEALING CAP

Ordering code:

AT000020

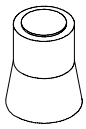

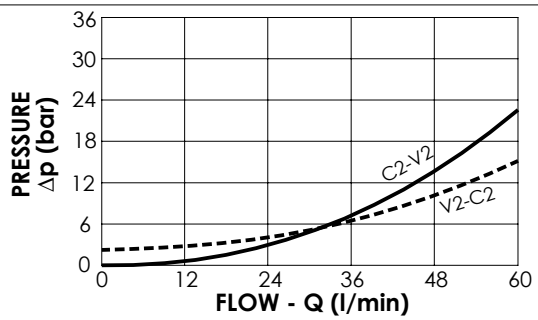

NOTES

Setting: at least 1.3 times the load induced pressure

ORDERING CODES

Quick code	Description	Pilot ratio	Manifold material	Main ports size	Standard setting (bar,Q=5 l/min)	Adjust. range (bar)	Pressure increase (bar/turn)
MB000321	**MBDN-060-ZLDE-04-G12-N350**	**4.2:1**	**Aluminium**	V1, V2: **G1/2"** C1, C2: **G1/2"**	**350**	**100-350**	**138**
MB000443	**MBDN-060-ZLDE-04-G12-N200**	**4.2:1**	**Aluminium**	V1, V2: **G1/2"** C1, C2: **G1/2"**	**200**	**60-210**	**62**
MB000444	**MBDN-060-ALDE-04-G12-N350**	**4.2:1**	**Steel**	V1, V2: **G1/2"** C1, C2: **G1/2"**	**350**	**100-350**	**138**
MB000445	**MBDN-060-ALDE-04-G12-N200**	**4.2:1**	**Steel**	V1, V2: **G1/2"** C1, C2: **G1/2"**	**200**	**60-210**	**62**
MB000320	**MBDN-060-ZLDE-07-G12-N350**	**7:1**	**Aluminium**	V1, V2: **G1/2"** C1, C2: **G1/2"**	**350**	**100-350**	**106**
MB000446	**MBDN-060-ZLDE-07-G12-N200**	**7:1**	**Aluminium**	V1, V2: **G1/2"** C1, C2: **G1/2"**	**200**	**60-210**	**46**
MB000447	**MBDN-060-ALDE-07-G12-N350**	**7:1**	**Steel**	V1, V2: **G1/2"** C1, C2: **G1/2"**	**350**	**100-350**	**106**
MB000448	**MBDN-060-ALDE-07-G12-N200**	**7:1**	**Steel**	V1, V2: **G1/2"** C1, C2: **G1/2"**	**200**	**60-210**	**46**

OVERCENTRE VALVE

MBDN-060-AANR

DOUBLE ACTING ONE FLANGED PORT

ATLANTIC Fluid Tech

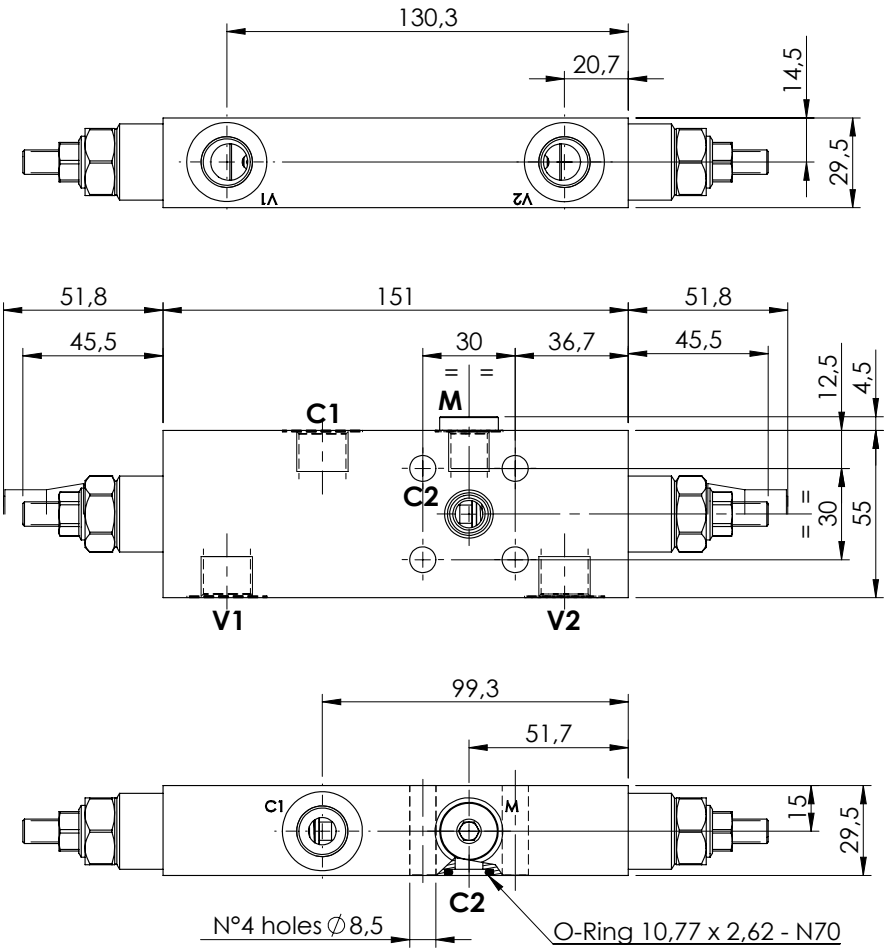

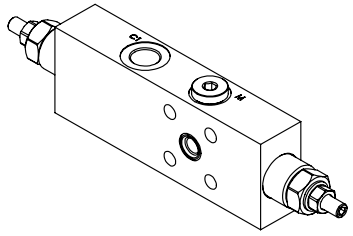

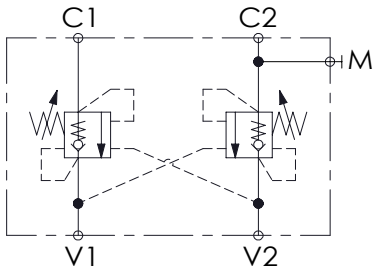

SPECIFICATIONS

Max. operating pressure:	350 bar
Rated flow:	60 l/min
Manifold:	Steel
Weight:	1,88 kg

SEALING CAP

Ordering code:

AT000020

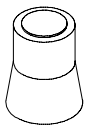

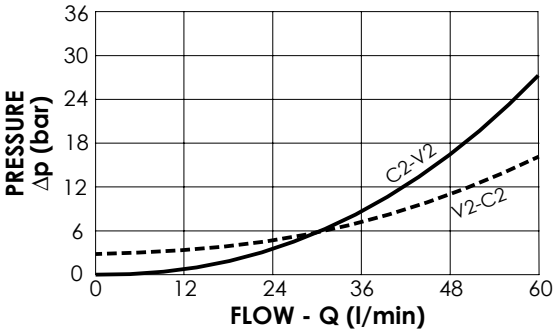

NOTES

Setting: at least 1.3 times the load induced pressure

ORDERING CODES

Quick code	Description	Pilot ratio	Main ports size	Standard setting (bar, Q=5 l/min)	Adjust. range (bar)	Pressure increase (bar/turn)
MB000008	**MBDN-060-AANR-04-G38-N350**	**4,2:1**	V1, V2,C1: **G3/8"** C2: **Ø9** M:**G1/4"**	**350**	**100-350**	**138**

OVERCENTRE VALVE

MBDN-060-ABNR

DOUBLE ACTING TWO FLANGED PORTS

ATLANTIC Fluid Tech

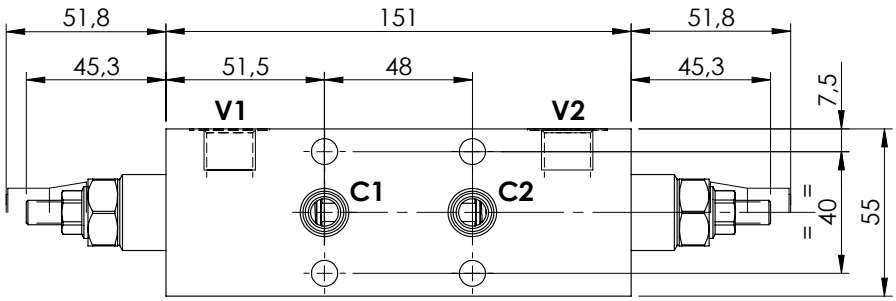

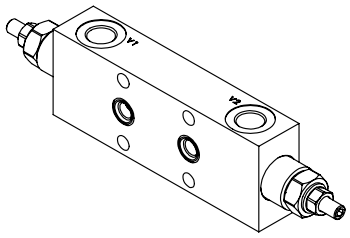

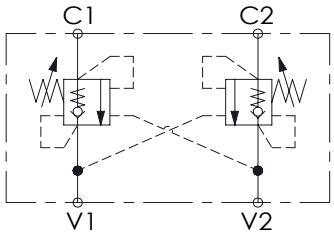

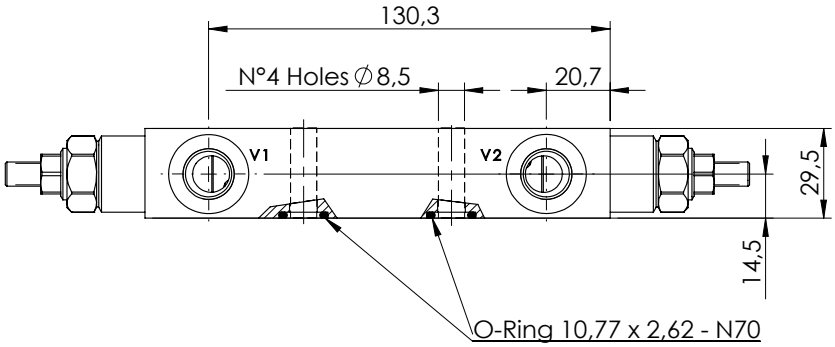

SPECIFICATIONS

Max. operating pressure:	**350 bar**
Rated flow:	**60 l/min**
Manifold:	**Steel**
Weight:	**1,89 kg**

SEALING CAP

Ordering code:

AT000020

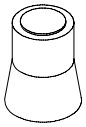

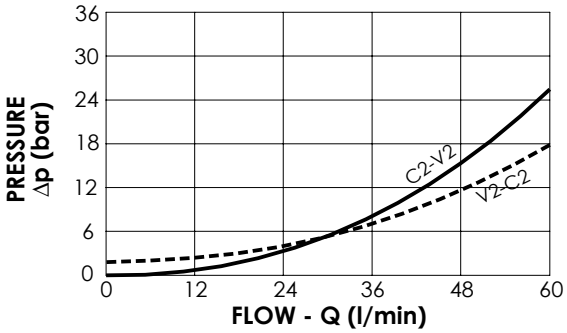

NOTES

Setting: at least 1.3 times the load induced pressure

ORDERING CODES

Quick code	Description	Pilot ratio	Main ports size	Standard setting (bar, Q=5 l/min)	Adjust. range (bar)	Pressure increase (bar/turn)
MB000235	**MBDN-060-ABNR-11-G38-N250**	**11:1**	V1, V2: **G3/8"** C1, C2: ∅**9**	**200**	**60-250**	**69**
MB000087	**MBDN-060-ABNR-04-G38-N350**	**4,2:1**	V1, V2: **G3/8"** C1, C2: ∅**9**	**350**	**100-350**	**138**
MB000178	**MBDN-060-ABNR-04-G38-N200**	**4,2:1**	V1, V2: **G3/8"** C1, C2: ∅**9**	**200**	**60-210**	**62**
MB000826	**MBDN-060-ABNR-07-G38-N350**	**7:1**	V1, V2: **G3/8"** C1, C2: ∅**9**	**350**	**100-350**	**106**

OVERCENTRE VALVE

MBDN-060-ABNR

DOUBLE ACTING, TWO FLANGED PORTS

ATLANTIC Fluid Tech

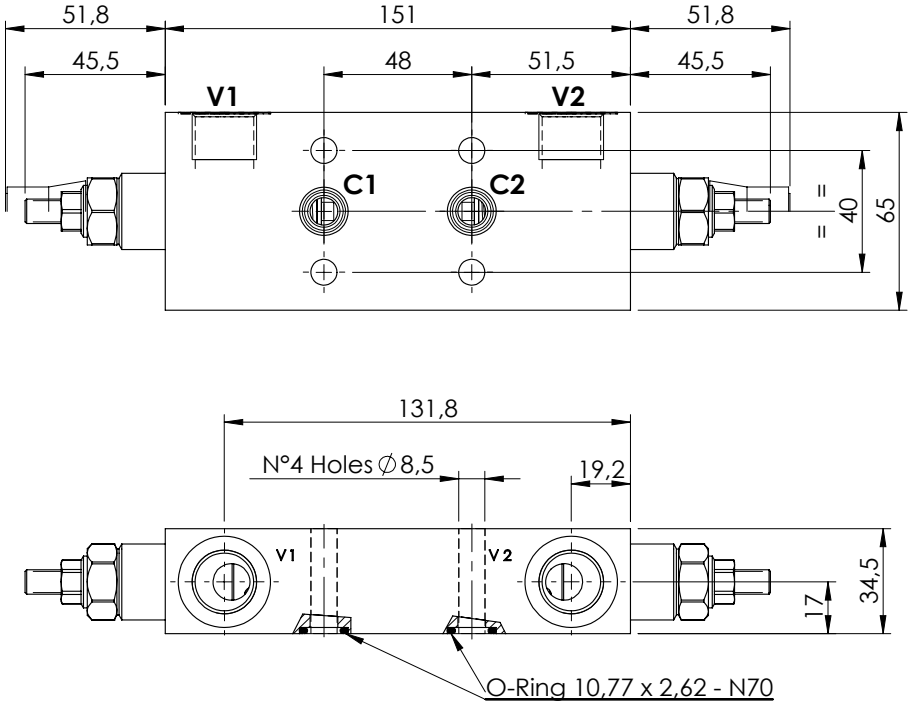

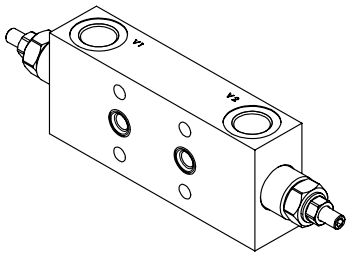

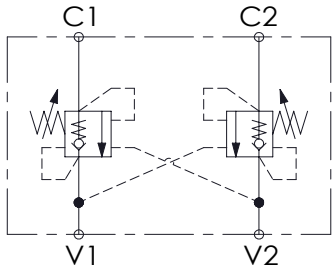

SPECIFICATIONS

Max operating pressure:	**420 bar**
Rated flow:	**60 l/min**
Manifold :	**Steel**
Weight:	**2,57 kg**

SEALING CAP

Ordering code:

AT000020

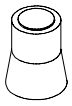

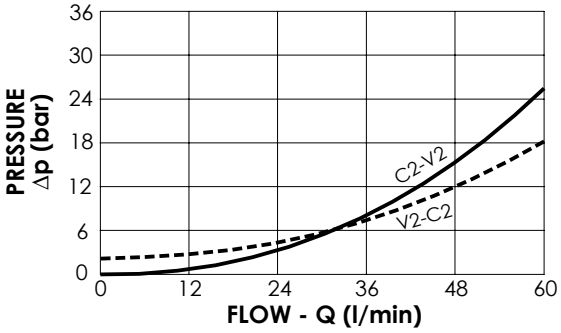

NOTES

Setting: at least 1.3 times the load induced pressure

ORDERING CODES

Quick code	Description	Pilot ratio	Main ports size	Standard setting (bar, Q=5 l/min)	Pressure range (bar)	Pressure increase (bar/turn)
MB000016	**MBDN-060-ABNR-04-G12-N350**	**4,2:1**	V1, V2: **G1/2"** C1, C2: ∅**9**	**350**	**100-350**	**138**
MB000228	**MBDN-060-ABNR-04-G12-N200**	**4,2:1**	V1, V2: **G1/2"** C1, C2: ∅**9**	**200**	**60-210**	**62**
MB000229	**MBDN-060-ABNR-11-G12-N200**	**11:1**	V1, V2: **G1/2"** C1, C2: ∅**9**	**200**	**60-250**	**69**
MB000380	**MBDN-060-ABNR-11-G12-N350**	**11:1**	V1, V2: **G1/2"** C1, C2: ∅**9**	**350**	**150-420**	**161**

OVERCENTRE VALVE

MBDN-060-ZDNA

DOUBLE ACTING ALL FLANGED PORTS

ATLANTIC Fluid Tech

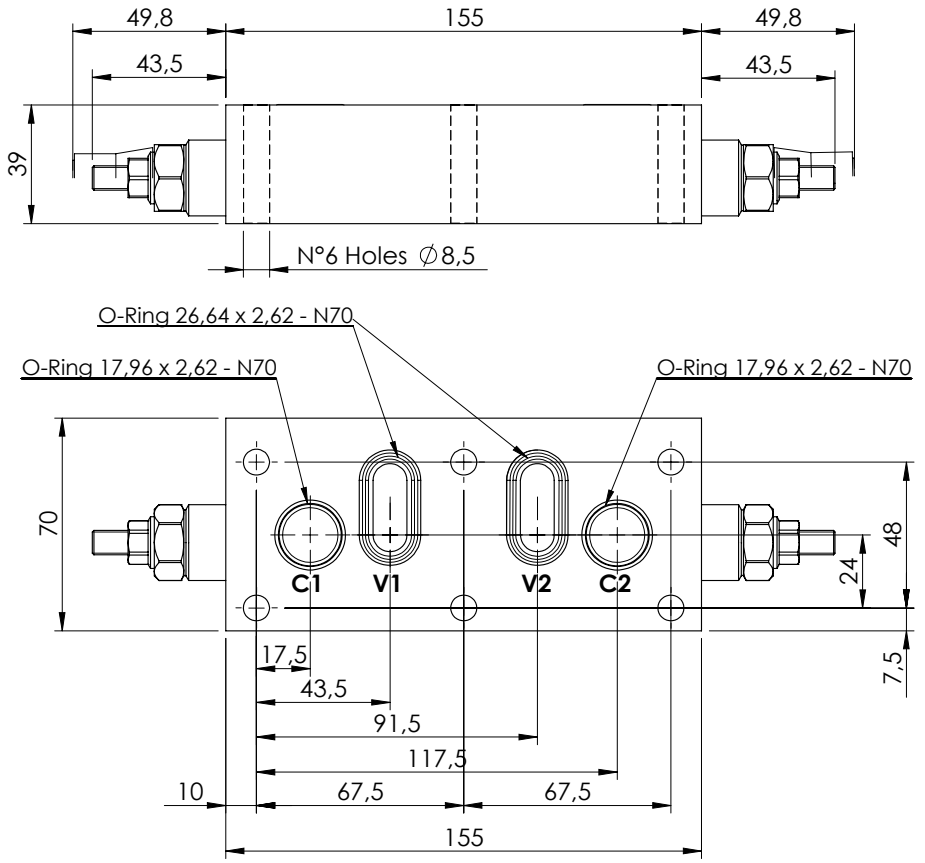

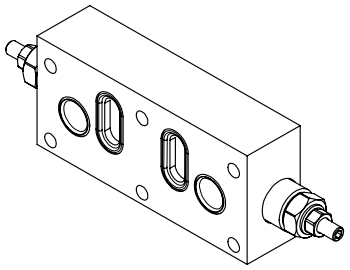

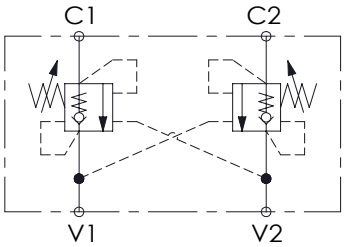

SPECIFICATIONS

Max. operating pressure:	350 bar
Rated flow:	60 l/min
Weight:	Aluminium 1.3kg, Steel 3.1kg

SEALING CAP

Ordering code:

AT000020

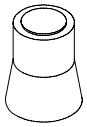

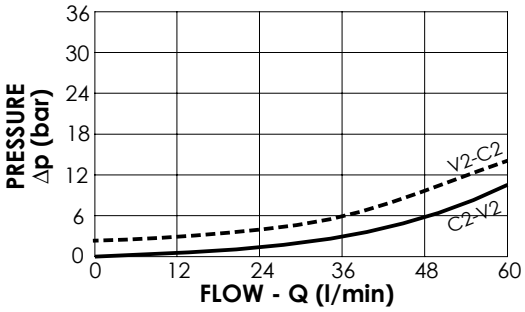

NOTES

Setting: at least 1.3 times the load induced pressure

ORDERING CODES

Quick code	Description	Pilot ratio	Manifold material	Main ports size	Standard setting (bar,Q=5 l/min)	Adjust. range (bar)	Pressure increase (bar/turn)
MB000404	MBDN-060-ZDNA-04-PTF-N350	4,2:1	Aluminium	V1,V2: ∅10 C1,C2: ∅10	350	100-350	138
MB000405	MBDN-060-ZDNA-04-PTF-N200	4,2:1	Aluminium	V1,V2: ∅10 C1,C2: ∅10	200	60-210	62
MB000424	MBDN-060-ADNA-04-PTF-N350	4,2:1	Steel	V1,V2: ∅10 C1,C2: ∅10	350	100-350	138
MB000442	MBDN-060-ADNA-04-PTF-N200	4,2:1	Steel	V1,V2: ∅10 C1,C2: ∅10	200	60-210	62
MB000399	MBDN-060-ZDNA-07-PTF-N350	7:1	Aluminium	V1,V2: ∅10 C1,C2: ∅10	350	100-350	106
MB000403	MBDN-060-ZDNA-07-PTF-N200	7:1	Aluminium	V1,V2: ∅10 C1,C2: ∅10	200	60-210	46
MB000441	MBDN-060-ADNA-07-PTF-N350	7:1	Steel	V1,V2: ∅10 C1,C2: ∅10	350	100-350	106
MB000440	MBDN-060-ADNA-07-PTF-N200	7:1	Steel	V1,V2: ∅10 C1,C2: ∅10	200	60-210	46

OVERCENTRE VALVE

MBDN-100-ALDE

DOUBLE ACTING

ATLANTIC Fluid Tech

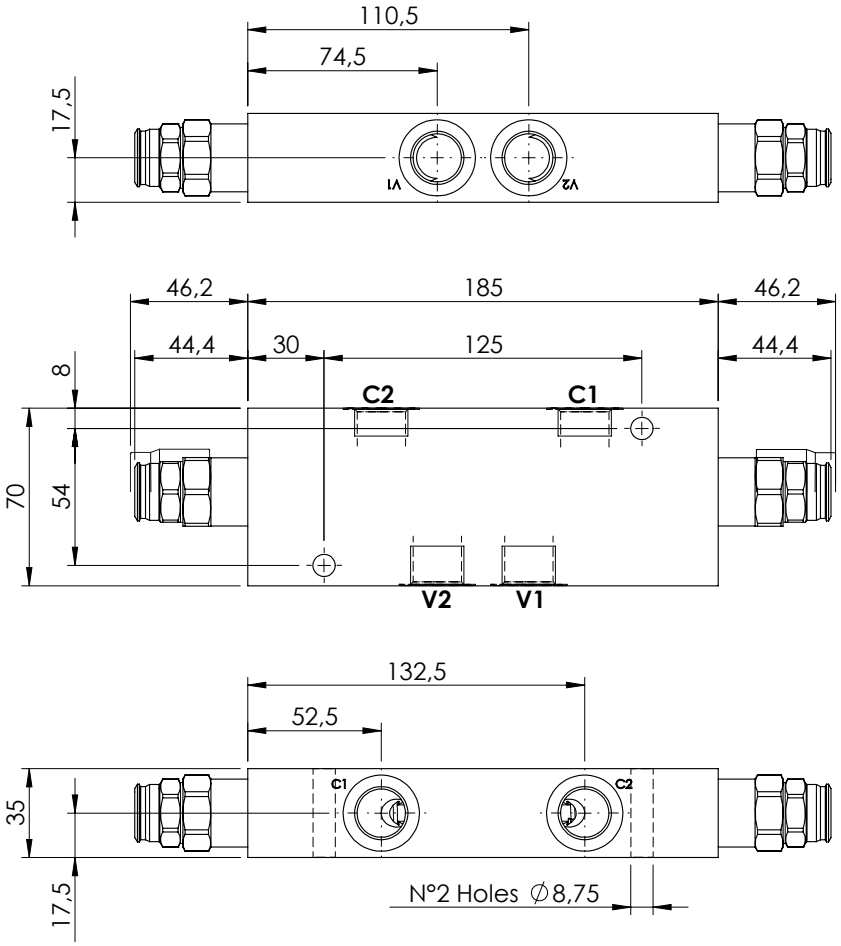

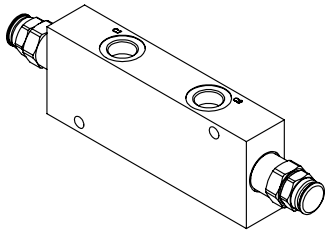

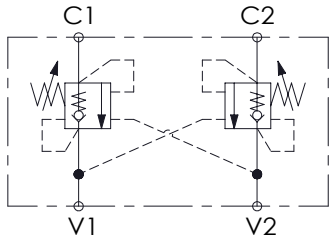

SPECIFICATIONS

Max. operating pressure:	350 bar
Rated flow:	100 l/min
Manifold:	Steel
Weight:	Steel 3,42 kg

SEALING CAP

Ordering code:

PT000243

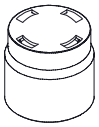

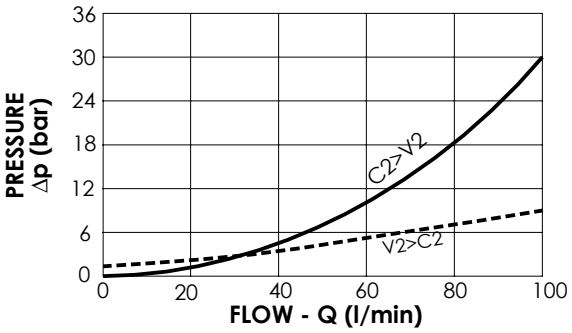

NOTES

Setting: at least 1.3 times the load induced pressure

ORDERING CODES

Quick code	Description	Pilot ratio	Main ports size	Manifold material	Standard setting (bar, Q=5 l/min)	Adjust. range (bar)	Pressur increase (bar/turn)
MB000398	MBDN-100-ALDE-04-G12-N350	4:1	V1,V2: **G 1/2"** C1,C2: **G 1/2"**	Steel	350	100-350	118
MB000400	MBDN-100-ALDE-04-G12-N200	4:1	V1,V2: **G 1/2"** C1,C2: **G 1/2"**	Steel	200	70-210	68
MB000395	MBDN-100-ALDE-08-G12-N350	8:1	V1,V2: **G 1/2"** C1,C2: **G 1/2"**	Steel	350	100-350	132
MB000401	MBDN-100-ALDE-08-G12-N200	8:1	V1,V2: **G 1/2"** C1,C2: **G 1/2"**	Steel	200	70-210	74

OVERCENTRE VALVE

MBDN-100-ABNR

DOUBLE ACTING TWO FLANGED PORTS

ATLANTIC Fluid Tech

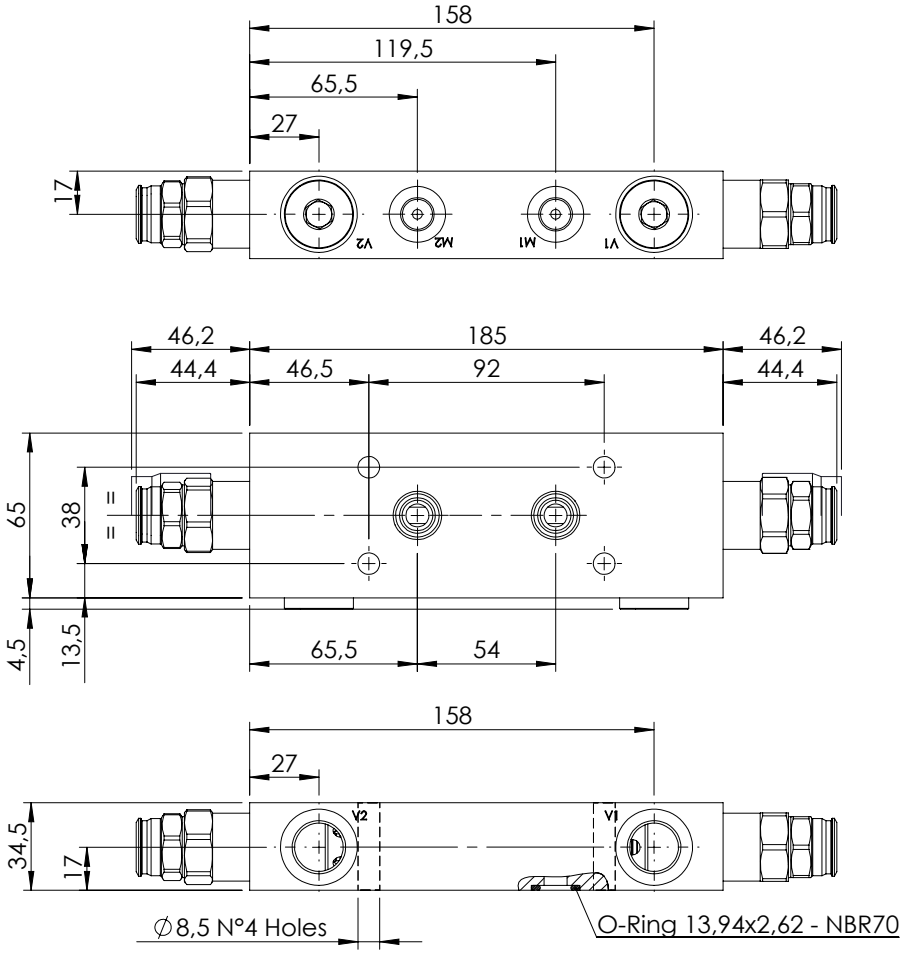

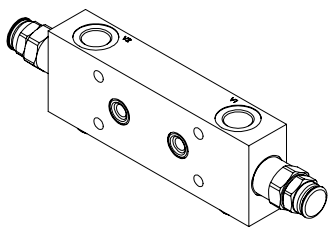

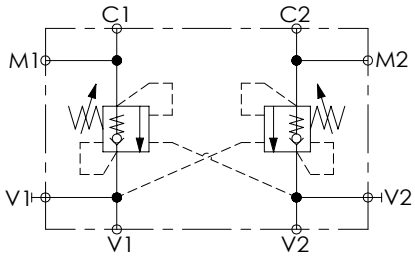

SPECIFICATIONS

Max. operating pressure:	**350 bar**
Rated flow:	**100 l/min**
Manifold:	**Steel**
Weight:	**3,19 kg**

SEALING CAP

Ordering code:

PT000243

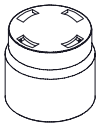

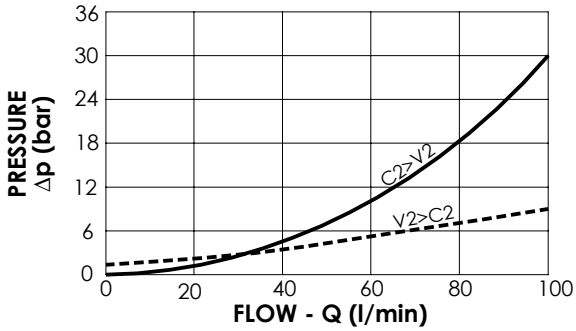

NOTES

Setting: at least 1.3 times the load induced pressure

ORDERING CODES

Quick code	Description	Pilot ratio	Main ports size	Standard setting (bar, Q=5 l/min)	Adjust. range (bar)	Pressure increase (bar/turn)
MB000911	**MBDN-100-ABNR-04-G12-N350**	**4:1**	V1,V2:**G 1/2"** C1,C2: **Ø9** M1,M2:**G 1/4"**	**350**	**100-350**	**118**

OVERCENTRE VALVE

MBDN-150-ZLDE

DOUBLE ACTING

ATLANTIC Fluid Tech

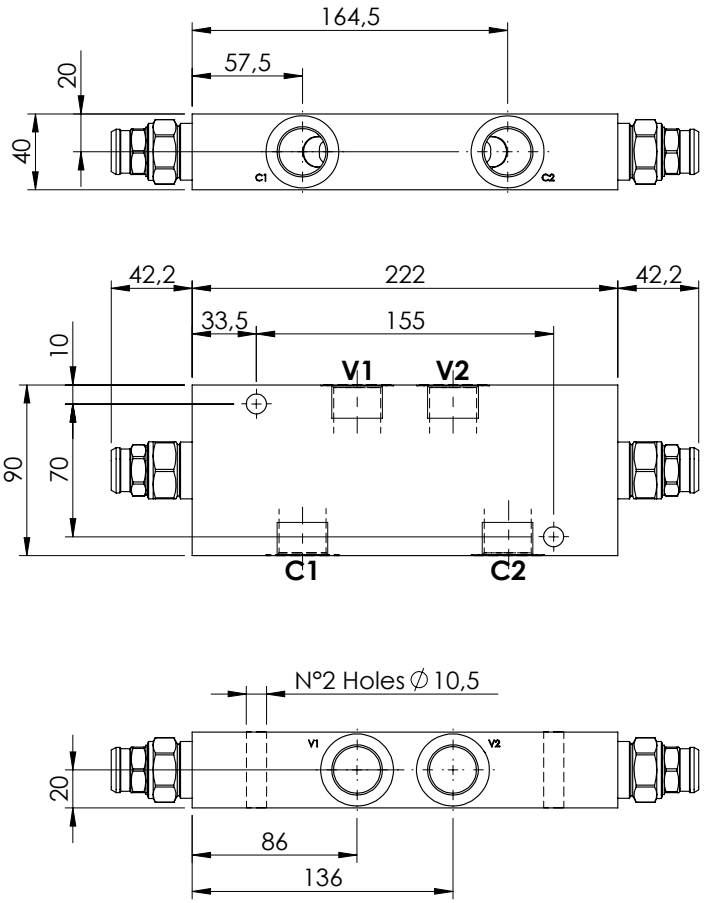

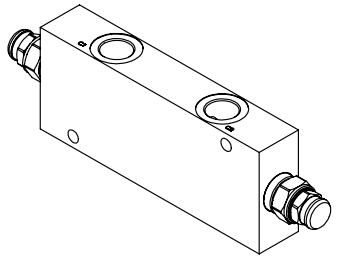

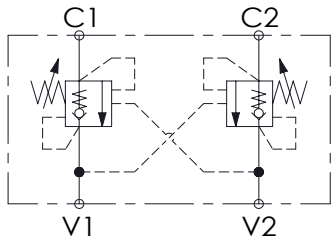

SPECIFICATIONS

Max. operating pressure:	**350 bar**
Rated flow:	**150 l/min**
Weight:	**Aluminium 2,4 kg; Steel 5.7 kg**

SEALING CAP

Ordering code:

ST000012

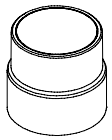

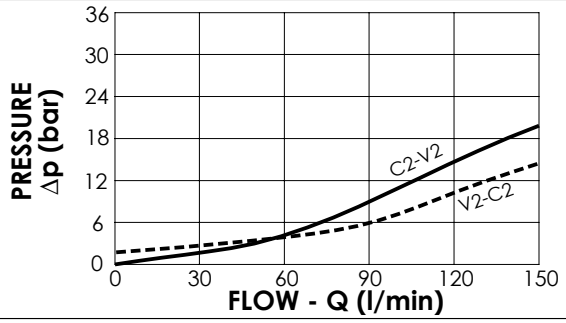

NOTES

Setting: at least 1.3 times the load induced pressure

ORDERING CODES

Quick code	Description	Pilot ratio	Manifold material	Main ports size	Standard setting (bar,Q=5 l/min)	Adjust. range (bar)	Pressure increase (bar/turn)
MB000414	**MBDN-150-ZLDE-04-G34-N350**	**4:1**	**Aluminium**	V1, V2: **G3/4"** C1, C2: **G3/4"**	**350**	**100-350**	**104**
MB000415	**MBDN-150-ZLDE-04-G34-N200**	**4:1**	**Aluminium**	V1, V2: **G3/4"** C1, C2: **G3/4"**	**200**	**60-210**	**56**
MB000407	**MBDN-150-ZLDE-08-G34-N350**	**8:1**	**Aluminium**	V1, V2: **G3/4"** C1, C2: **G3/4"**	**350**	**100-350**	**82**
MB000408	**MBDN-150-ZLDE-08-G34-N200**	**8:1**	**Aluminium**	V1, V2: **G3/4"** C1, C2: **G3/4"**	**200**	**60-210**	**47**
MB000420	**MBDN-150-ALDE-04-G34-N350**	**4:1**	**Steel**	V1, V2: **G3/4"** C1, C2: **G3/4"**	**350**	**100-350**	**104**
MB000421	**MBDN-150-ALDE-04-G34-N200**	**4:1**	**Steel**	V1, V2: **G3/4"** C1, C2: **G3/4"**	**200**	**60-210**	**56**
MB000418	**MBDN-150-ALDE-08-G34-N350**	**8:1**	**Steel**	V1, V2: **G3/4"** C1, C2: **G3/4"**	**350**	**100-350**	**82**
MB000419	**MBDN-150-ALDE-08-G34-N200**	**8:1**	**Steel**	V1, V2: **G3/4"** C1, C2: **G3/4"**	**200**	**60-210**	**47**

OVERCENTRE VALVE

MBDN-150-ZLNP

DOUBLE ACTING

ATLANTIC Fluid Tech

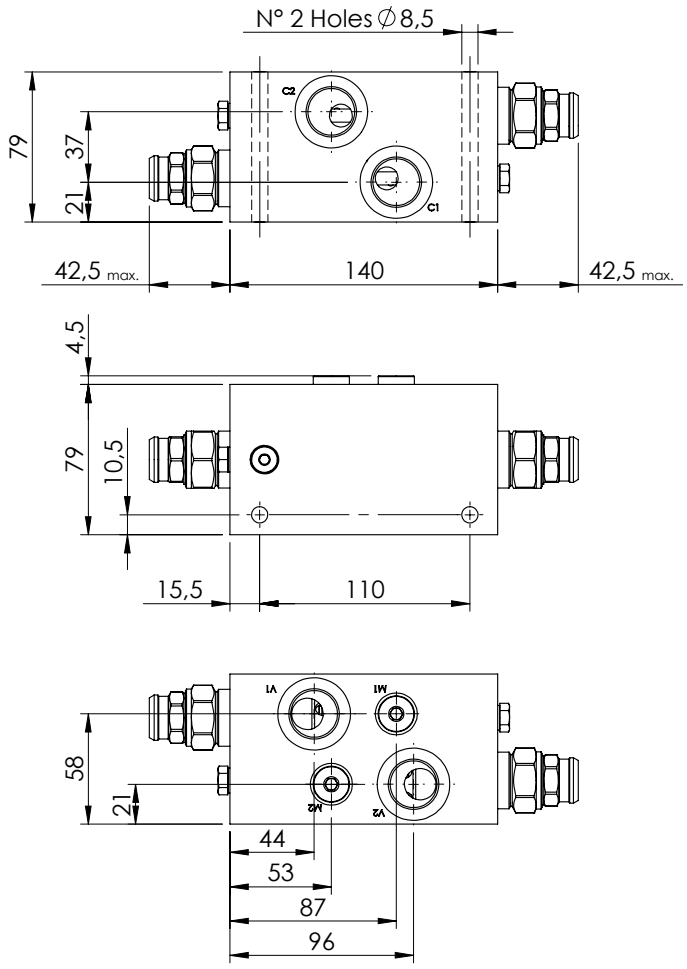

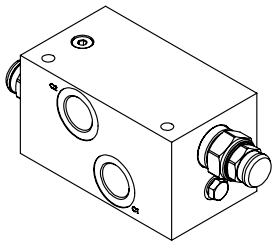

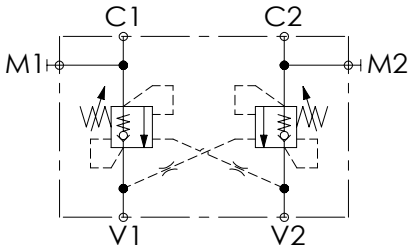

SPECIFICATIONS

Max. operating pressure:	**350 bar**
Rated flow:	**150 l/min**
Manifold:	**Aluminium**
Weight:	**2,69 kg**

SEALING CAP

Ordering code:

ST000012

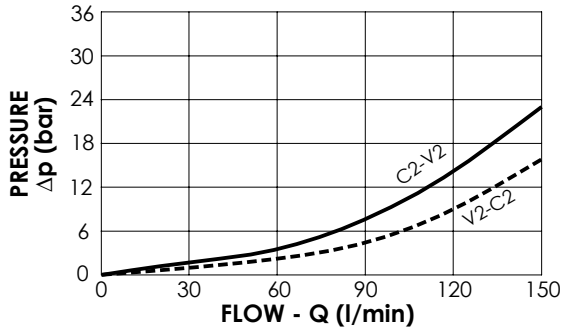

NOTES

Setting: at least 1.3 times the load induced pressure

ORDERING CODES

Quick code	Description	Pilot ratio	Main ports size	Standard setting (bar, Q=5 l/min)	Adjust. range (bar)	Pressure increase (bar/turn)
MB000210	**MBDN-150-ZLNP-04-G34-N350**	**4:1**	V1, V2: **G3/4"** C1, C2: **G3/4"**	**350**	**100-350**	**104**

OVERCENTRE VALVE

MBDN-150-ZBNV

DOUBLE ACTING TWO FLANGED PORTS

ATLANTIC Fluid Tech

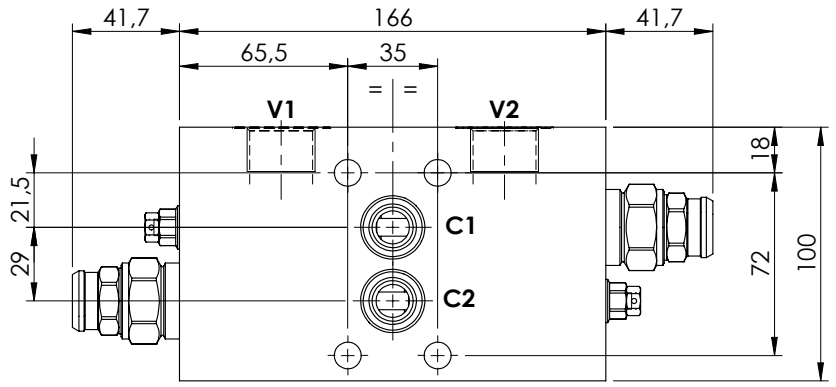

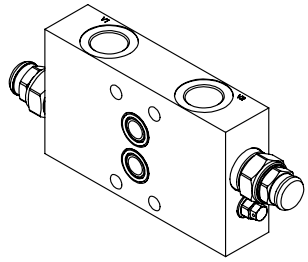

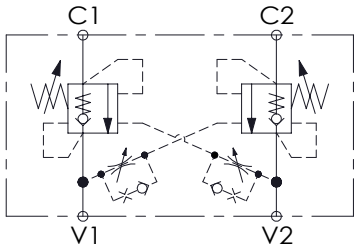

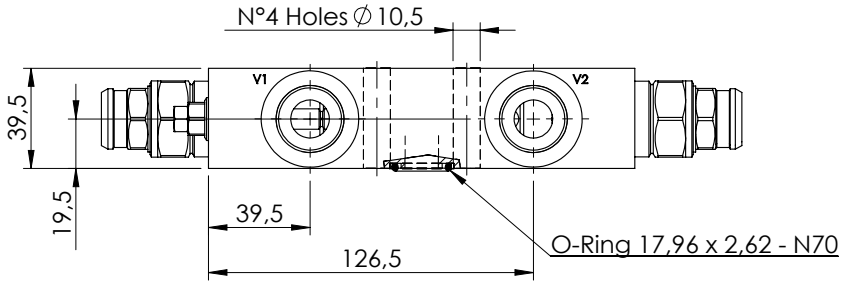

SPECIFICATIONS

Max. operating pressure:	350 bar
Rated flow:	150 l/min
Manifold:	Aluminium
Weight:	2,15 kg

SEALING CAP

Ordering code:
ST000012

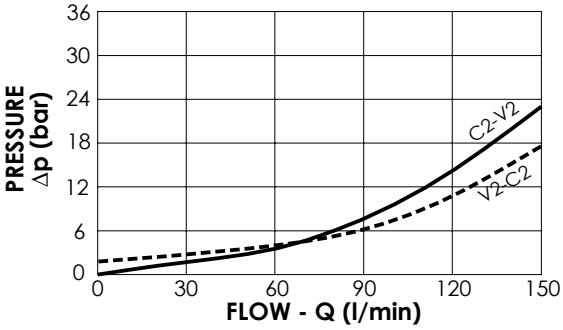

NOTES

Setting: at least 1.3 times the load induced pressure

ORDERING CODES

Quick code	Description	Pilot ratio	Main ports size	Standard setting (bar, Q=5 l/min)	Adjust. range (bar)	Pressure increase (bar/turn)
MB000428	**MBDN-150-ZBNV-04-G34-N350**	**4:1**	V1,V2 : **G3/4"** C1,C2 : ∅ **13**	**350**	**100-350**	**104**

OVERCENTRE VALVE

MBDN-300-ZLNR

DOUBLE ACTING

ATLANTIC Fluid Tech

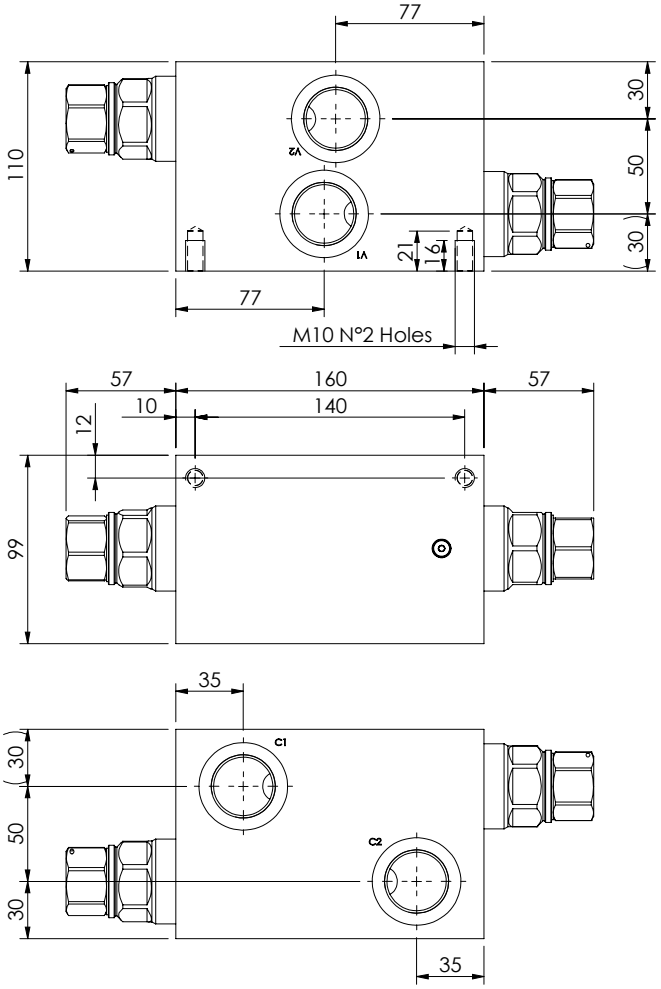

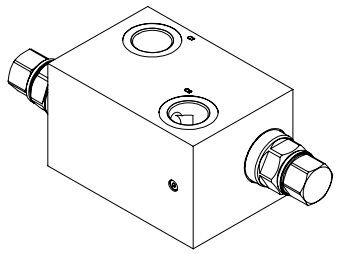

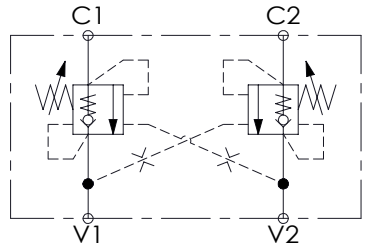

SPECIFICATIONS

Max. operating pressure:	**350 bar**
Rated flow:	**300 l/min**
Manifold:	**Aluminium**
Weight:	**5,4 kg**

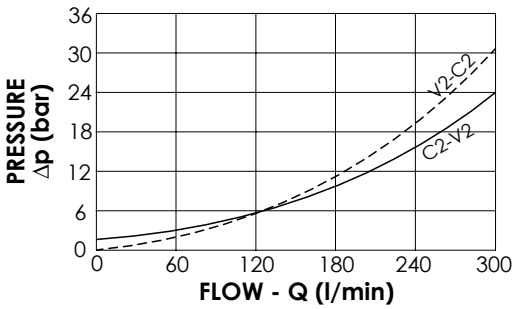

NOTES

Setting: at least 1.3 times the load induced pressure

ORDERING CODES

Quick code	Description	Pilot ratio	Main ports size	Standard setting (bar, Q=5 l/min)	Adjust. range (bar)	Pressure increase (bar/turn)
MB000638	**MBDN-300-ZLNR-04-G10-N350**	**4:1**	V1,V2,C1,C2: **G 1"**	**350**	**100 - 350**	**75**

OVERCENTRE VALVE

MBDP-060-ALNR

DOUBLE ACTING RELIEF COMPENSATED

ATLANTIC Fluid Tech

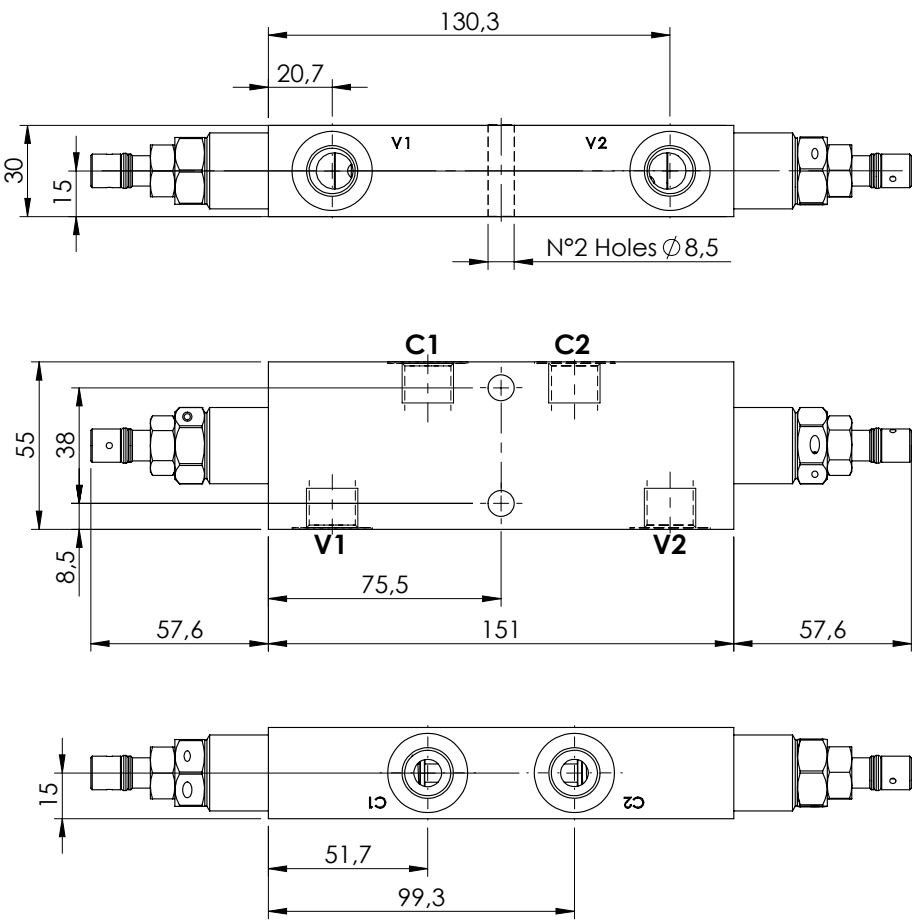

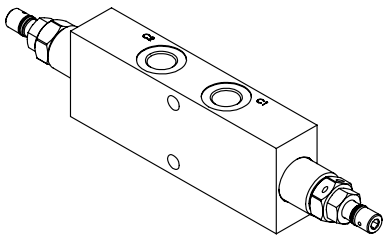

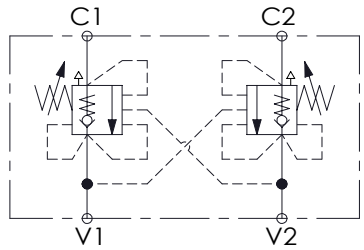

SPECIFICATIONS

Max. operating pressure:	**350 bar**
Rated flow:	**60 l/min**
Manifold:	**Steel**
Weight:	**1,98 kg**

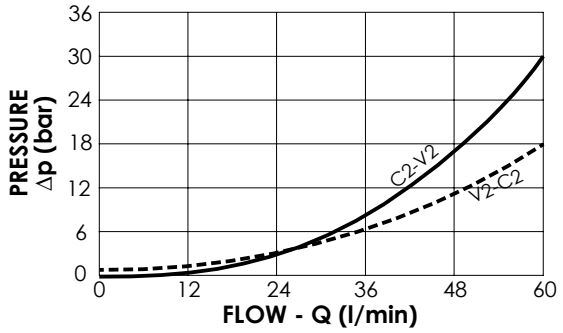

NOTES

Setting: at least 1.3 times the load induced pressure

ORDERING CODES

Quick code	Description	Pilot ratio	Main ports size	Standard setting (bar, Q=5 l/min)	Adjust. range (bar)	Pressure increase (bar/turn)
MB000190	**MBDP-060-ALNR-04-G38-N350**	**4,2:1**	V1, V2: **G3/8"** C1, C2: **G3/8"**	**350**	**100-350**	**166**
MB000191	**MBDP-060-ALNR-04-G38-N200**	**4,2:1**	V1, V2: **G3/8"** C1, C2: **G3/8"**	**200**	**60-210**	**75**

OVERCENTRE VALVE

MBDP-060-ALNR

DOUBLE ACTING RELIEF COMPENSATED

ATLANTIC Fluid Tech

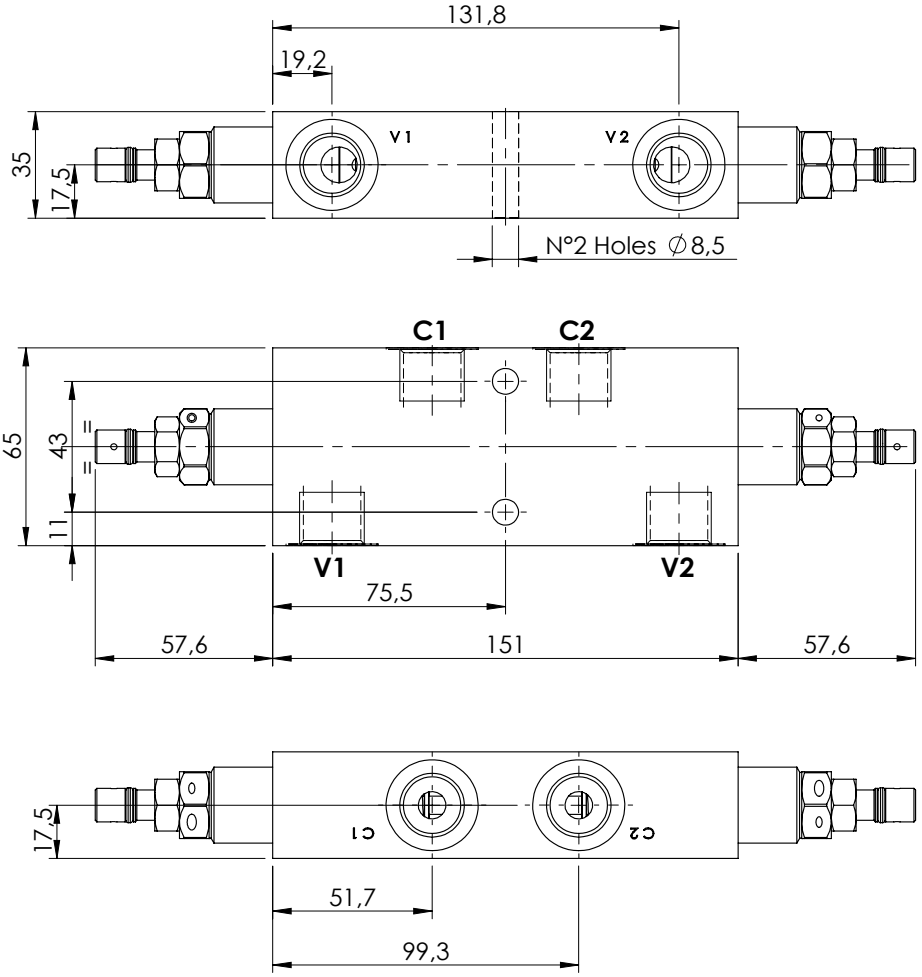

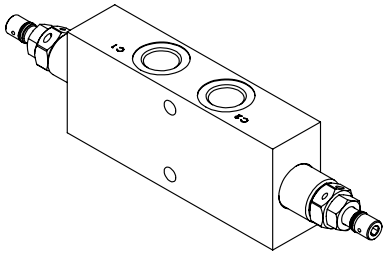

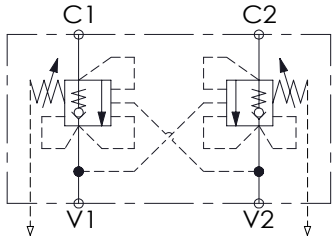

SPECIFICATIONS

Max. operating pressure:	**350 bar**
Rated flow:	**60 l/min**
Manifold:	**Steel**
Weight:	**2,62 kg**

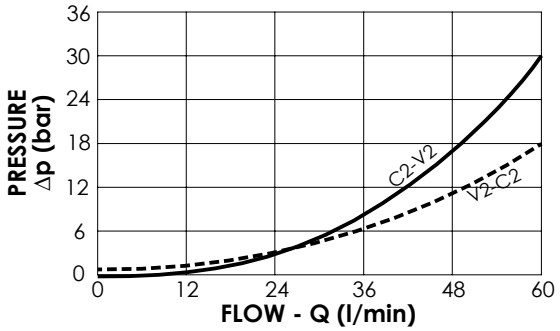

NOTES

Setting: at least 1.3 times the load induced pressure

ORDERING CODES

Quick code	Description	Pilot ratio	Main ports size	Standard setting (bar, Q=5 l/min)	Adjust. range (bar)	Pressure increase (bar/turn)
MB000176	**MBDP-060-ALNR-04-G12-N350**	**4,2:1**	V1, V2: **G1/2"** C1, C2: **G1/2"**	**350**	**100-350**	**166**
MB000189	**MBDP-060-ALNR-04-G12-N200**	**4,2:1**	V1, V2: **G1/2"** C1, C2: **G1/2"**	**200**	**60-210**	**75**

OVERCENTRE VALVE

MBDP-060-ZLDE

DOUBLE ACTING RELIEF COMPENSATED

ATLANTIC Fluid Tech

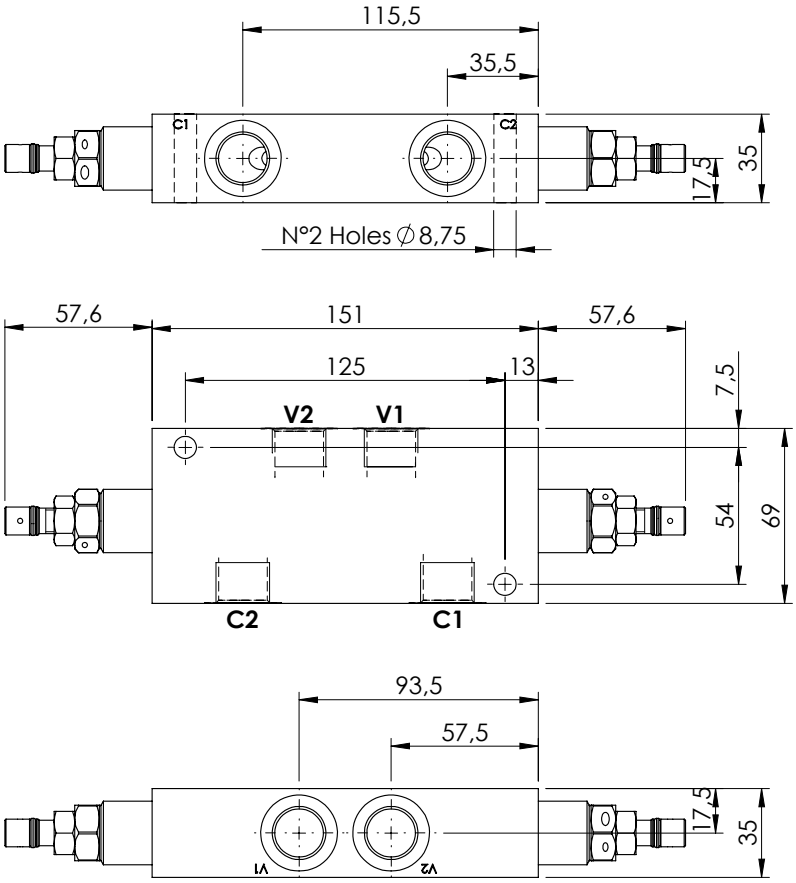

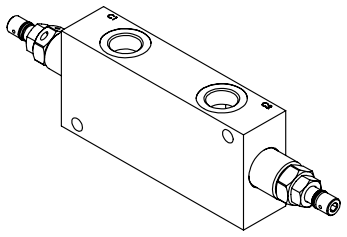

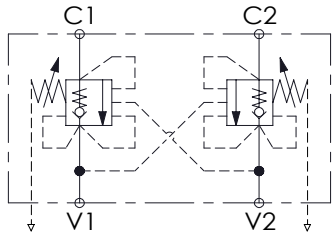

SPECIFICATIONS

Max. operating pressure:	**350 bar**
Rated flow:	**60 l/min**
Weight:	**Aluminium 1.1 kg; Steel 2.7 kg**

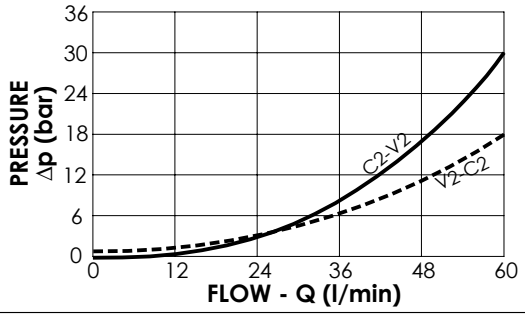

NOTES

Setting: at least 1.3 times the load induced pressure

ORDERING CODES

Quick code	Description	Pilot ratio	Manifold material	Main ports size	Standard setting (bar,Q=5 l/min)	Adjust. range (bar)	Pressure increase (bar/turn)
MB000322	**MBDP-060-ZLDE-04-G12-N350**	**4,2:1**	**Aluminium**	V1, V2: **G1/2"** C1, C2: **G1/2"**	**350**	**100-350**	**166**
MB000449	**MBDP-060-ZLDE-04-G12-N200**	**4,2:1**	**Aluminium**	V1, V2: **G1/2"** C1, C2: **G1/2"**	**200**	**60-210**	**75**
MB000450	**MBDP-060-ALDE-04-G12-N350**	**4,2:1**	**Steel**	V1, V2: **G1/2"** C1, C2: **G1/2"**	**350**	**100-350**	**166**
MB000451	**MBDP-060-ALDE-04-G12-N200**	**4,2:1**	**Steel**	V1, V2: **G1/2"** C1, C2: **G1/2"**	**200**	**60-210**	**75**

OVERCENTRE VALVE

MBDP-150-ZLDE

DOUBLE ACTING RELIEF COMPENSATED

ATLANTIC Fluid Tech

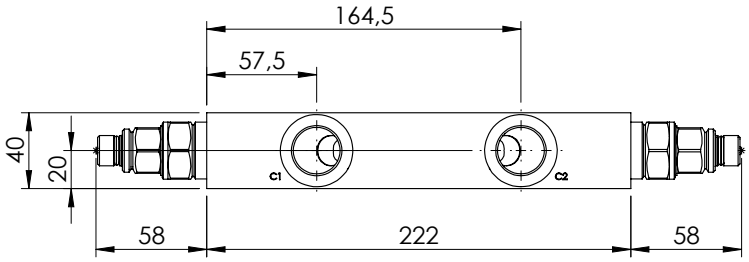

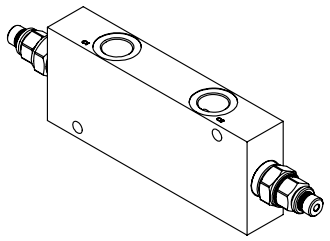

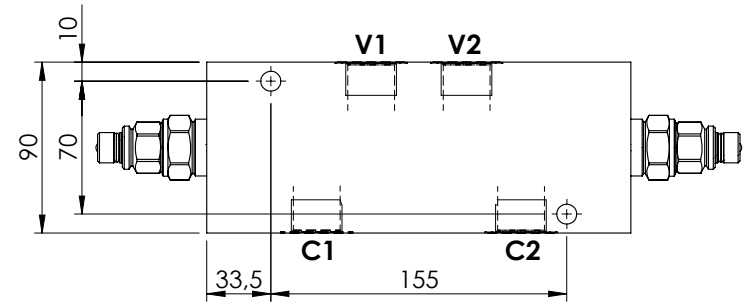

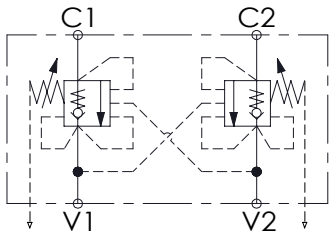

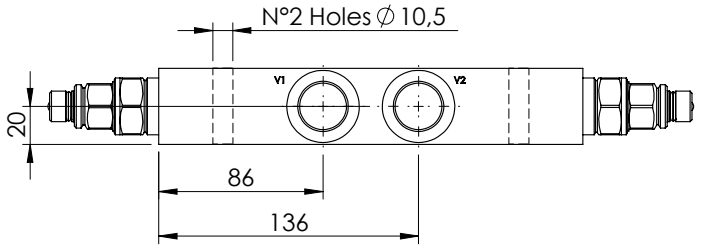

SPECIFICATIONS

Max. operating pressure:	350 bar
Rated flow:	150 l/min
Weight: Aluminium 2,5 kg; Steel 5.84 kg	

SEALING CAP

Ordering code:

ST000012

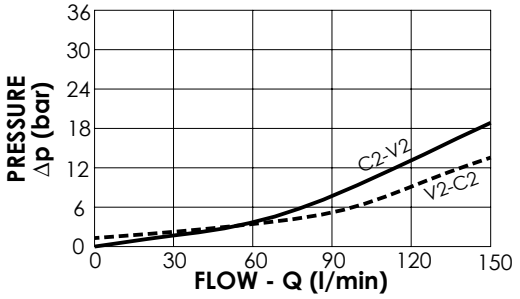

NOTES

Setting: at least 1.3 times the load induced pressure

Hex key for setting the valve:

Ordering code:

PV000669

ORDERING CODES

Quick code	Description	Pilot ratio	Manifold material	Main ports size	Standard setting (bar,Q=5 l/min)	Adjust. range (bar)	Pressure increase (bar/turn)
MB000436	**MBDP-150-ZLDE-04-G34-N350**	**4:1**	**Aluminium**	V1, V2: **G3/4"** C1, C2: **G3/4"**	**350**	**100-350**	**104**
MB000437	**MBDP-150-ZLDE-04-G34-N200**	**4:1**	**Aluminium**	V1, V2: **G3/4"** C1, C2: **G3/4"**	**200**	**60-210**	**56**
MB000438	**MBDP-150-ALDE-04-G34-N350**	**4:1**	**Steel**	V1, V2: **G3/4"** C1, C2: **G3/4"**	**350**	**100-350**	**104**
MB000439	**MBDP-150-ALDE-04-G34-N200**	**4:1**	**Steel**	V1, V2: **G3/4"** C1, C2: **G3/4"**	**200**	**60-210**	**56**
MB000416	**MBDP-150-ZLDE-08-G34-N350**	**8:1**	**Aluminium**	V1, V2: **G3/4"** C1, C2: **G3/4"**	**350**	**200-350**	**82**
MB000417	**MBDP-150-ZLDE-08-G34-N200**	**8:1**	**Aluminium**	V1, V2: **G3/4"** C1, C2: **G3/4"**	**200**	**60-210**	**47**
MB000422	**MBDP-150-ALDE-08-G34-N350**	**8:1**	**Steel**	V1, V2: **G3/4"** C1, C2: **G3/4"**	**350**	**200-350**	**82**
MB000423	**MBDP-150-ALDE-08-G34-N200**	**8:1**	**Steel**	V1, V2: **G3/4"** C1, C2: **G3/4"**	**200**	**60-210**	**47**

OVERCENTRE VALVE

MBDT-150-ZBNV

DOUBLE ACTING
TWO FLANGED PORTS
COMPENSATED

ATLANTIC Fluid Tech

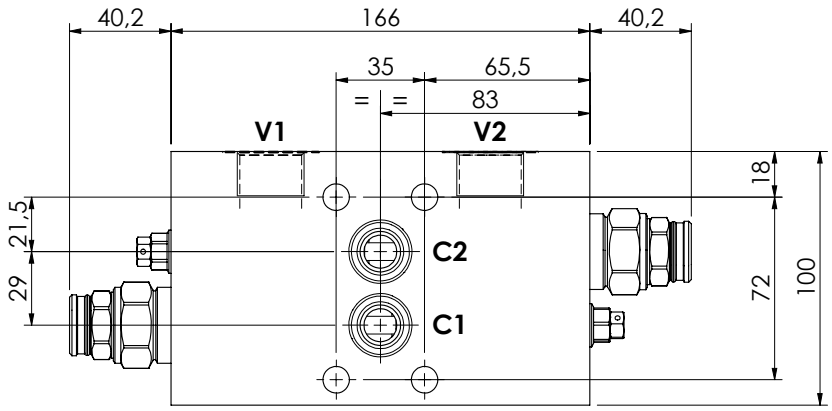

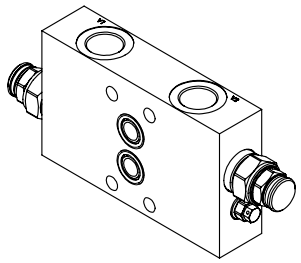

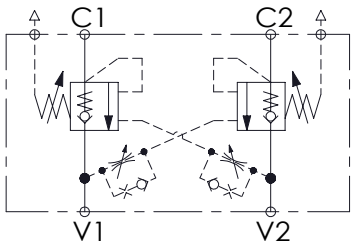

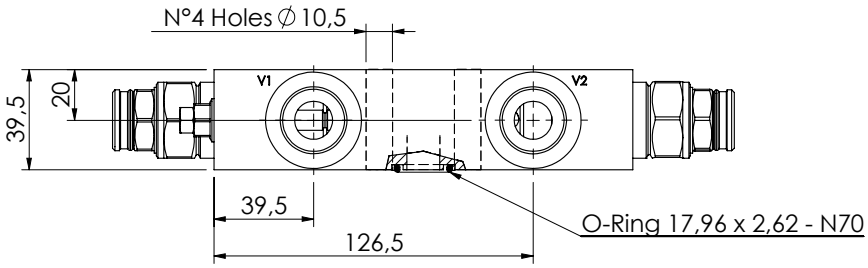

SPECIFICATIONS

Max. operating pressure:	**350 bar**
Rated flow:	**150 l/min**
Weight: Aluminium 2,14 kg; Steel 4,85 kg	

SEALING CAP

Ordering code:

ST000012

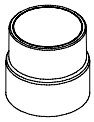

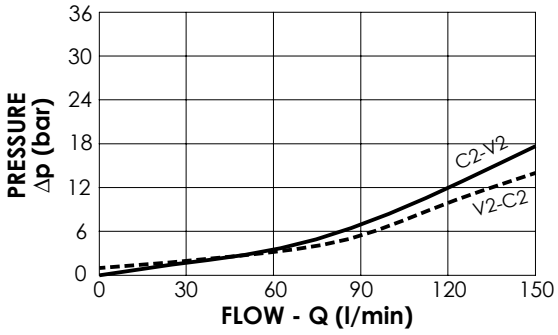

NOTES

Setting: at least 1.3 times the load induced pressure

ORDERING CODES

Quick code	Description	Pilot ratio	Manifold material	Main ports size	Standard setting (bar, Q=5 l/min)	Adjust. range (bar)	Pressure increase (bar/turn)
MB000429	**MBDT-150-ZBNV-04-G34-N350**	**4:1**	**Aluminium**	V1,V2: **G 3/4"** C1,C2: ∅**13**	**350**	**100-350**	**104**
MB000641	**MBDT-150-ZBNV-04-G12-N350**	**4:1**	**Aluminium**	V1,V2: **G 1/2"** C1,C2: ∅**13**	**350**	**100-350**	**104**
MB000646	**MBDT-150-ABNV-04-G34-N350**	**4:1**	**Steel**	V1,V2: **G 3/4"** C1,C2: ∅**13**	**350**	**100-350**	**104**
MB000647	**MBDT-150-ABNV-04-G12-N350**	**4:1**	**Steel**	V1,V2: **G 1/2"** C1,C2: ∅**13**	**350**	**100-350**	**104**

OVERCENTRE VALVE

MBDN-500-ABNR

DOUBLE ACTING

ATLANTIC Fluid Tech

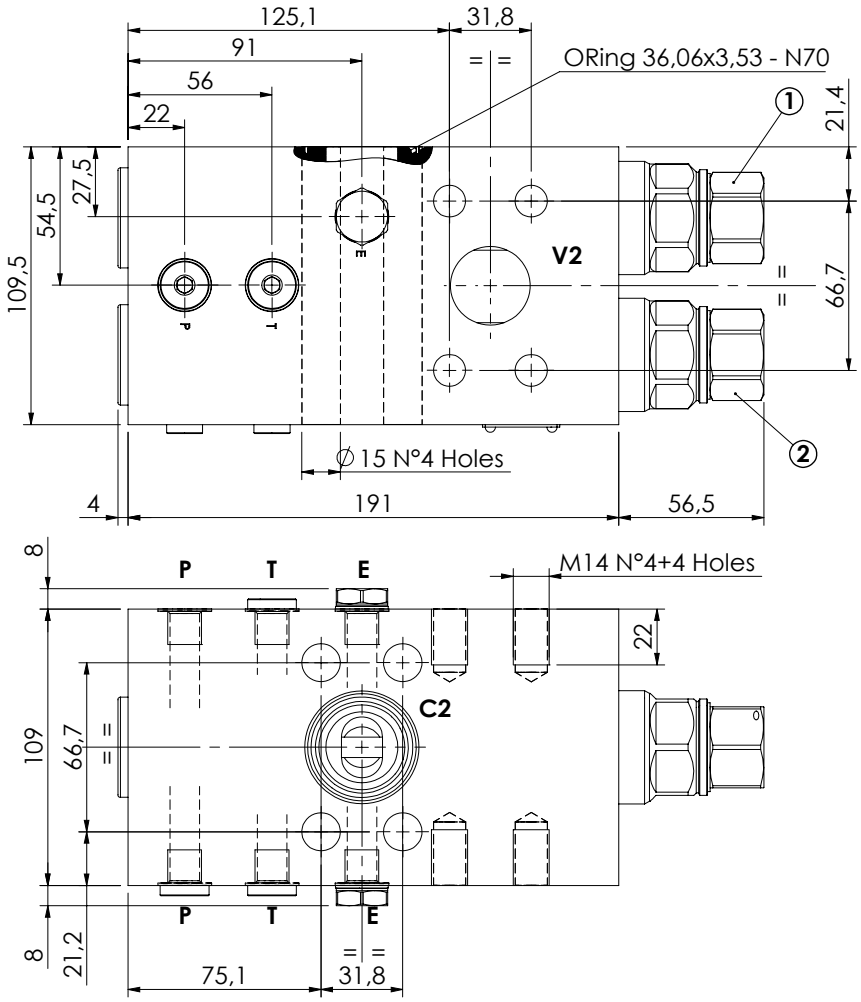

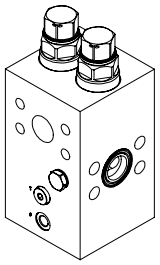

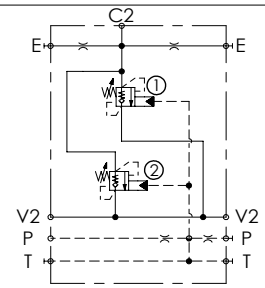

SPECIFICATIONS

Max. operating pressure:	**420 bar**
Rated flow:	**500 l/min**
Manifold:	**Steel**
Weight:	**16,32 kg**

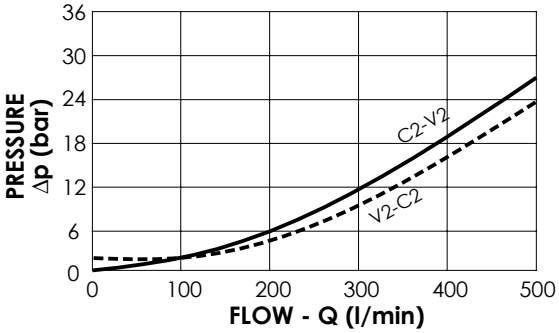

NOTES

T line plugs must be kept closed

ORDERING CODES

Quick code	Description	Pilot ratio	Main ports size	Standard setting (bar)	Adjust. range (bar)	Pressure increase (bar/turn)
MB000979	**MBDN-500-ABNR-06-S11-N420**	**6:1**	V2,C2:**1 1/4" SAE 6000** P,T,E: **G 1/4"**	**420**	**250-420**	**104**

OVERCENTRE VALVE

MBDN-500-ABNR

DOUBLE ACTING

ATLANTIC Fluid Tech

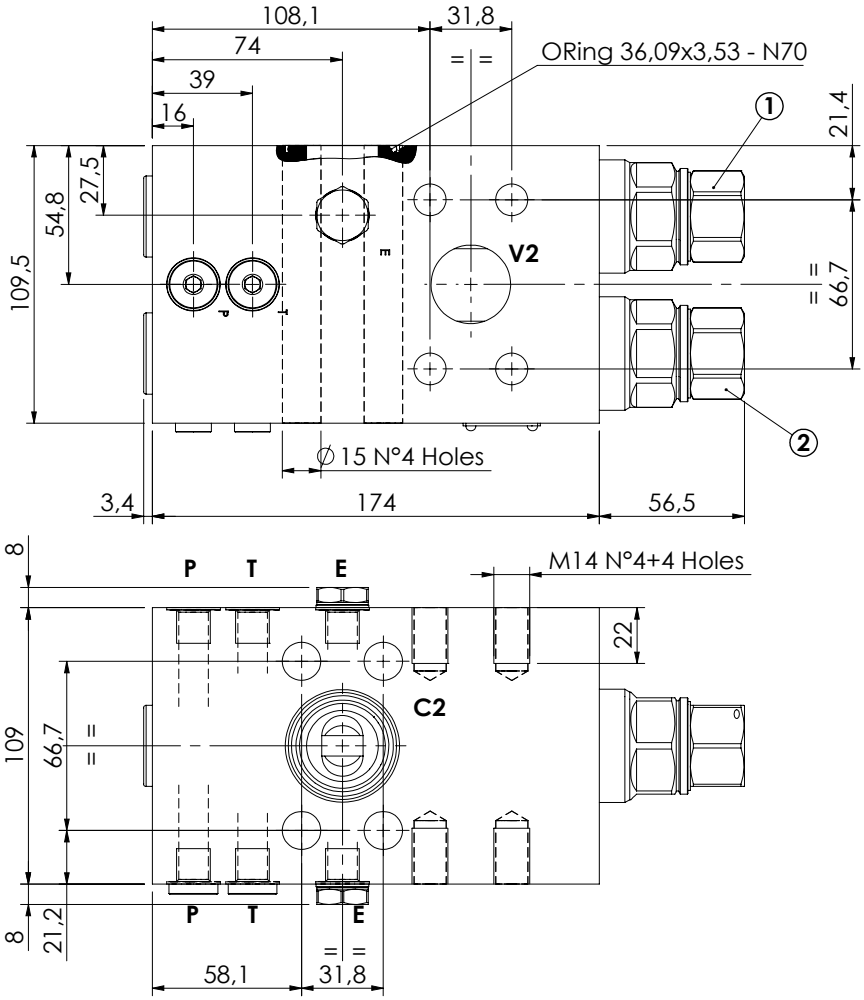

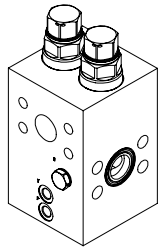

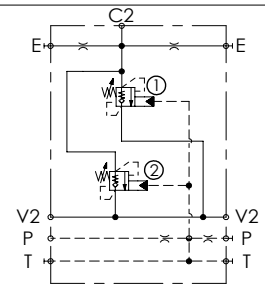

SPECIFICATIONS

Max. operating pressure:	**420 bar**
Rated flow:	**500 l/min**
Manifold:	**Steel**
Weight:	**14,78 kg**

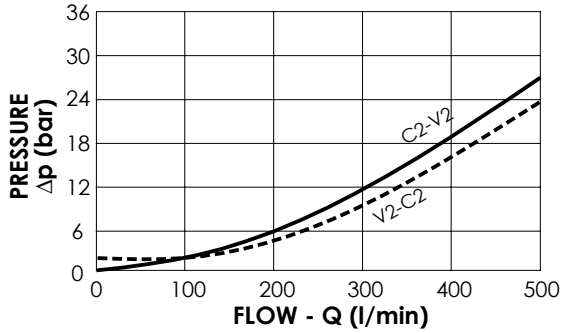

NOTES

T line plugs must be kept closed

ORDERING CODES

Quick code	Description	Pilot ratio	Main ports size	Standard setting (bar)	Adjust. range (bar)	Pressure increase (bar/turn)
MB000978	**MBDN-500-ABNR-13-S11-N420**	**13:1**	V2,C2:**1 1/4" SAE 6000** P,T,E: **G 1/4"**	**350**	**250-420**	**104**

ATLANTIC
Fluid Tech

SECTION 7

Regeneratives Valves

MANAGEMENT SYSTEM CERTIFICATION
DNV·GL
ISO 9001 = ISO 14001
OHSAS 18001

REGENERATIVE VALVES

ATLANTIC Fluid Tech

Hydraulic scheme	Valve description	Valve type	Rated flow (l/min)	Max. pressure (bar)	Installation	Main port size or cavity type	Page
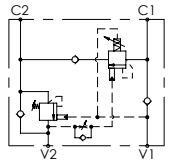	MRSN-060-ZBNV	Single overcentre with regenerative	60	350	Flanged	G 3/8"	7.01.**010**
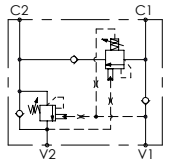	MRLN-060-ZLNP	Single overcentre with regenerative	60	350	In line	G 1/2"	7.02.**020**
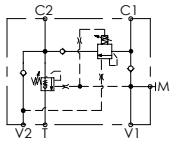	MRSN-150-ZLNV	Single overcentre with regenerative	150	350	In line	G 1/2"	7.03.**030**
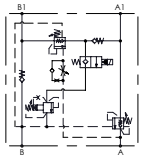	MRDN-100-ZLNV	Double overcentre with regenerative	100	350	In line	G 3/4"	7.04.**040**
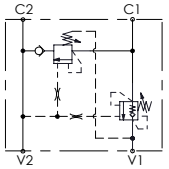	MRSN-300-ABNV	Single overcentre with regenerative	300	420	Flanged	3/4" SAE 6000	7.05.**050**
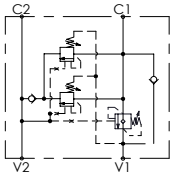	MRSN-300-ABNE	Single overcentre with double regenerative	500	420	Flanged	1"-1/4 SAE 6000	7.06.**060**

REGENERATIVE VALVE

MRSN-060-ZBNV

REGENERATIVE

ATLANTIC Fluid Tech

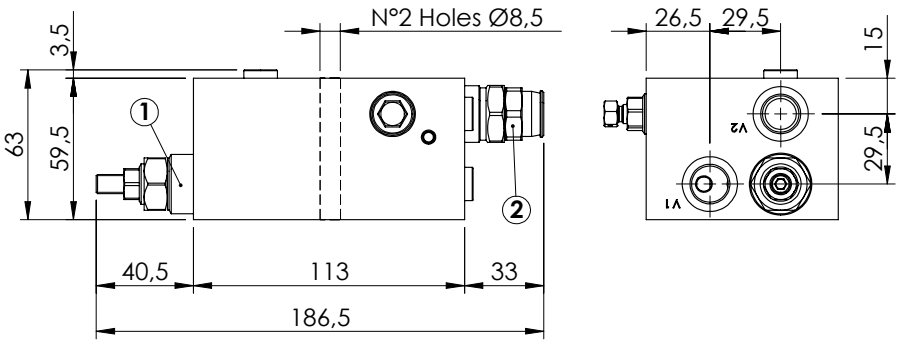

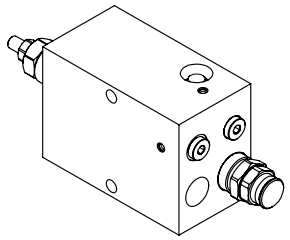

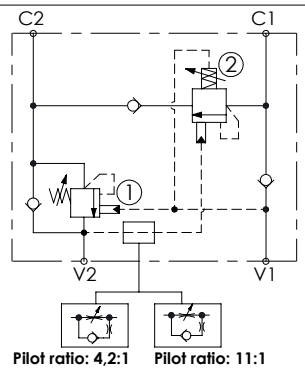

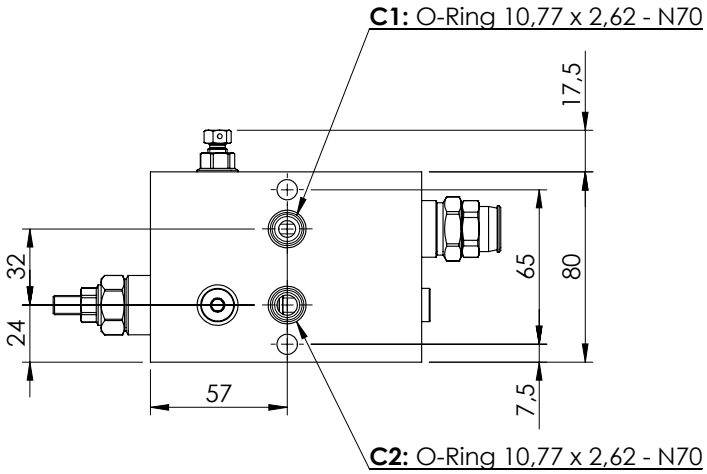

SPECIFICATIONS

Max. operating pressure:	**350 bar**
Rated flow:	**60 l/min**
Manifold:	**Aluminium**
Weight:	**1,6 kg**

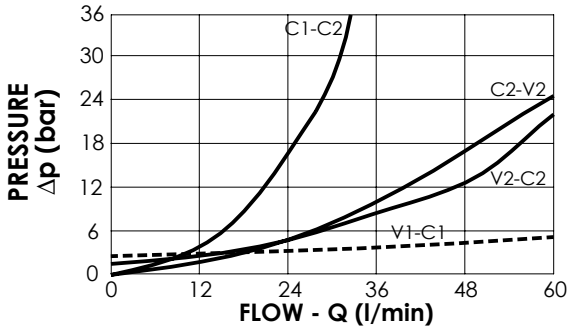

NOTES

Setting: at least 1.3 times the load induced pressure

Designed for aerial platforms

ORDERING CODES

Quick code	Description	Pilot ratio	Main ports size	Standard setting (bar, Q=5 l/min)	Adjust. range (bar)	Pressure increase (bar/turn)
MB000035	**MRSN-060-ZBNV-11-G38-N350**	**11:1**	V1,V2 : **G3/8"** C1,C2 : ∅ **7**	**350**	**100-350**	**69**
MB000085	**MRSN-060-ZBNV-04-G38-N350**	**4,2:1**	V1,V2 : **G3/8"** C1,C2 : ∅ **7**	**350**	**100-350**	**139**

REGENERATIVE VALVE

MRSN-060-ZLNP

REGENERATIVE

ATLANTIC Fluid Tech

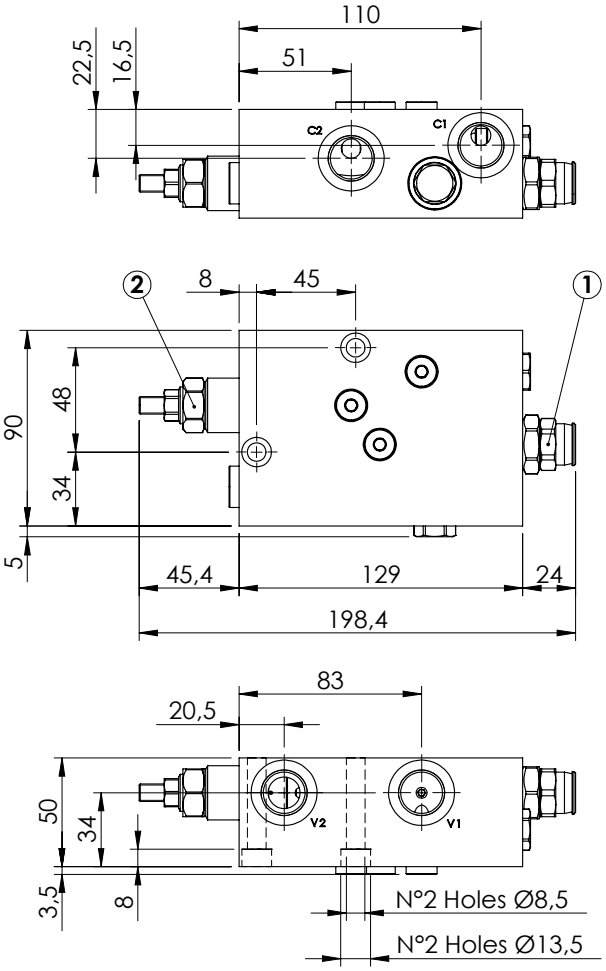

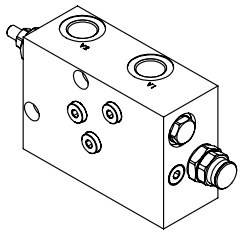

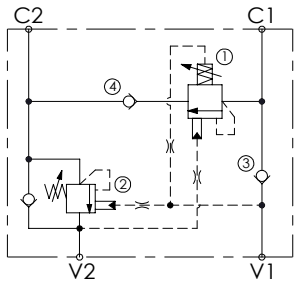

SPECIFICATIONS

Max. operating pressure:	**350 bar**
Rated flow:	**60 l/min**
Manifold:	**Aluminium**
Weight:	**1,71 kg**

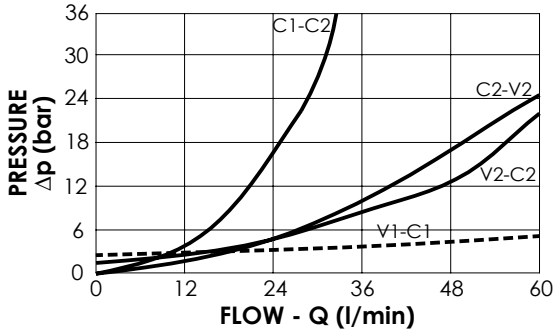

NOTES

Setting: at least 1.3 times the load induced pressure

ORDERING CODES

Quick code	Description	Pilot ratio	Main ports size	Standard setting (bar, Q=5 l/min)	Adjust. range (bar)	Pressure increase (bar/turn)
MB000150	**MRSN-060-ZLNP-04-G12-N350**	**4,2:1**	V1,V2,C1,C2 : **G 1/2"**	**170**	**60-210**	**62**

REGENERATIVE VALVE

MRSN-150-ZLNV

REGENERATIVE

ATLANTIC Fluid Tech

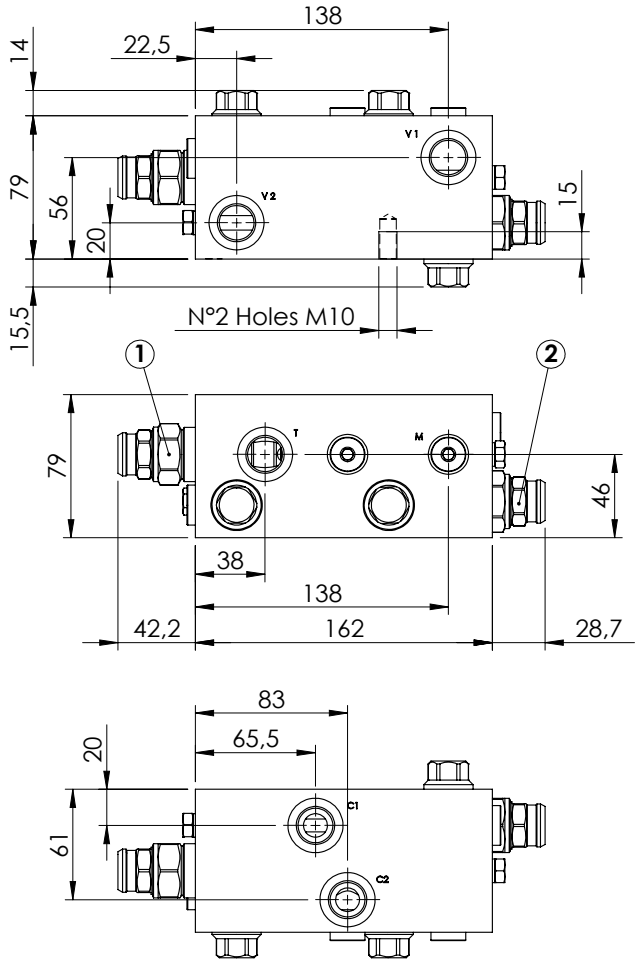

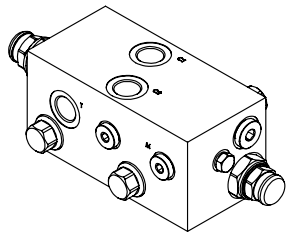

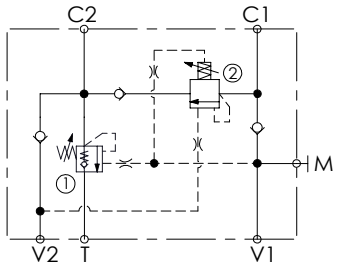

SPECIFICATIONS

Max. operating pressure:	**350 bar**
Rated flow:	**150 l/min**
Manifold:	**Aluminium**
Weight:	**3,18 kg**

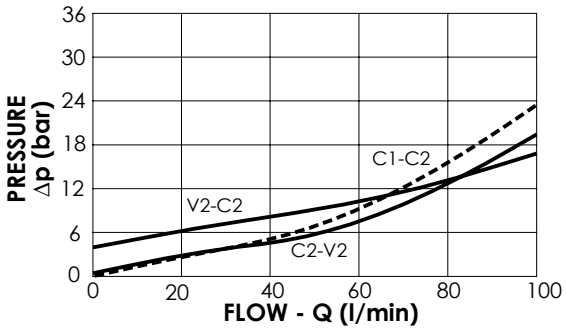

NOTES

Setting: at least 1.3 times the load induced pressure

Designed for truck mounted cranes

ORDERING CODES

Quick code	Description	Pilot ratio	Main ports size	Standard setting (bar, Q=5 l/min)	Adjust. range (bar)	Pressure increase (bar/turn)
MB000113	**MRSN-150-ZLNV-04-G12-N350**	**4:1**	V1,V2,C1,C2,T : **G1/2"** M: **G1/4"**	**350**	**100-350**	**104**

REGENERATIVE VALVE

MRDN-150-ZLNV

REGENERATIVE

ATLANTIC Fluid Tech

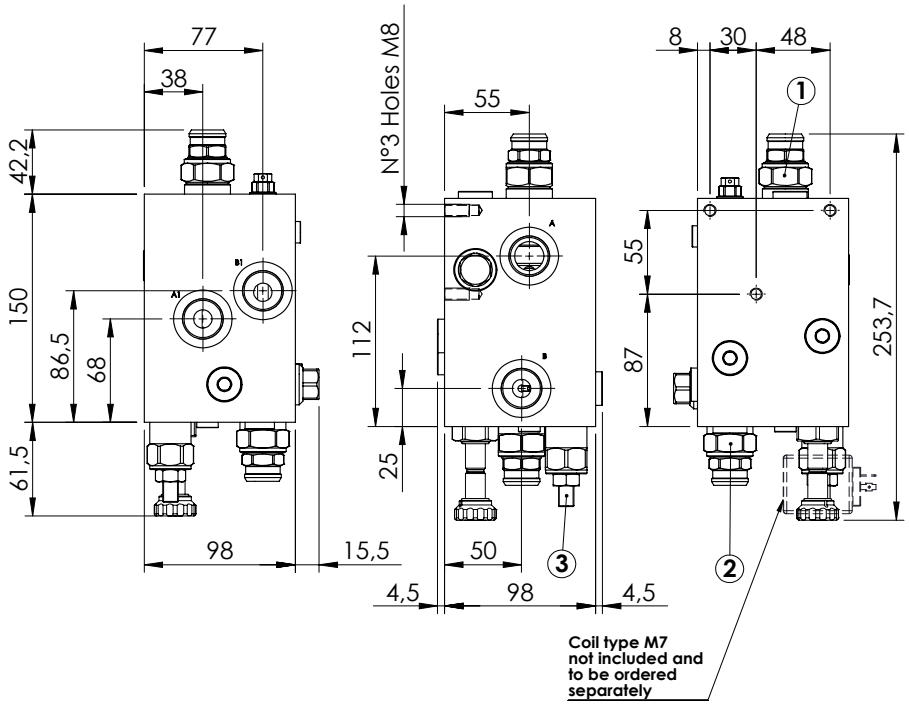

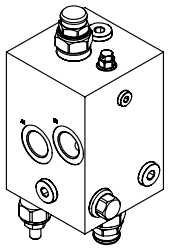

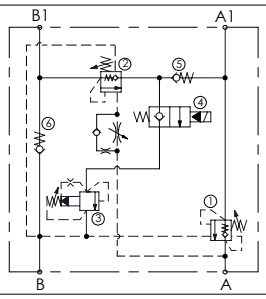

SPECIFICATIONS

Max. operating pressure:	210 bar
Rated flow:	100 l/min
Manifold:	Aluminium
Weight:	4,62 kg
Coil type:	M7

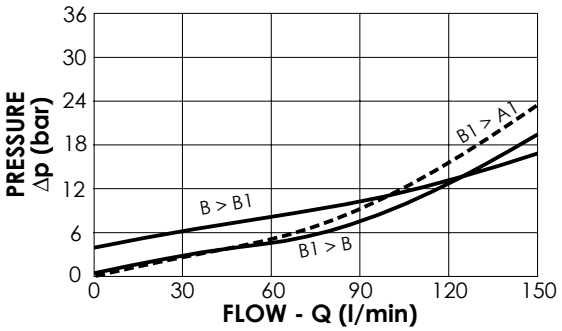

NOTES

Setting: at least 1.3 times the load induced pressure

Designed for truck mounted cranes

See chapter 18.00.000 for coils.

ORDERING CODES

Quick code	Description	Pilot ratio	Main ports size	Standard setting (bar, Q=5 l/min)	Adjust. range (bar)	Pressure increase (bar/turn)
MB000476	MRDN-100-ZLNV-04-G34-N210	4:1	A,A1,B,B1 : G3/4"	①②350 ③350	①②100-350 ③140-350	①②103 ③114

REGENERATIVE VALVE

MRSN-300-ABNV

REGENERATIVE

ATLANTIC Fluid Tech

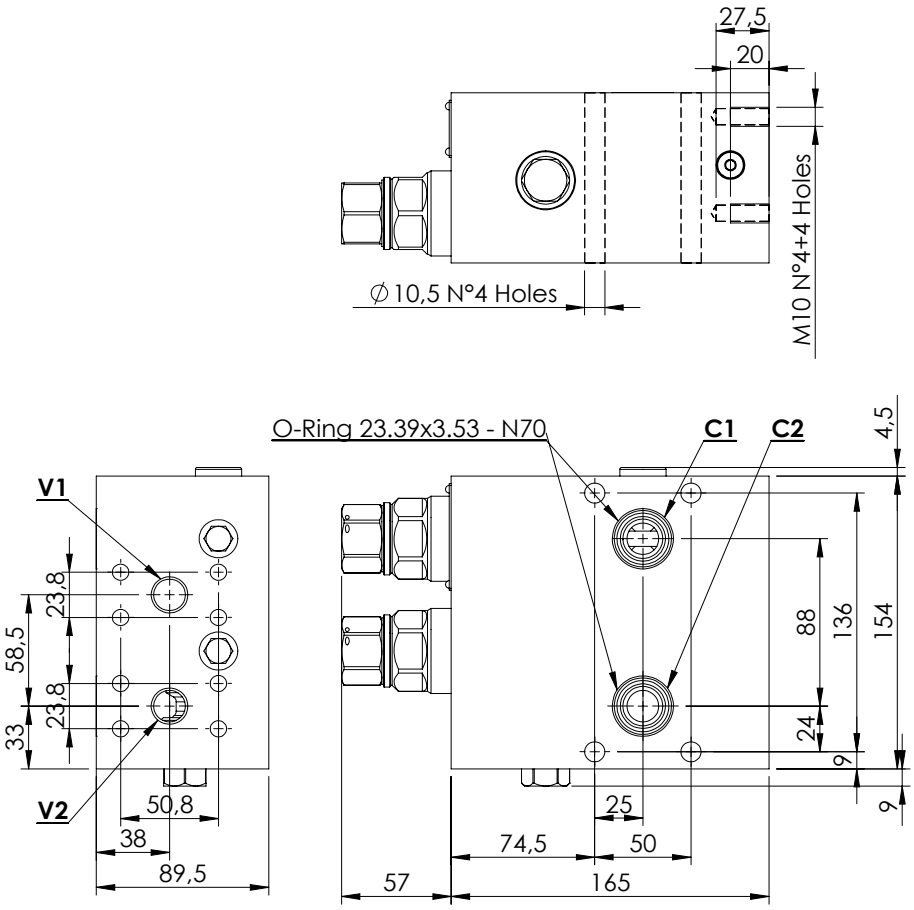

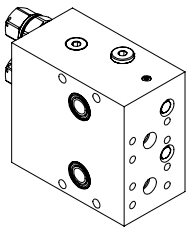

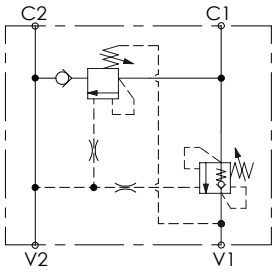

SPECIFICATIONS

Max. operating pressure:	**420 bar**
Rated flow:	**300 l/min**
Manifold:	**Steel**
Weight:	**16,86 kg**

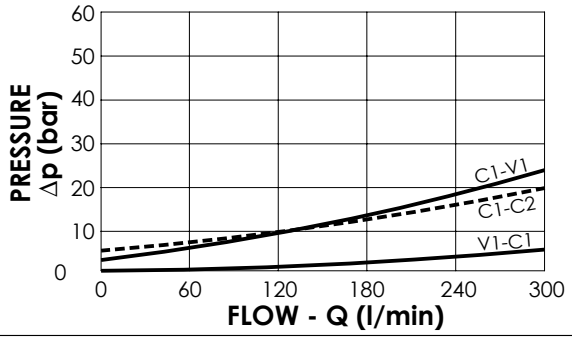

NOTES

Setting: at least 1.3 times the load induced pressure

ORDERING CODES

Quick code	Description	Pilot ratio	Main ports size	Standard setting (bar, Q=5 l/min)	Adjust. range (bar)	Pressure increase (bar/turn)
MB000816	**MRSN-300-ABNV-06-S34-N420**	**6:1**	V1,V2: **3/4" SAE 6000** C1,C2: **Ø16,5**	**250**	**120-360**	**122**

REGENERATIVE VALVE

MRSN-300-ABNE

REGENERATIVE

ATLANTIC Fluid Tech

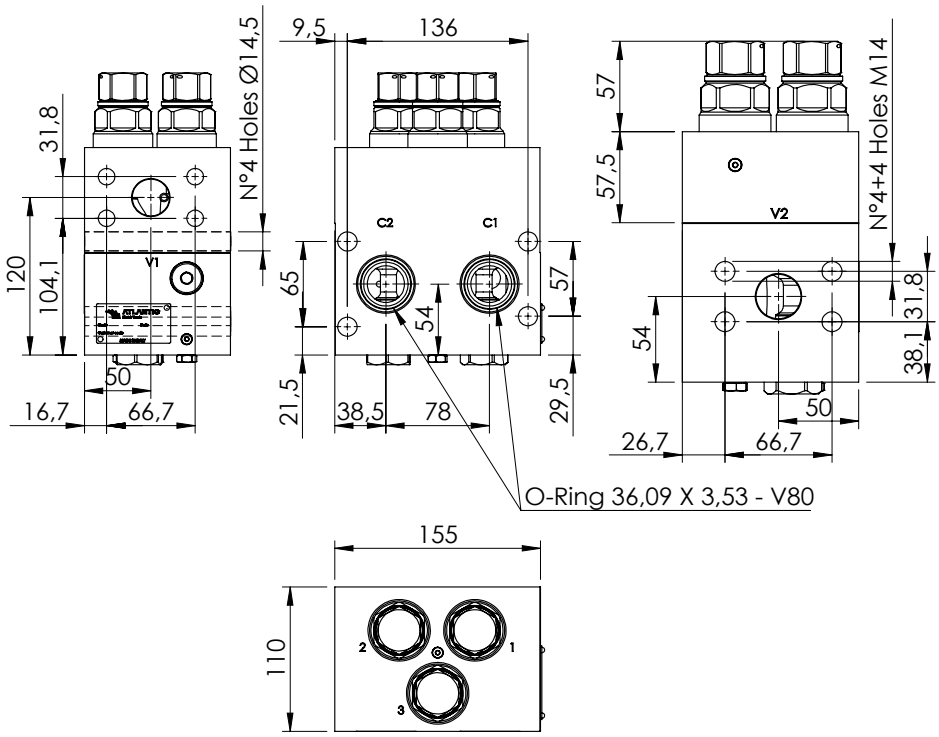

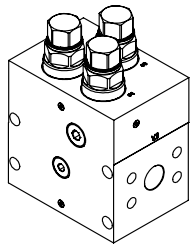

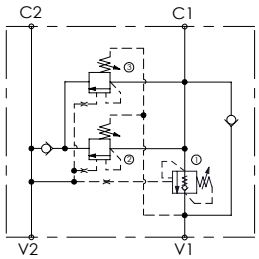

SPECIFICATIONS

Max. operating pressure:	**420 bar**
Rated flow:	**300 l/min**
Manifold:	**Steel**
Weight:	**18,82 kg**

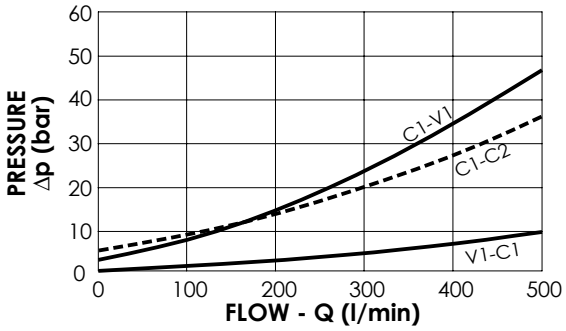

NOTES

Designed for crusher scissors

Valve for heavy duty working cycles with viton seals and reinforced plugs

ORDERING CODES

Quick code	Description	Pilot ratio	Main ports size	Standard setting (bar, Q=5 l/min)	Adjust. range (bar)	Pressure increase (bar/turn)
MB000132	**MRSN-300-ABNE-06-S11-V420**	**6:1**	V1,V2 : **1-1/4 SAE 6000** C1,C2 : **Ø 28**	**250**	**120-360**	**104**

ATLANTIC
Fluid Tech

SECTION 8

Hydraulic Motors, Actuators and Winch Valves

MANAGEMENT SYSTEM CERTIFICATION
DNV·GL
ISO 9001 = ISO 14001
OHSAS 18001

HYDRAULIC MOTOR, ACTUATOR, AND WINCH VALVES

ATLANTIC Fluid Tech

Hydraulic scheme	Valve description	Valve type	Rated flow (l/min)	Max. pressure (bar)	Installation	Main port size or cavity type	Page
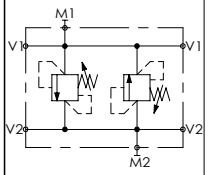	MADN-030-TLNR	Double antishock	30	350	In line	G 3/8"	8.01.**010**
	MADN-030-TLNR	Double antishock	30	350	In line	G 1/2"	8.01.**020**
	MADN-030-TBNR	Double antishock, for SD OMP-OMR	30	210	Flanged	G 1/2"	8.01.**030**
	MADN-080-TLNR	Double antishock	80	350	In line	G 1/2"	8.01.**040**
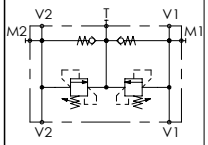	MADN-040-LLNR	Dual cross over and anticavitation relief	40	210	In line	G 1/2"	8.02.**050**
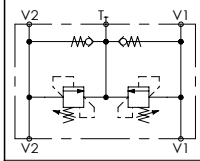	MADN-080-LLNR	Dual cross over and anticavitation relief	80	250	In line	G 3/4"	8.03.**060**
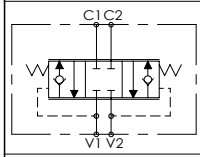	MBDN-055-GLNR	Counterbalance, dual acting	55	350	In line	G 3/8"	8.04.**070**
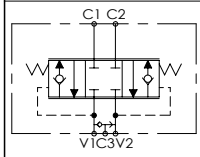	MBDN-055-GLSF	Counterbalance, dual acting, with brake relaese	55	350	In line	G 3/8"	8.05.**080**
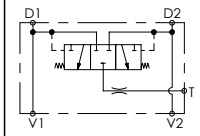	MFLN-150-RFSR	Flushing	150	350	Flanged	Ø13	8.06.**090**
	MFLN-300-RFSR	Flushing	300	350	Flanged	Ø19	8.06.**100**
	MFLN-500-RFSR	Flushing	500	350	Flanged	Ø25	8.06.**110**
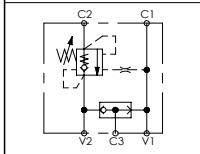	MBSN-060-ZMSF	Single acting, brake release, for SD OMS motor	60	350	Flanged	G 1/2"	8.07.**120**
	MBSN-060-ZMSF	Single acting, brake release, for SD OMP motor	60	350	Flanged	G 1/2"	8.07.**130**
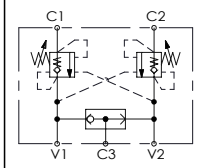	MBDN-060-ALSF	Dual acting, brake release	60	350	In line	G 3/8"	8.08.**140**
	MBDN-060-ALSF	Dual acting, brake release	60	350	In line	G 1/2"	8.08.**150**
	MBDN-060-ZMSF	Dual acting, brake release	60	250	Flanged	Ø9	8.08.**160**
	MBDN-060-ZMNR	Dual acting, brake release	60	210	Flanged	1/2" SAE 6000	8.08.**170**
	MBDN-060-ABSF	Dual acting, brake release	60	350	Flanged	G 1/2"	8.08.**180**
	MBDN-060-LMSF	Dual acting, brake release, for SD OMS motor	60	250	Flanged	G 1/2"	8.08.**190**
	MBDN-060-LMSF	Dual acting, brake release, for SD OMP motor	60	250	Flanged	G 1/2"	8.08.**200**
	MBDN-060-AMSF	Dual acting, brake release, for SAM BR motor	60	250	Flanged	G 1/2"	8.08.**210**
	MBDN-060-AMSF	Dual acting, brake release, for SAM HR motor	60	250	Flanged	G 1/2"	8.08.**220**
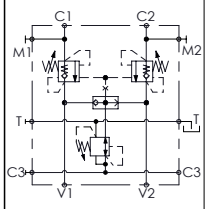	MBDN-060-AMSR	Dual acting, brake release, for BR A2FE 28-32	60	420	Flanged	1/2" SAE 6000	8.09.**230**
	MBDN-100-AMSR	Dual acting, brake release, for BR A2FE 28-32	100	420	Flanged	1/2" SAE 6000	8.09.**240**
	MBDN-150-AMSR	Dual acting, brake release, for BR A2FE 45-56-63	150	420	Flanged	3/4" SAE 6000	8.09.**250**
	MBDN-150-AMSR	Dual acting, brake release, for BR A2FE 80-90	180	420	Flanged	1" SAE 6000	8.09.**260**
	MBDN-300-AMSR	Dual acting, brake release, for BR A2FE 80-90	300	420	Flanged	1" SAE 6000	8.09.**270**
	MBDN-320-AMSR	Dual acting, brake release, for BR A2FE 107-125-160-180	320	420	Flanged	1-1/4" SAE 6000	8.09.**280**

HYDRAULIC MOTOR, ACTUATOR, AND WINCH VALVES

ATLANTIC Fluid Tech

Hydraulic scheme	Valve description	Valve type	Rated flow (l/min)	Max. pressure (bar)	Installation	Main port size or cavity type	Page
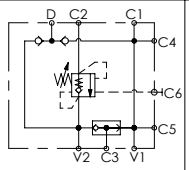	MBSN-100-ZMSF	Single acting for winches, pilot assisted, for SD OMS motor	100	350	Flanged	G 1/2"	8.10.**290**
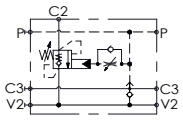	MBSN-250-AMSF	Single acting for winches, brake release	250	500	Flanged	3/4" SAE 6000	8.11.**300**
	MBSN-300-AMSF	Single acting for winches, brake release	300	500	Flanged	1" SAE 6000	8.11.**310**
	MBSN-300-AMSF	Single acting for winches, brake release	300	500	Flanged	1-1/4" SAE 6000	8.11.**320**
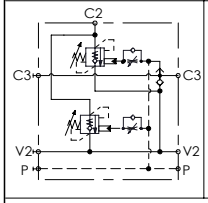	MBDN-500-AMSF	Double acting for winches, brake release	500	500	Flanged	1-1/4" SAE 6000	8.12.**330**

VALVES FOR MOTORS OR HYDRAULIC ACTUATORS

MADN-030-TLNR

DOUBLE ANTISHOCK

ATLANTIC Fluid Tech

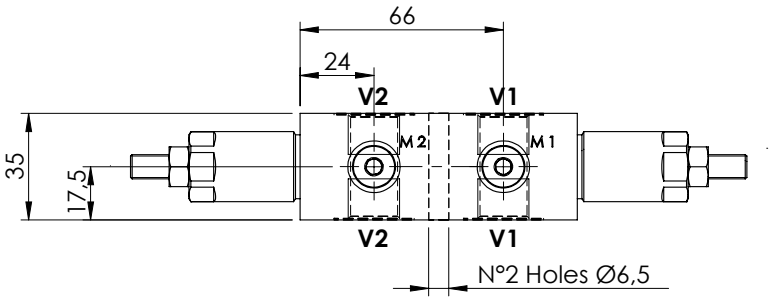

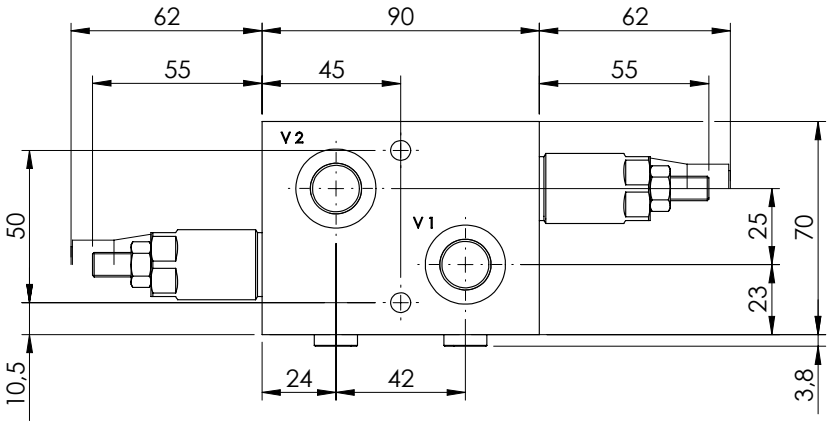

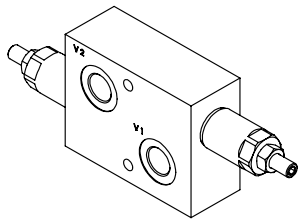

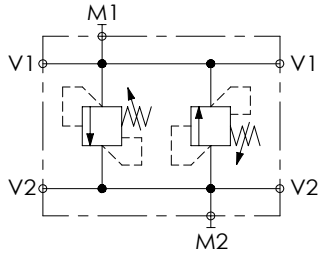

SPECIFICATIONS

Max. operating pressure:	350 bar
Rated flow:	30 l/min
Manifold:	Aluminium
Weight:	0,8 kg

SEALING CAP

Ordering code:
AT000020

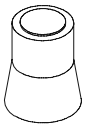

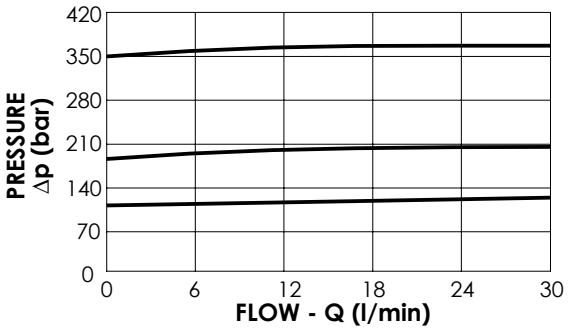

ORDERING CODES

Quick code	Description	Main ports size	Standard setting (bar, Q=5 l/min)	Adjust. range (bar)	Pressure increase (bar/turn)
MA000006	**MADN-030-TLNR-HN-G38-N350**	V1,V2 : **G 3/8"** M1,M2 : **G1/8"**	**350**	**100-350**	**91**
MA000005	**MADN-030-TLNR-HN-G38-N200**	V1,V2 : **G 3/8"** M1,M2 : **G1/8"**	**200**	**50-210**	**42**
MA000004	**MADN-030-TLNR-HN-G38-N100**	V1,V2 : **G 3/8"** M1,M2 : **G1/8"**	**100**	**30-100**	**20**

VALVES FOR MOTORS OR HYDRAULIC ACTUATORS

MADN-030-TLNR

DOUBLE ANTISHOCK

ATLANTIC Fluid Tech

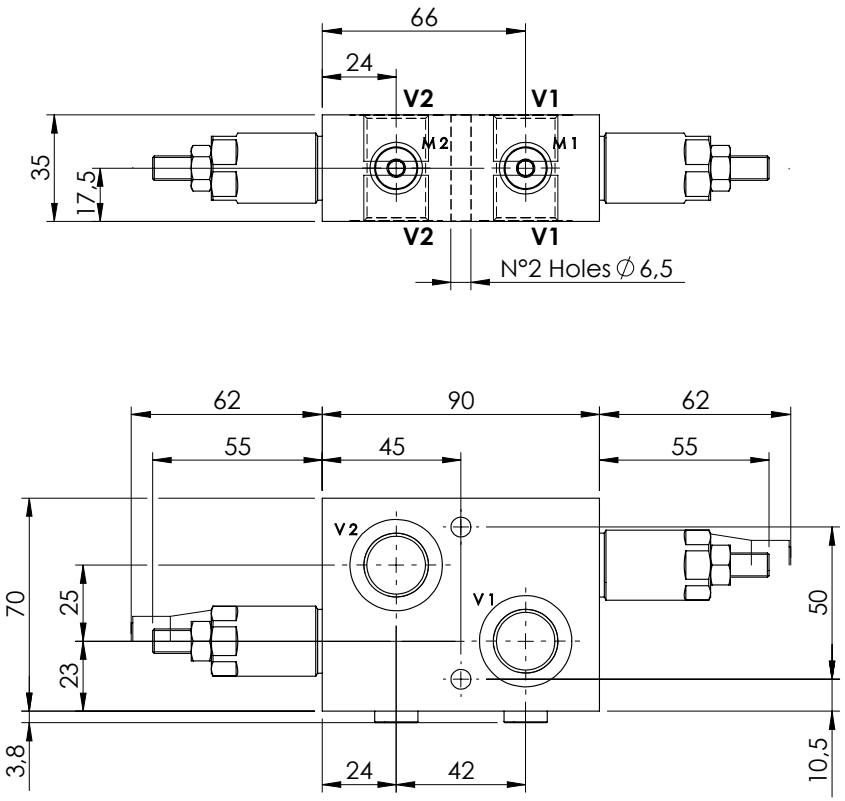

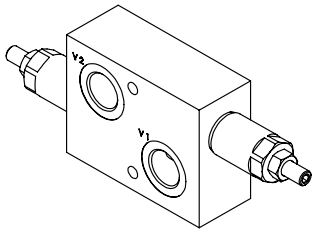

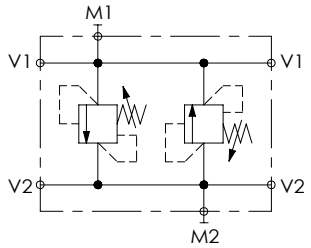

SPECIFICATIONS

Max. operating pressure:	**350 bar**
Rated flow:	**30 l/min**
Manifold:	**Aluminium**
Weight:	**0,8 kg**

SEALING CAP

Ordering code:
AT000020

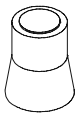

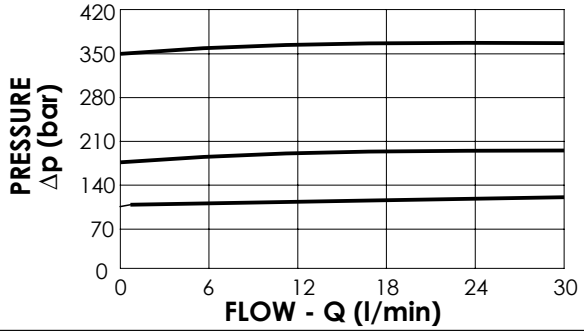

ORDERING CODES

Quick code	Description	Main ports size	Standard setting (bar, Q=5 l/min)	Adjust. range (bar)	Pressure increase (bar/turn)
MA000010	**MADN-030-TLNR-HN-G12-N350**	V1,V2 : **G1/2"** M1,M2 : **G1/8"**	**350**	**100-350**	**91**
MA000007	**MADN-030-TLNR-HN-G12-N200**	V1,V2 : **G1/2"** M1,M2 : **G1/8"**	**200**	**50-210**	**42**
MA000009	**MADN-030-TLNR-HN-G12-N100**	V1,V2 : **G1/2"** M1,M2 : **G1/8"**	**100**	**30-100**	**20**
MA000032	**MADN-030-TLNR-HN-G12-N050**	V1,V2 : **G1/2"** M1,M2 : **G1/8"**	**50**	**10- 50**	**10**

VALVES FOR MOTORS OR HYDRAULIC ACTUATORS

MADN-030-TBNR

DOUBLE ANTISHOCK

ATLANTIC Fluid Tech

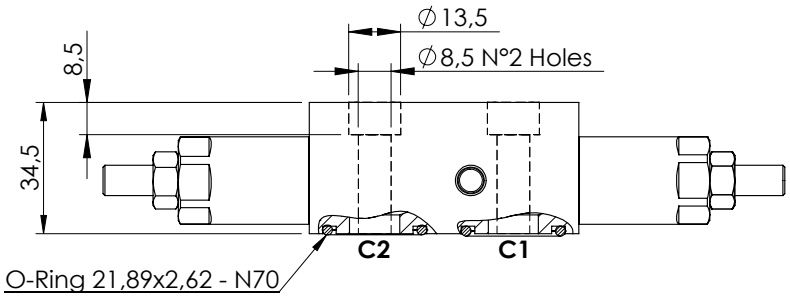

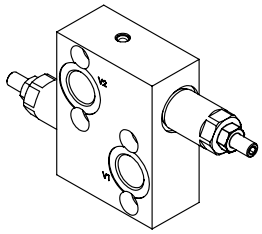

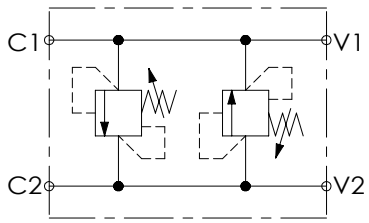

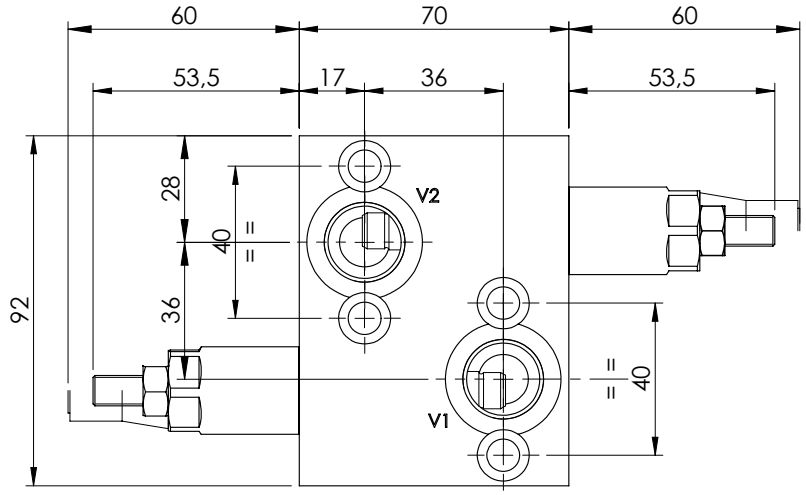

SPECIFICATIONS

Max. operating pressure:	210 bar
Rated flow:	30 l/min
Manifold:	Aluminium
Weight:	0,76 kg

SEALING CAP

Ordering code:

AT000020

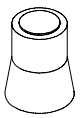

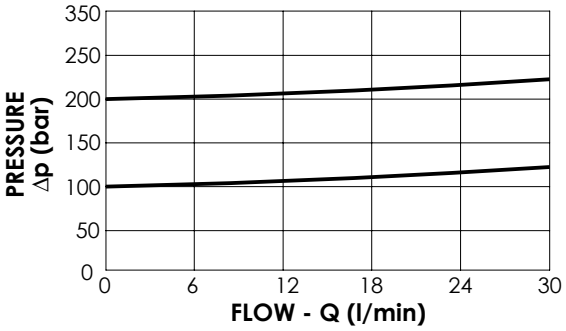

NOTES

Setting: at least 1.3 times the load induced pressure

Designed for DANFOSS motors OMP-OMR series.

ORDERING CODES

Quick code	Description	Main ports size	Standard setting (bar, Q=5 l/min)	Adjust. range (bar)	Pressure increase (bar/turn)
MA000012	**MADN-030-TBNR-HN-G12-N210**	V1,V2: **G 1/2"** C1,C2: **Ø 13**	**200**	**50-210**	**42**
MA000022	**MADN-030-TBNR-HN-G12-N100**	V1,V2: **G 1/2"** C1,C2: **Ø 13**	**100**	**30-100**	**20**

VALVES FOR MOTORS OR HYDRAULIC ACTUATORS

MADN-080-TLNR

DOUBLE ANTISHOCK

ATLANTIC Fluid Tech

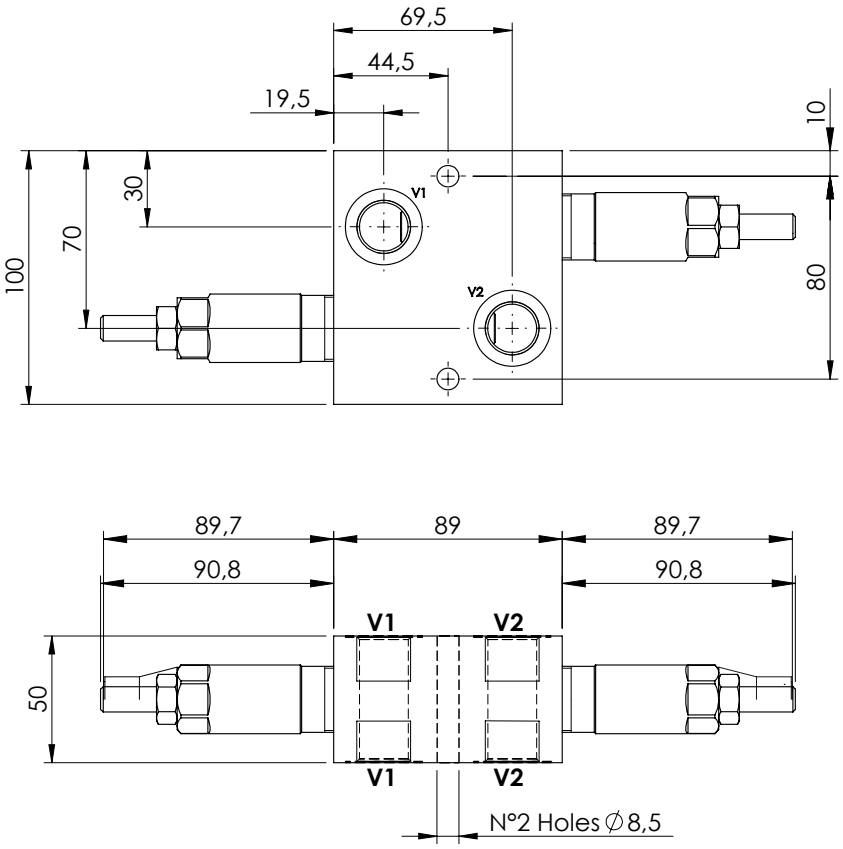

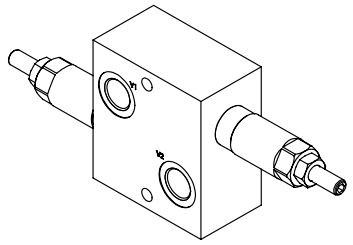

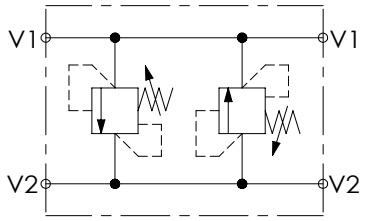

SPECIFICATIONS

Max. operating pressure:	350 bar
Rated flow:	80 l/min
Manifold:	Aluminium
Weight:	1,62 kg

SEALING CAP

Ordering code:
AT000021

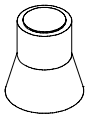

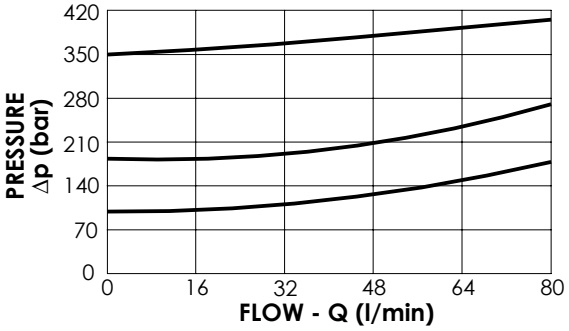

ORDERING CODES

Quick code	Description	Main ports size	Standard setting (bar, Q=5 l/min)	Adjust. range (bar)	Pressure increase (bar/turn)
MA000026	**MADN-080-TLNR-HN-G12-N350**	V1,V2 : **G 1/2"**	**350**	**100-350**	**42**
MA000025	**MADN-080-TLNR-HN-G12-N200**	V1,V2 : **G 1/2"**	**200**	**60-210**	**24**
MA000021	**MADN-080-TLNR-HN-G12-N100**	V1,V2 : **G 1/2"**	**100**	**25-100**	**13**

VALVES FOR MOTORS OR HYDRAULIC ACTUATORS

MADN-040-LLNR

DUAL CROSS OVER ANTICAVITATION RELIEF

ATLANTIC Fluid Tech

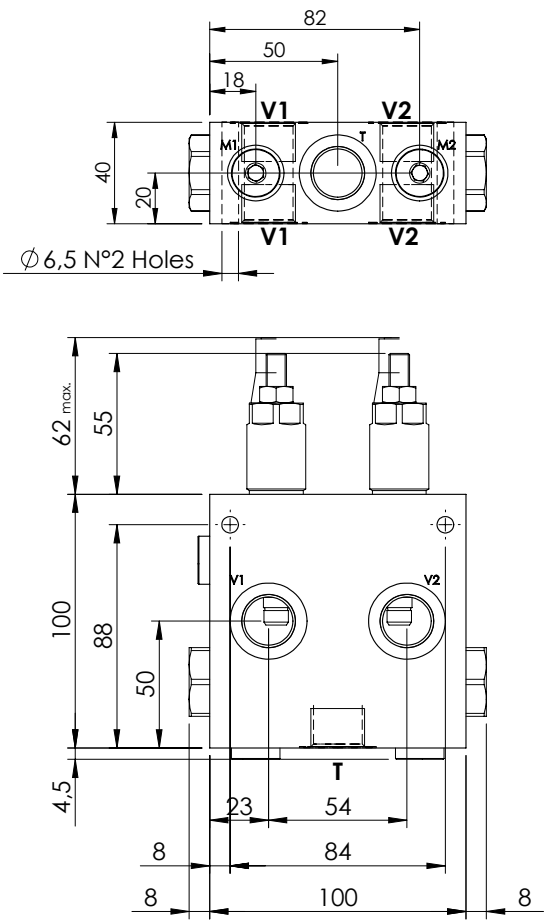

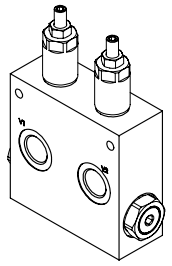

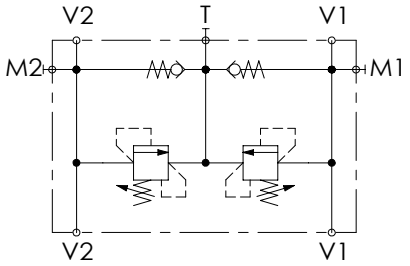

SPECIFICATIONS

Max. operating pressure:	210 bar
Rated flow:	40 l/min
Manifold:	Aluminium
Weight:	1,37 kg

SEALING CAP

Ordering code:
AT000020

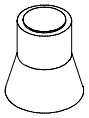

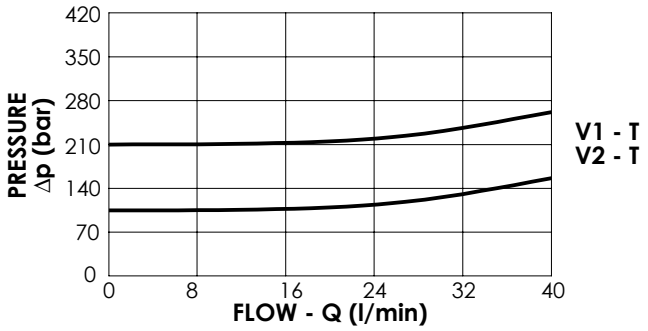

NOTES

Setting: at least 1.3 times the load induced pressure

ORDERING CODES

Quick code	Description	Main ports size	Standard setting (bar, Q=5 l/min)	Adjust. range (bar)	Pressure increase (bar/turn)
MA000054	MADN-040-LLNR-HN-G12-N200	V1,V2,T: **G1/2"** M1,M2: **G1/4"**	200	50-210	42
MA000055	MADN-040-LLNR-HN-G12-N100	V1,V2,T: **G1/2"** M1,M2: **G1/4"**	100	30-100	20

VALVES FOR MOTORS OR HYDRAULIC ACTUATORS

MADN-080-LLNR

DUAL CROSS OVER ANTICAVITATION RELIEF

ATLANTIC Fluid Tech

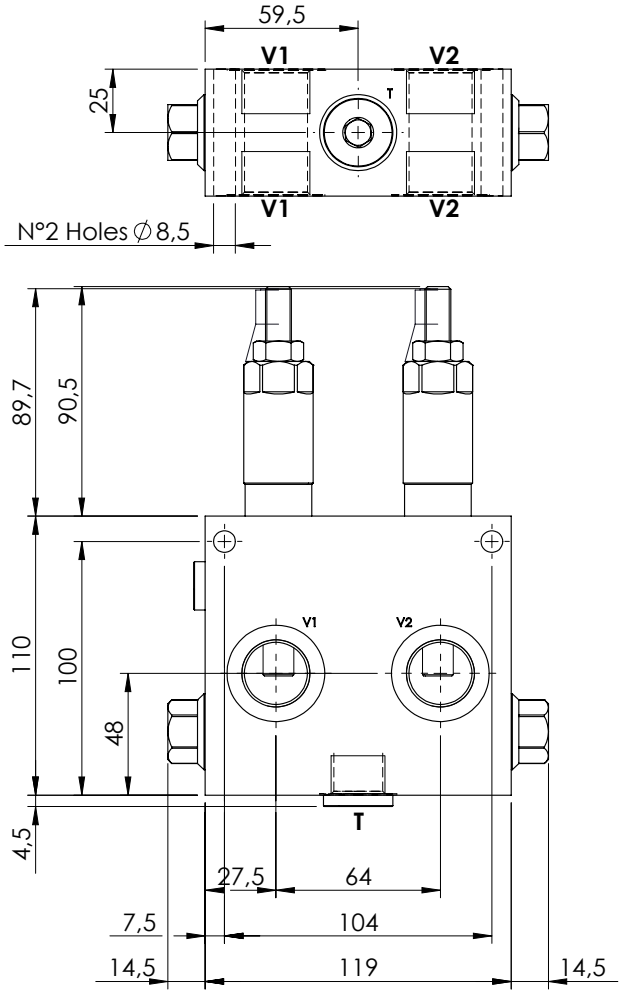

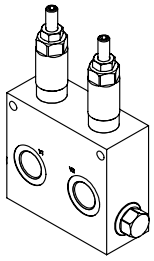

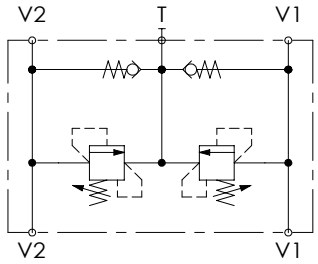

SPECIFICATIONS

Max. operating pressure:	250 bar
Rated flow:	80 l/min
Manifold:	Aluminium
Weight:	2,28 kg

SEALING CAP

Ordering code:
AT000021

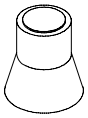

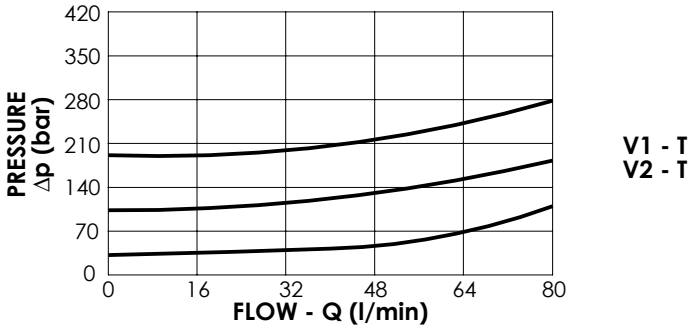

NOTES

Setting: at least 1.3 times the load induced pressure

ORDERING CODES

Quick code	Description	Main ports size	Standard setting (bar, Q=5 l/min)	Adjust. range (bar)	Pressure increase (bar/turn)
MA000018	MADN-080-LLNR-HN-G34-N200	V1,V2: G3/4" T: G1/2"	200	60-210	24
MA000023	MADN-080-LLNR-HN-G34-N100	V1,V2: G3/4" T: G1/2"	100	25-100	13
MA000024	MADN-080-LLNR-HN-G34-N050	V1,V2: G3/4" T: G1/2"	50	5-50	9

VALVES FOR MOTORS

MBDN-055-GLNR

COUNTERBALANCE

ATLANTIC Fluid Tech

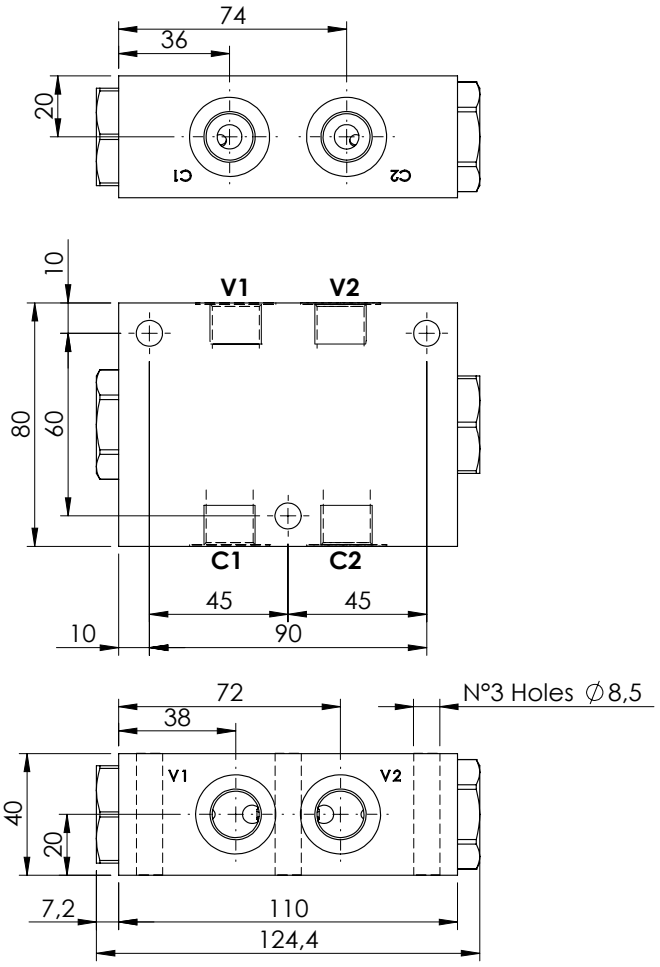

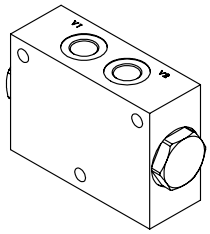

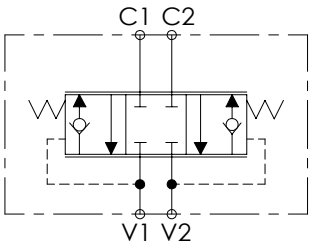

SPECIFICATIONS

Max. operating pressure:	**350 bar**
Rated flow:	**55 l/min**
Manifold:	**Cast iron**
Weight:	**2,53 kg**

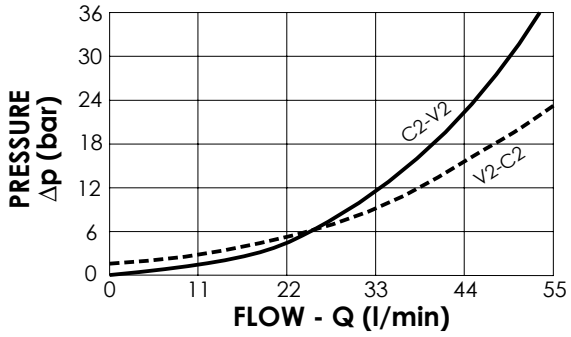

NOTES

Designed for traction control of small undercarriages

ORDERING CODES

Quick code	Description	Main ports size	Standard setting (bar, Q=5 l/min)	Adjust. range (bar)	Pressure increase (bar/turn)
MB000112	**MBDN-055-GLNR-01-G38-N006**	V1,V2,C1,C2 : **G3/8"**	**6**	**Fixed setting**	**NO**

VALVES FOR MOTORS

MBDN-055-GLSF

COUNTERBALANCE WITH BRAKE RELEASE

ATLANTIC Fluid Tech

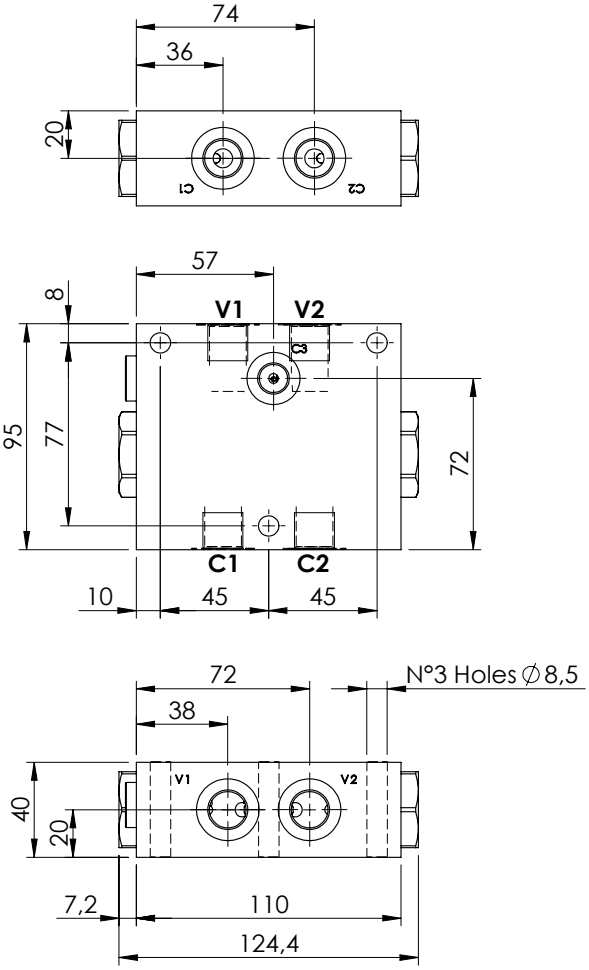

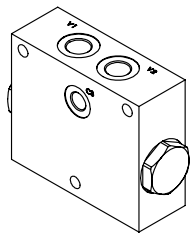

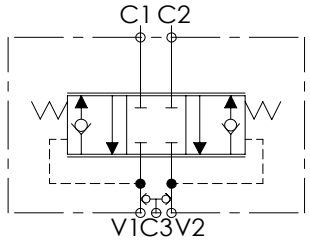

SPECIFICATIONS

Max. operating pressure:	**350 bar**
Rated flow:	**55 l/min**
Manifold:	**Cast iron**
Weight:	**3,08 kg**

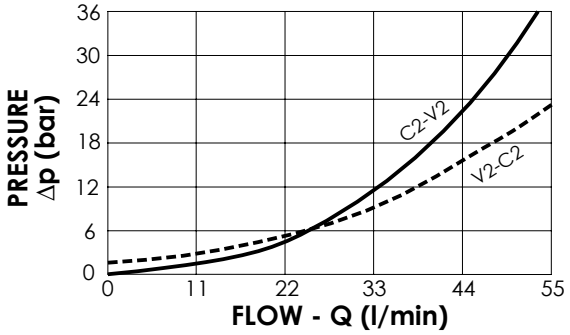

NOTES

Setting: at least 1.3 times the load induced pressure

Designed for traction control of small undercarriages

ORDERING CODES

Quick code	Description	Main ports size	Standard setting (bar, Q=5 l/min)	Adjust. range (bar)	Pressure increase (bar/turn)
MB000232	**MBDN-055-GLSF-01-G38-N006**	V1,V2,C1,C2 : **G3/8"** C3 : **G1/4"**	**6**	**Fixed setting**	**NO**

VALVES FOR MOTORS

MFLN-150-RFSR

FLUSHING VALVE FLANGEABLE TYPE

ATLANTIC Fluid Tech

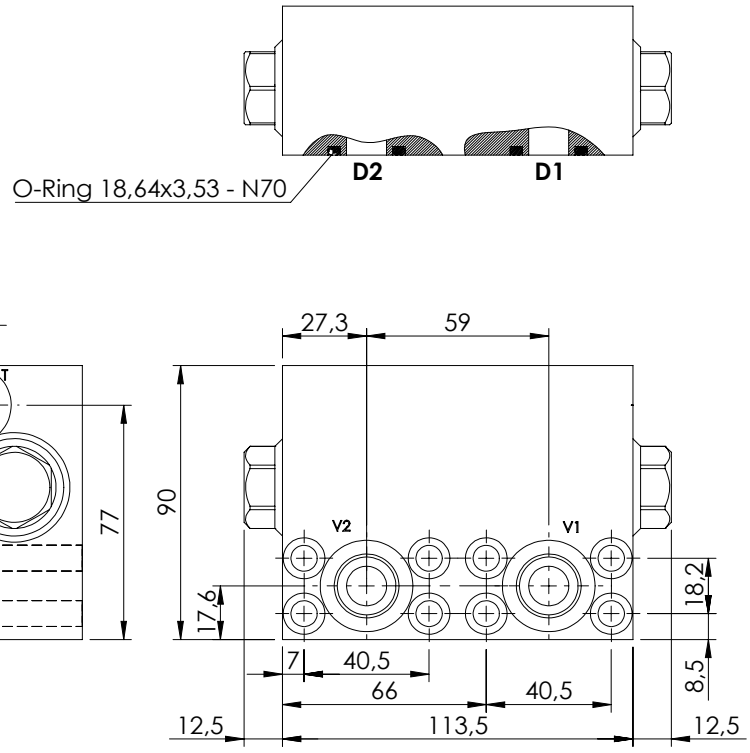

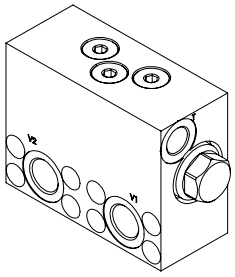

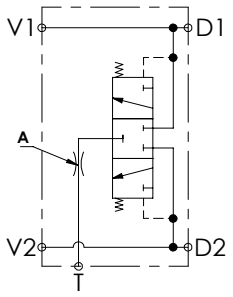

SPECIFICATIONS

Max. operating pressure:	**420 bar**
Rated flow:	**150 l/min**
Manifold:	**Steel**
Weight:	**3,38 kg**

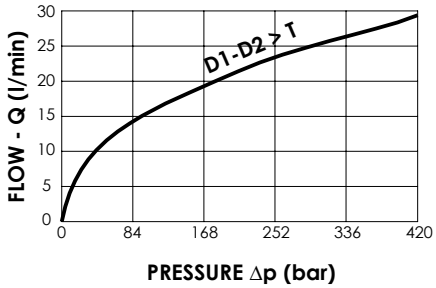

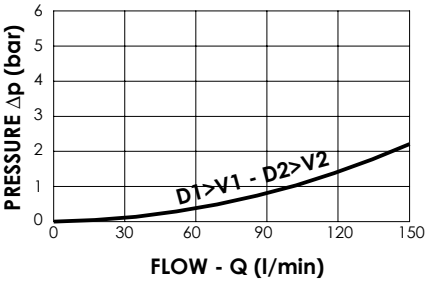

ORDERING CODES

Quick code	Description	Main ports size	Spool setting (bar)	A Orifice Ø	
MF000111	**MFLN-150-RFSR-08-S12-N420**	V1,V2:**G1/2"** D1,D2:**1/2"SAE 6000** T: **G3/8"**	**6**	**1,7**	

VALVES FOR MOTORS

MFLN-300-RFSR

FLUSHING VALVE FLANGEABLE TYPE

ATLANTIC Fluid Tech

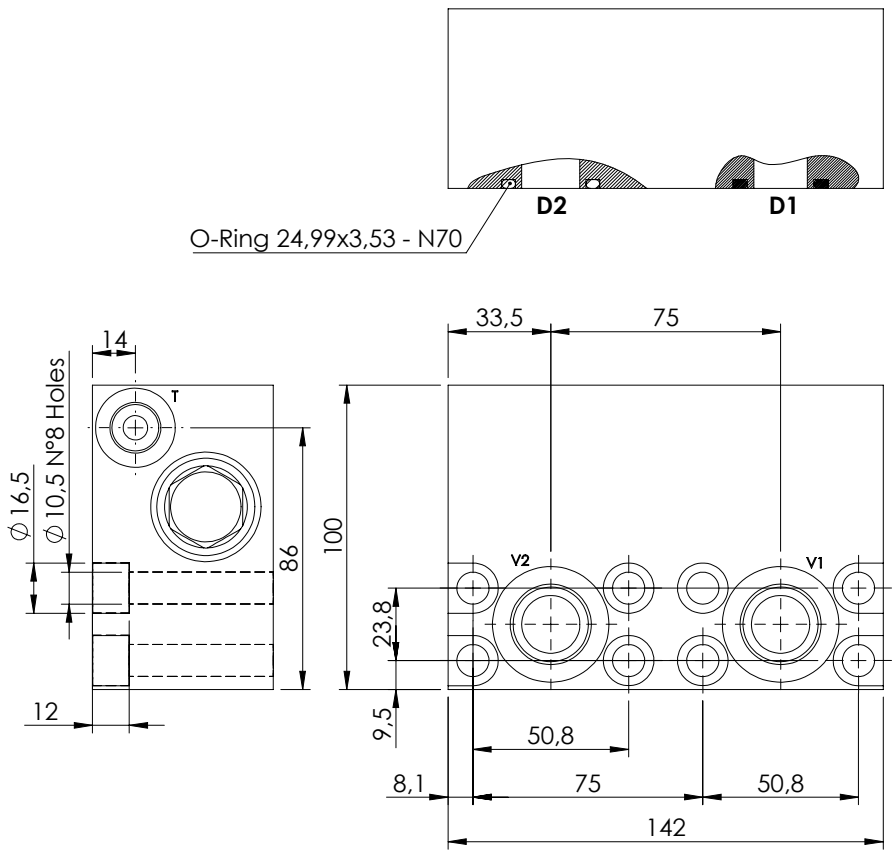

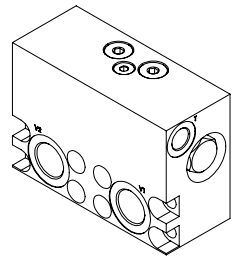

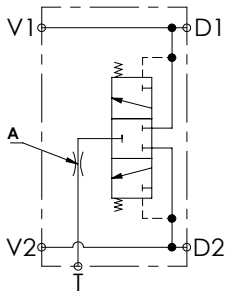

SPECIFICATIONS

Max. operating pressure:	**420 bar**
Rated flow:	**200 l/min**
Manifold:	**Steel**
Weight:	**3,38 kg**

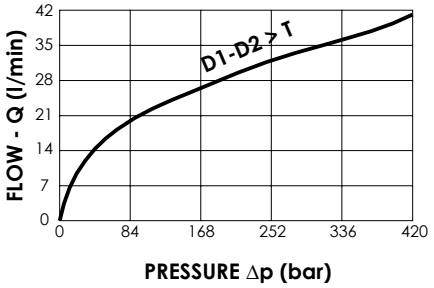

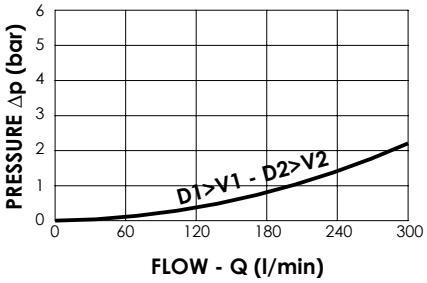

ORDERING CODES

Quick code	Description	Main ports size	Spool setting (bar)	A Orifice Ø	
MF000110	**MFLN-200-RFSR-09-S34-N420**	V1,V2:**G3/4"** D1,D2:**3/4"SAE 6000** T: **G3/8"**	**6**	**1,9**	

VALVES FOR MOTORS

MFLN-500-RFSR

FLUSHING VALVE FLANGEABLE TYPE

ATLANTIC Fluid Tech

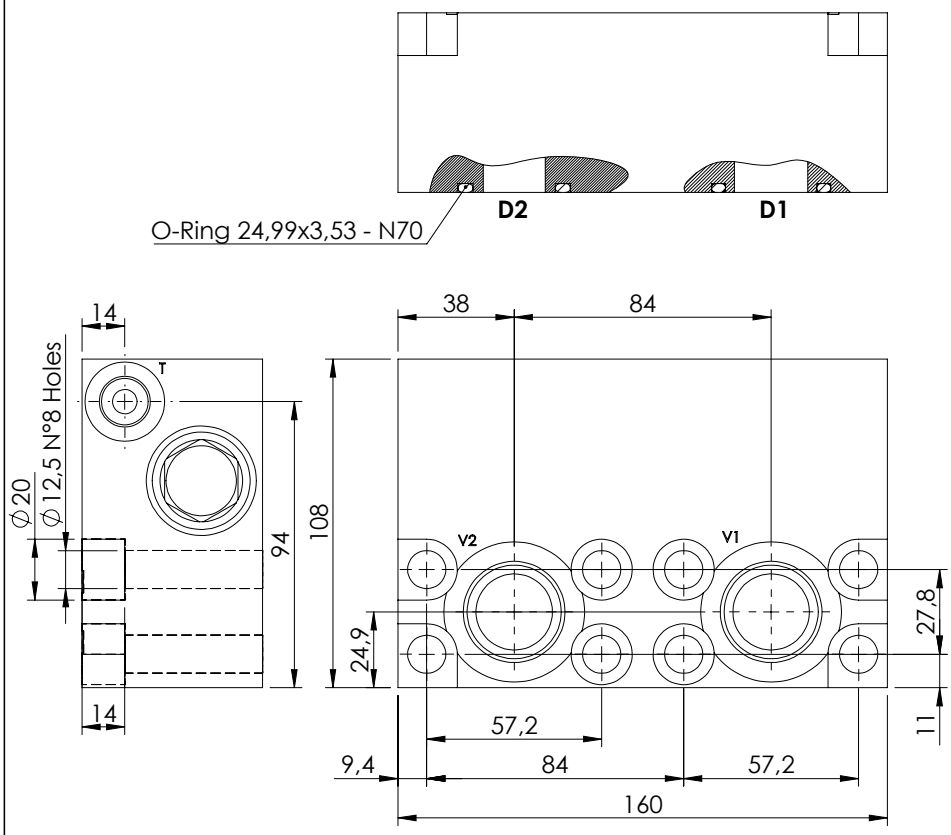

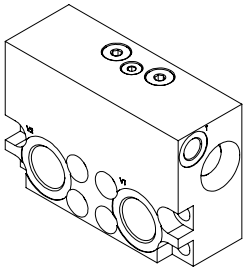

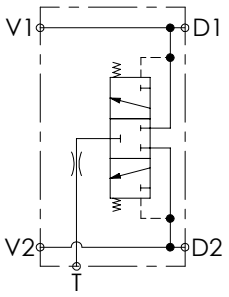

SPECIFICATIONS

Max. operating pressure:	**420 bar**
Rated flow:	**500 l/min**
Manifold:	**Steel**
Weight:	**3,38 kg**

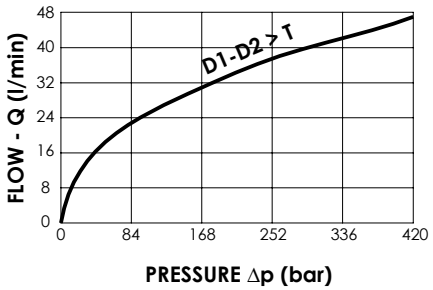

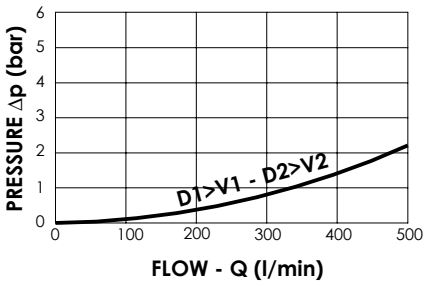

ORDERING CODES

Quick code	Description	Main ports size	Spool setting (bar)	A Orifice Ø	
MF000109	**MFLN-500-RFSR-13-S10-N420**	V1,V2: **G1"** D1,D2: **1" SAE 6000** T: **G3/8"**	**6**	**2,1**	

VALVES FOR MOTORS

MBSN-060-ZMSF

OVERCENTRE WITH BRAKE RELEASE

ATLANTIC Fluid Tech

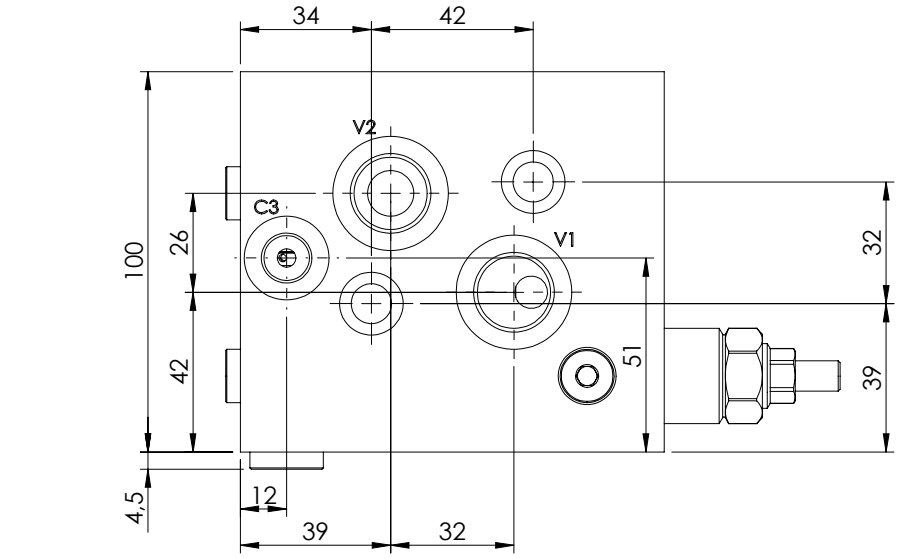

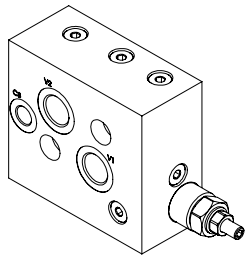

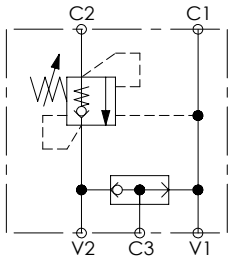

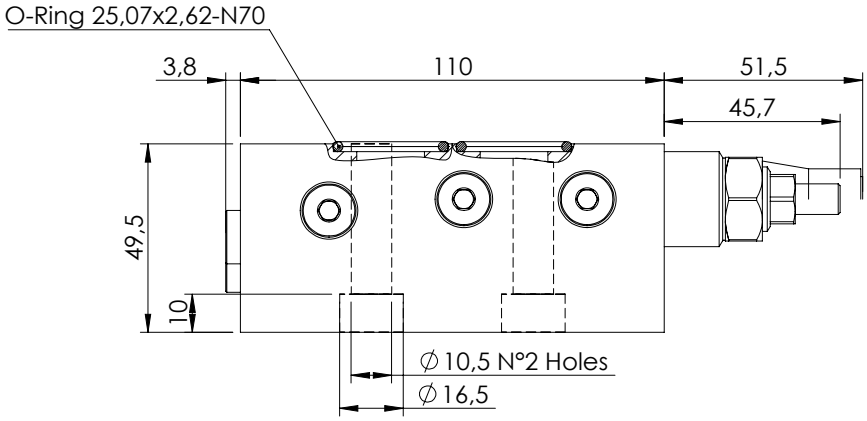

SPECIFICATIONS

Max. operating pressure:	**350 bar**
Rated flow:	**60 l/min**
Manifold:	**Aluminium**
Weight:	**1,5 kg**

SEALING CAP

Ordering code:

AT000020

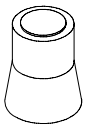

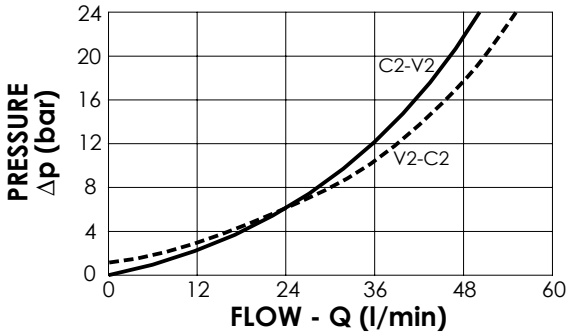

NOTES

Setting: at least 1.3 times the load induced pressure

Designed for DANFOSS motors OMS series

ORDERING CODES

Quick code	Description	Pilot ratio	Main ports size	Standard setting (bar, Q=5 l/min)	Adjust. range (bar)	Pressure increase (bar/turn)
MB001036	**MBSN-060-ZMSF-04-G12-N350-NOMS**	**4,2:1**	V1,V2: **G1/2"** C1,C2: **OMS flange** C3: **G 1/4"**	**350**	**100-350**	**139**
MB001058	**MBSN-060-ZMSF-04-G12-N200-NOMS**	**4,2:1**	V1,V2: **G1/2"** C1,C2: **OMS flange** C3: **G 1/4"**	**200**	**60-210**	**62**

VALVES FOR MOTORS

MBSN-060-ZMSF

OVERCENTRE WITH BRAKE RELEASE

ATLANTIC Fluid Tech

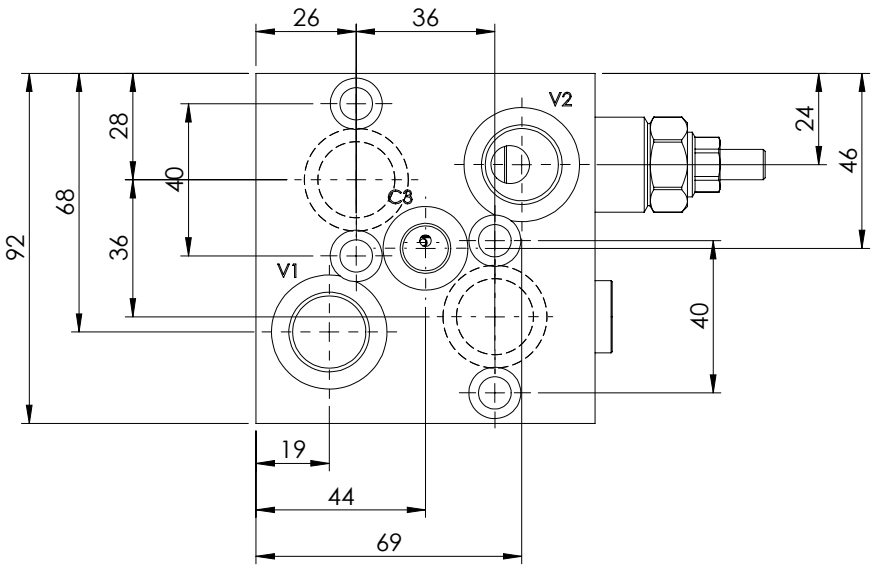

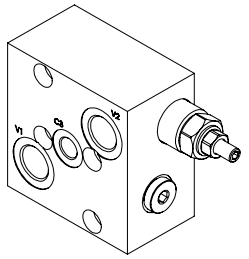

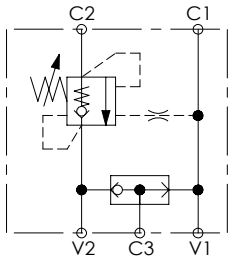

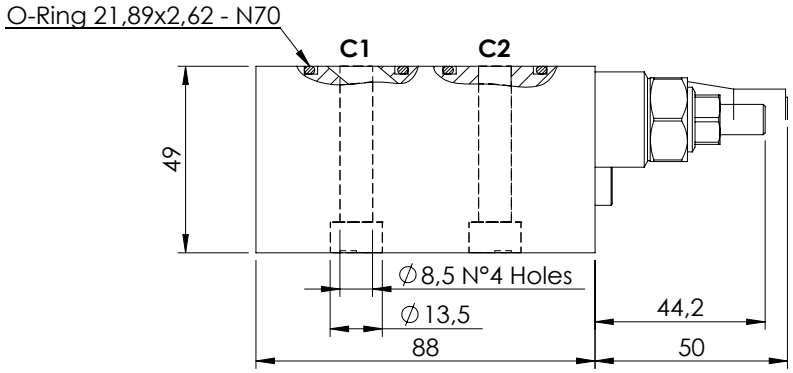

SPECIFICATIONS

Max. operating pressure:	350 bar
Rated flow:	60 l/min
Manifold:	Aluminium
Weight:	1,09 kg

SEALING CAP

Ordering code:

AT000020

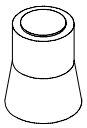

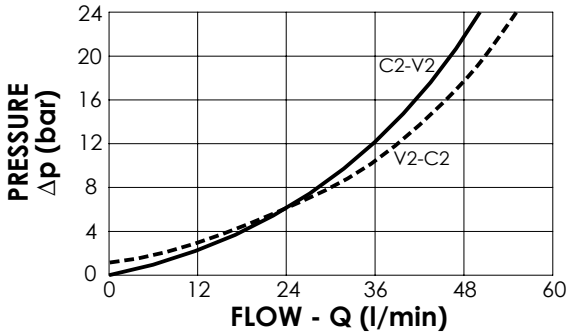

NOTES

Setting: at least 1.3 times the load induced pressure

Designed for DANFOSS motors OMP-OMR series

ORDERING CODES

Quick code	Description	Pilot ratio	Main ports size	Standard setting (bar, Q=5 l/min)	Adjust. range (bar)	Pressure increase (bar/turn)
MB000796	**MBSN-060-ZMSF-04-G12-N350-NOMP**	**4,2:1**	V1,V2: **G1/2"** C1,C2: **OMP flange** C3: **G 1/4"**	**350**	**100-350**	**139**
MB000795	**MBSN-060-ZMSF-04-G12-N200-NOMP**	**4,2:1**	V1,V2: **G1/2"** C1,C2: **OMP flange** C3: **G 1/4"**	**200**	**60-210**	**62**

VALVES FOR MOTORS

MBDN-060-ALSF

DOUBLE ACTING WITH BRAKE RELEASE

ATLANTIC Fluid Tech

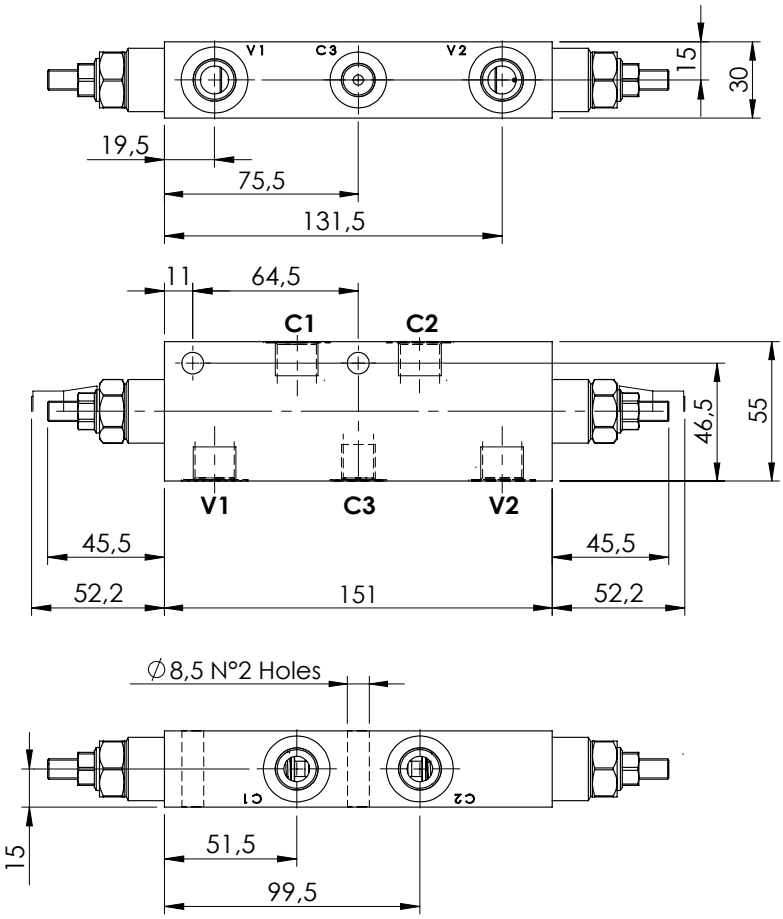

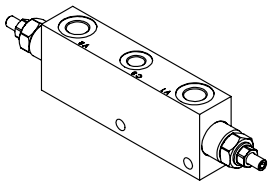

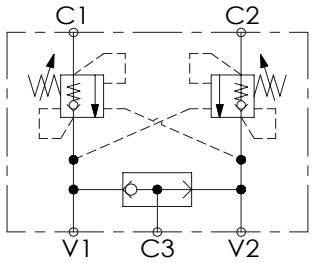

SPECIFICATIONS

Max. operating pressure:	**350 bar**
Rated flow:	**60 l/min**
Manifold:	**Steel**
Weight:	**1,89 kg**

SEALING CAP

Ordering code:
AT000020

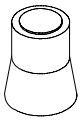

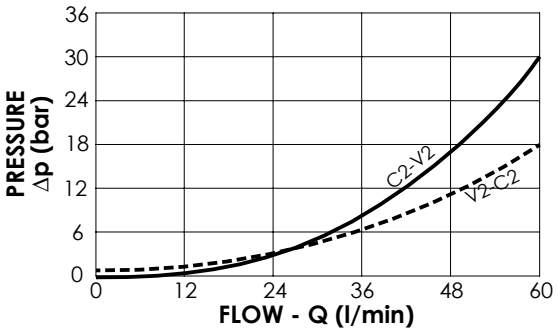

NOTES

Setting: at least 1.3 times the load induced pressure

ORDERING CODES

Quick code	Description	Pilot ratio	Main ports size	Standard setting (bar, Q=5 l/min)	Adjust. range (bar)	Pressure increase (bar/turn)
MB000528	**MBDN-060-ALSF-04-G38-N350**	**4,2:1**	V1,V2: **G3/8"** C1,C2: **G3/8"** C3:**G1/4"**	**350**	**100-350**	**138**
MB000529	**MBDN-060-ALSF-04-G38-N200**	**4,2:1**	V1,V2: **G3/8"** C1,C2: **G3/8"** C3:**G1/4"**	**200**	**60-210**	**62**
MB000704	**MBDN-060-ALSF-11-G38-N250**	**11:1**	V1,V2: **G3/8"** C1,C2: **G3/8"** C3:**G1/4"**	**250**	**60-250**	**56**

VALVES FOR MOTORS

MBDN-060-ALSF

DOUBLE ACTING WITH BRAKE RELEASE

ATLANTIC Fluid Tech

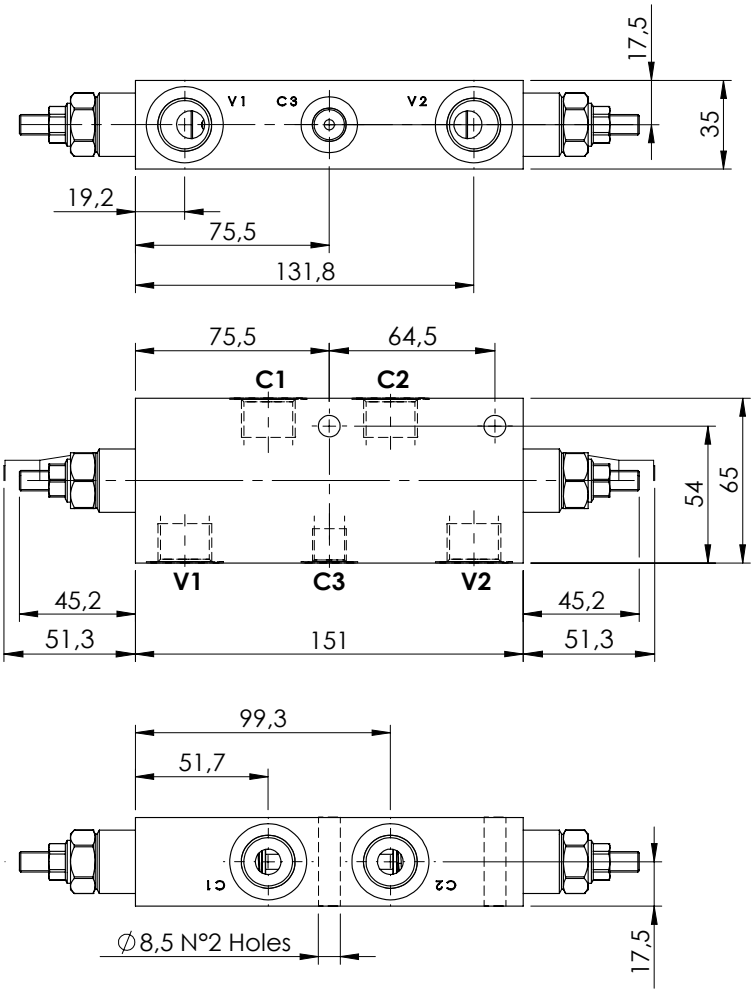

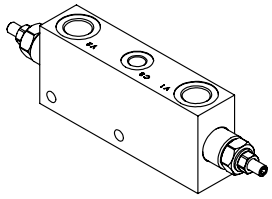

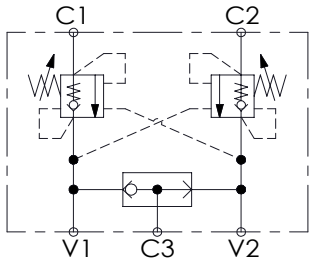

SPECIFICATIONS

Max. operating pressure:	**350 bar**
Rated flow:	**60 l/min**
Manifold:	**Steel**
Weight:	**2,53 kg**

SEALING CAP

Ordering code:
AT000020

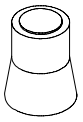

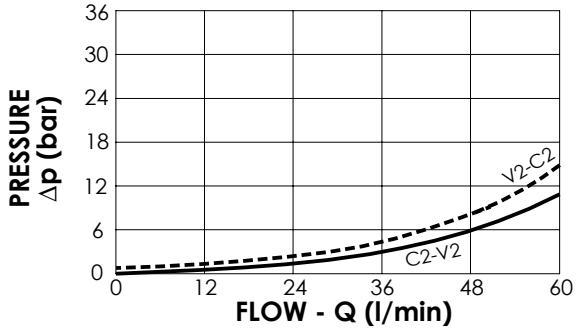

NOTES

Setting: at least 1.3 times the load induced pressure

ORDERING CODES

Quick code	Description	Pilot ratio	Main ports size	Standard setting (bar, Q=5 l/min)	Adjust. range (bar)	Pressure increase (bar/turn)
MB000021	**MBDN-060-ALSF-11-G12-N350**	**11:1**	V1,V2: **G1/2"** C1,C2: **G1/2"** C3:**G1/4"**	**350**	**100-350**	**161**
MB000465	**MBDN-060-ALSF-11-G12-N250**	**11:1**	V1,V2: **G1/2"** C1,C2: **G1/2"** C3:**G1/4"**	**250**	**60-250**	**69**
MB000466	**MBDN-060-ALSF-04-G12-N350**	**4,2:1**	V1,V2: **G1/2"** C1,C2: **G1/2"** C3:**G1/4"**	**350**	**100-350**	**139**
MB000363	**MBDN-060-ALSF-04-G12-N200**	**4,2:1**	V1,V2: **G1/2"** C1,C2: **G1/2"** C3:**G1/4"**	**200**	**60-210**	**62**

VALVES FOR MOTORS

MBDN-060-ZMSF

DOUBLE ACTING WITH BRAKE RELEASE

ATLANTIC Fluid Tech

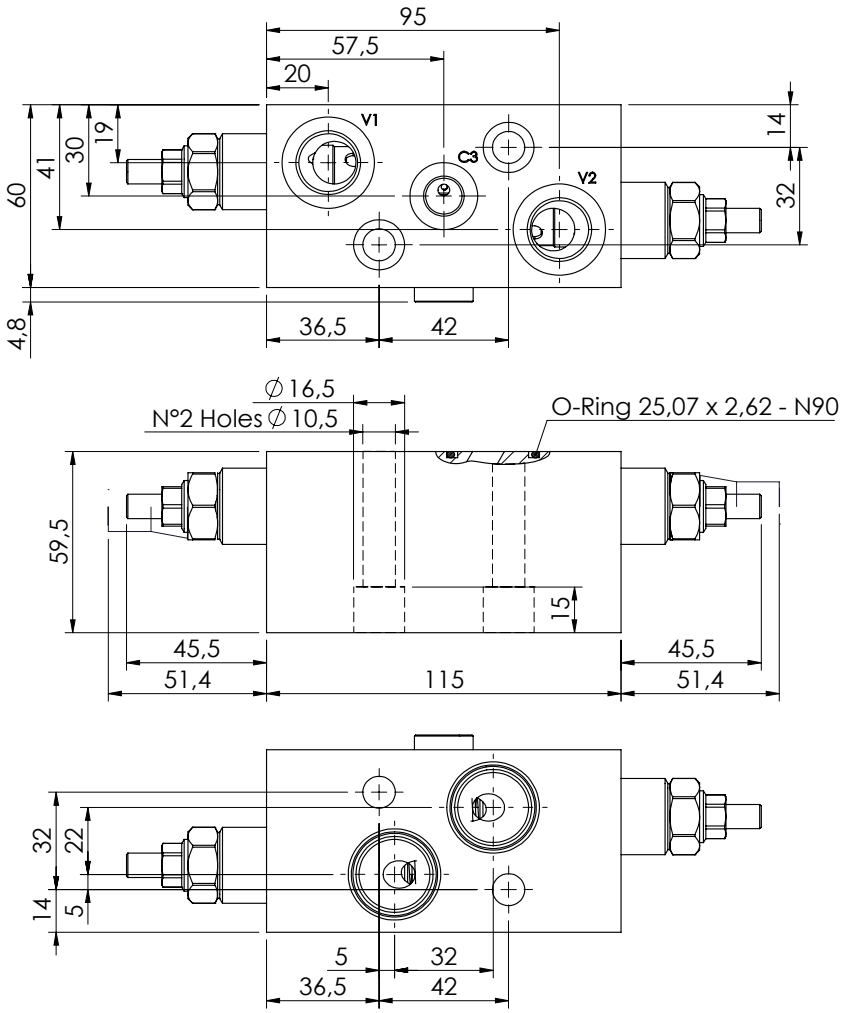

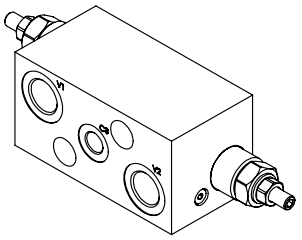

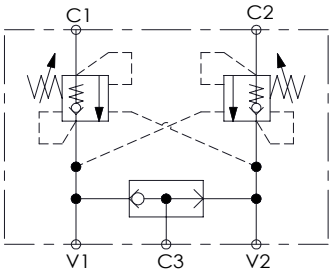

SPECIFICATIONS

Max. operating pressure:	250 bar
Rated flow:	60 l/min
Manifold:	Aluminium
Weight:	1,25 kg

SEALING CAP

Ordering code:
AT000020

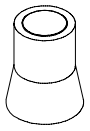

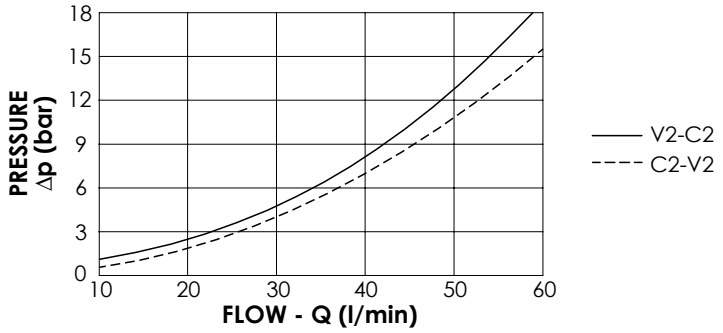

NOTES

Designed for OMS motors

ORDERING CODES

Quick code	Description	Pilot ratio	Main ports size	Standard setting (bar, Q=5 l/min)	Adjust. range (bar)	Pressure increase (bar/turn)
MB000908	**MBDN-060-LMSF-11-G12-N250**	**11:1**	V1,V2: **G1/2"** C1,C2:**Ø9** C3:**G1/4"**	**250**	**100-420**	**69**

VALVES FOR MOTORS

MBDN-060-ZMNR

OVERCENTRE WITH BRAKE RELEASE

ATLANTIC Fluid Tech

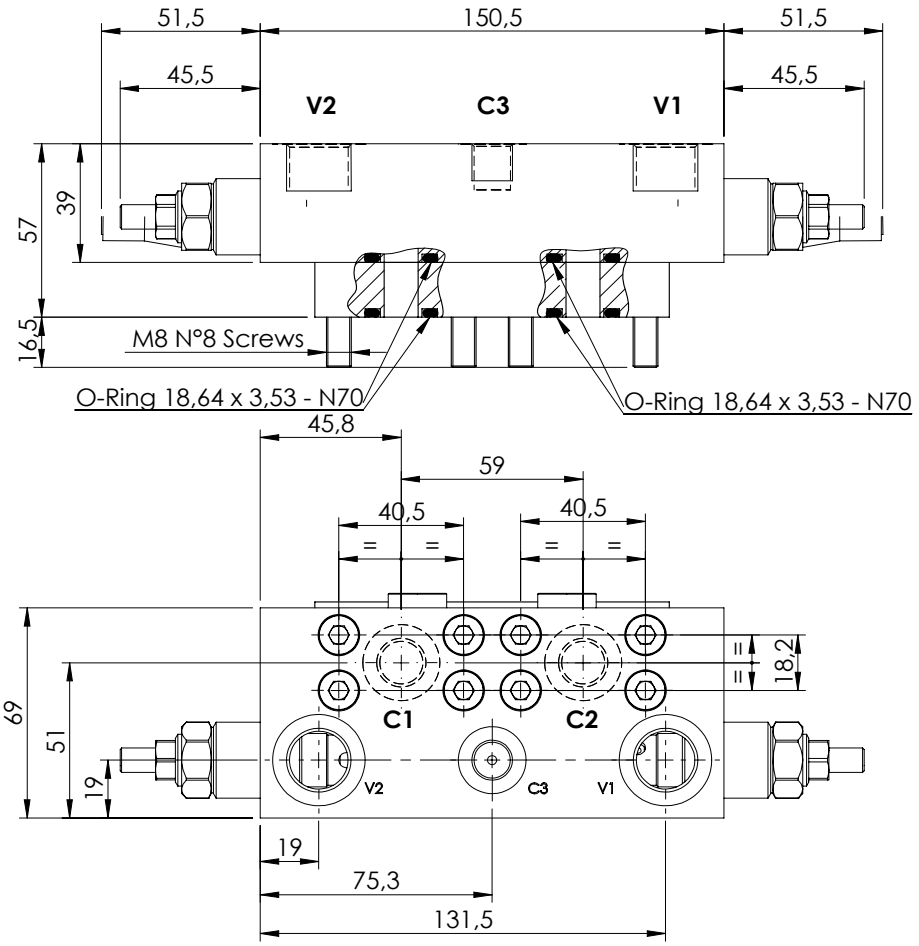

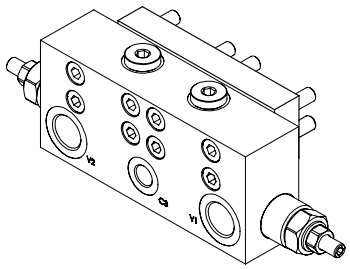

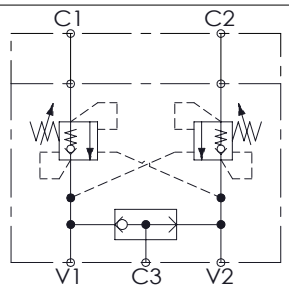

SPECIFICATIONS

Max. operating pressure:	250 bar
Rated flow:	60 l/min
Manifold:	Anodized Aluminium
Weight:	2 kg

SEALING CAP

Ordering code:
AT000020

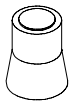

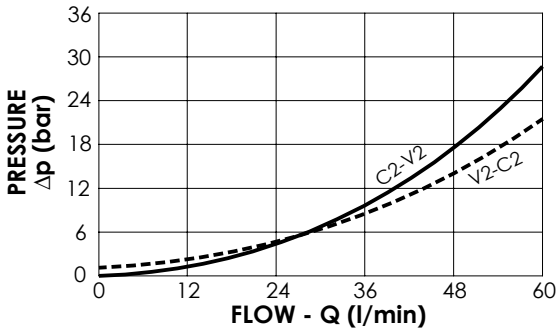

NOTES

Setting: at least 1.3 times the load induced pressure

ORDERING CODES

Quick code	Description	Pilot ratio	Main ports size	Standard setting (bar, Q=5 l/min)	Adjust. range (bar)	Pressure increase (bar/turn)
MB000195	**MBDN-060-ZMNR-11-G12-N250**	**11:1**	V1,V2: **G 1/2"** C3: **G 1/4"** C1,C2: **1/2" SAE 6000**	**250**	**60-250**	**69**

VALVES FOR MOTORS

MBDN-060-ABSF

DOUBLE ACTING WITH BRAKE RELEASE

ATLANTIC Fluid Tech

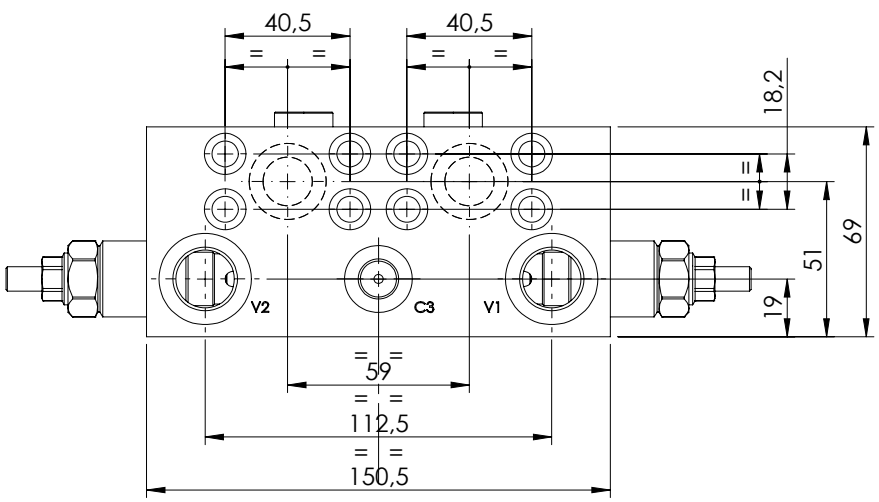

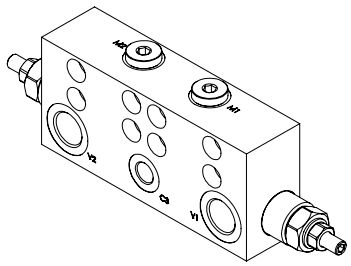

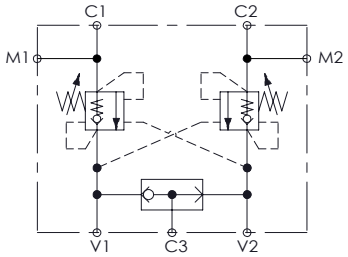

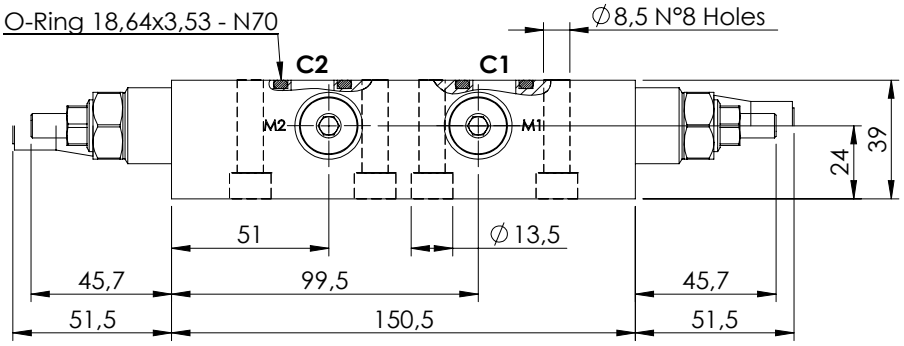

SPECIFICATIONS

Max. operating pressure:	350 bar
Rated flow:	60 l/min
Manifold:	Steel
Weight:	2,91 kg

SEALING CAP

Ordering code:

AT000020

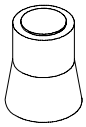

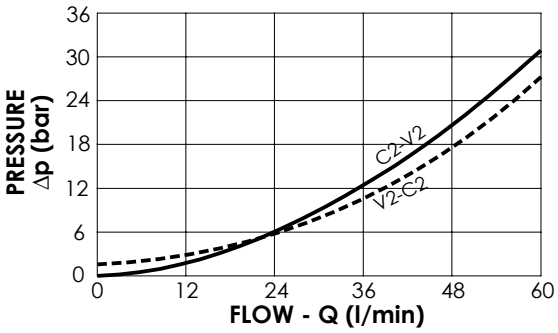

NOTES

Setting: at least 1.3 times the load induced pressure

Designed for REXROTH motors A2FE-28-32 series

ORDERING CODES

Quick code	Description	Pilot ratio	Main ports size	Standard setting (bar, Q=5 l/min)	Adjust. range (bar)	Pressure increase (bar/turn)
MB000868	MBDN-060-ABSF-04-G12-N350	4:1	V1,V2: G1/2" C3,M1,M2: G1/4" C1,C2: Ø14	170	100-350	139

VALVES FOR MOTORS

MBDN-060-LMSF

OVERCENTRE WITH BRAKE RELEASE

ATLANTIC Fluid Tech

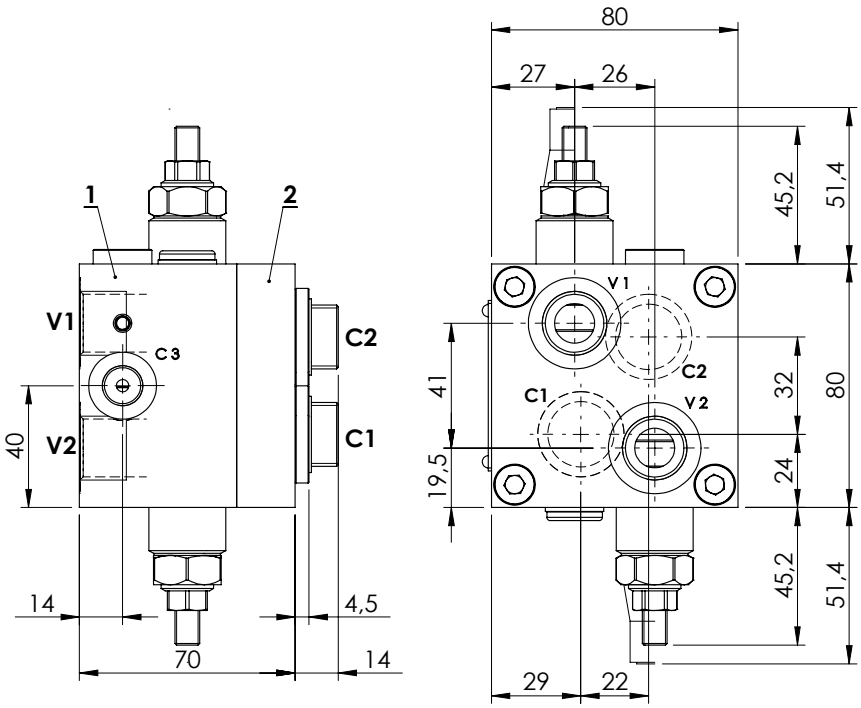

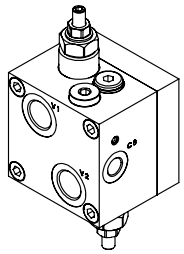

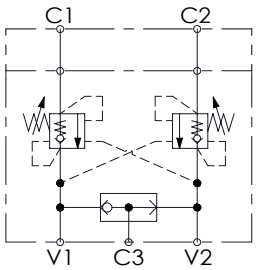

SPECIFICATIONS

Max. operating pressure:	250 bar
Rated flow:	60 l/min
Manifold:	Anodized Aluminium
Weight:	2,07 kg

SEALING CAP

Ordering code:
AT000020

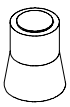

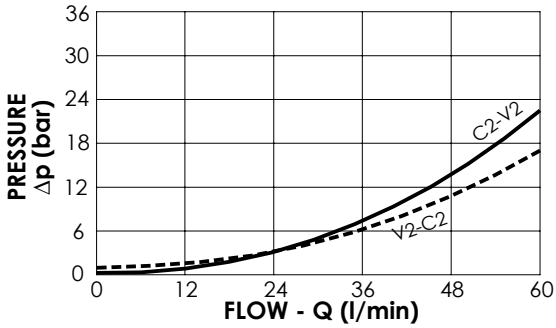

NOTES

Setting: at least 1.3 times the load induced pressure

Designed for OMS motors

Valve composed by:
1.MB000520
2.MP000012

ORDERING CODES

Quick code	Description	Pilot ratio	Main ports size	Standard setting (bar, Q=5 l/min)	Adjust. range (bar)	Pressure increase (bar/turn)
MB000036	MBDN-060-LMSF-04-G12-N200-NOMS	4,2:1	V1,V2: G 1/2" C1,C2: OMS flange C3: G 1/4"	200	60-210	62

VALVES FOR MOTORS

MBDN-060-LMSF

OVERCENTRE WITH BRAKE RELEASE

ATLANTIC Fluid Tech

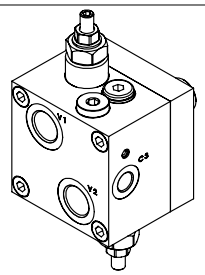

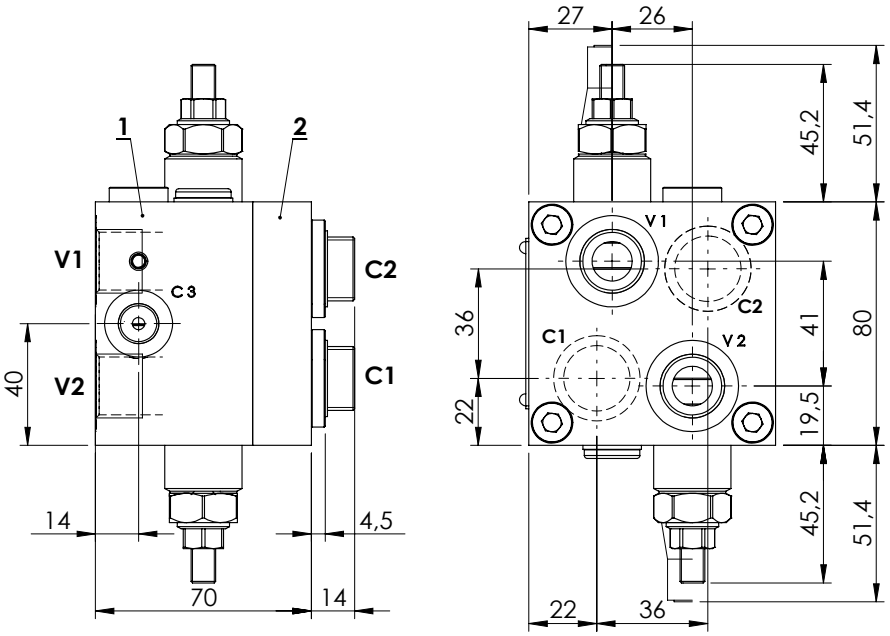

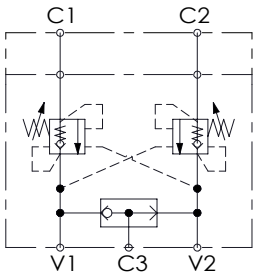

SPECIFICATIONS

Max. operating pressure:	250 bar
Rated flow:	60 l/min
Manifold:	Anodized Aluminium
Weight:	2,07 kg

SEALING CAP

Ordering code:
AT000020

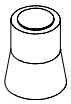

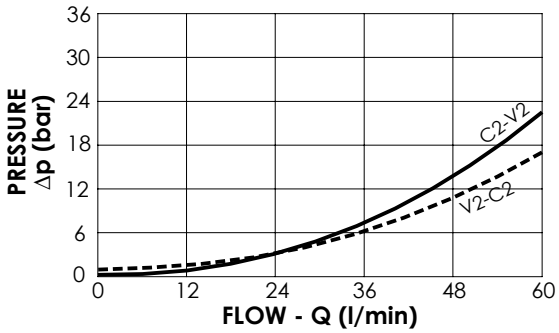

NOTES

Setting: at least 1.3 times the load induced pressure

Designed for OMP motors

Valve composed by:
1.MB000520
2.MP000013

ORDERING CODES

Quick code	Description	Pilot ratio	Main ports size	Standard setting (bar, Q=5 l/min)	Adjust. range (bar)	Pressure increase (bar/turn)
MB000208	MBDN-060-LMSF-04-G12-N200-NOMP	4,2:1	V1,V2: G 1/2" C1,C2: OMP flange C3: G1/4"	200	60-210	62

VALVES FOR MOTORS

MBDN-060-AMSF

OVERCENTRE WITH BRAKE RELEASE

ATLANTIC Fluid Tech

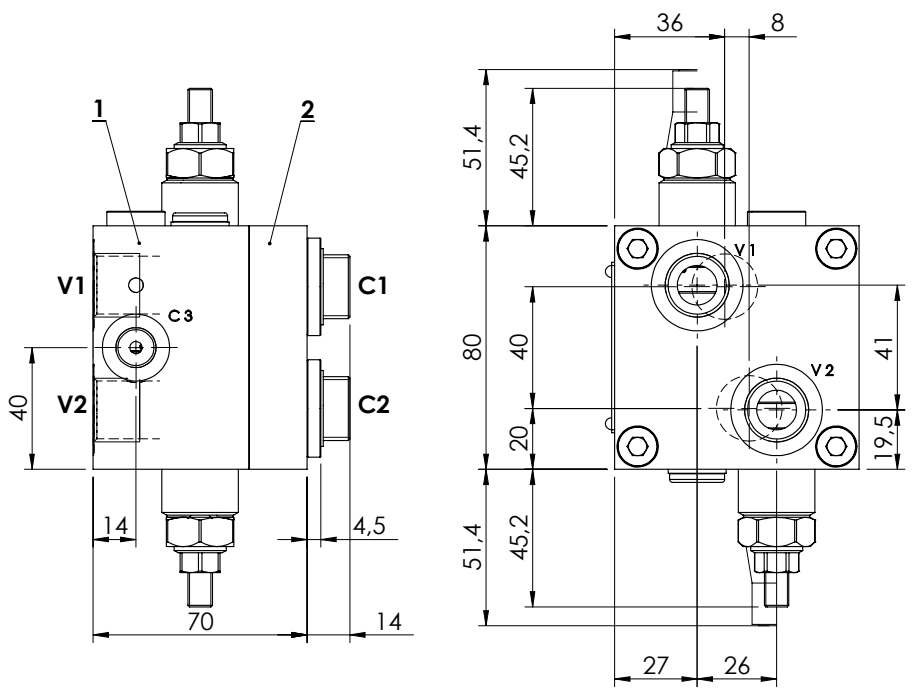

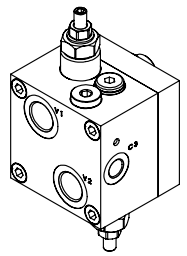

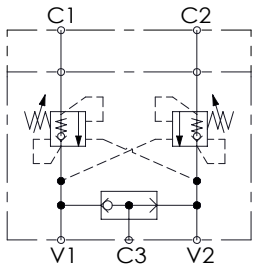

SPECIFICATIONS

Max. operating pressure:	350 bar
Rated flow:	60 l/min
Manifold:	Steel
Weight:	3,44 kg

SEALING CAP

Ordering code:

AT000020

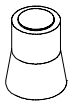

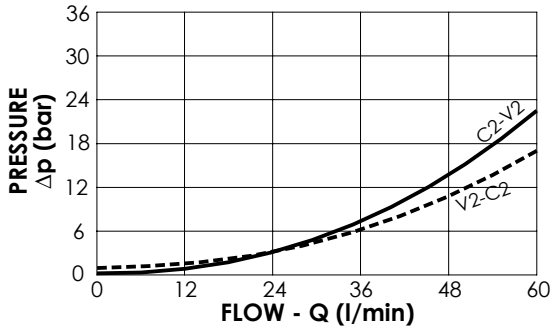

NOTES

Setting: at least 1.3 times the load induced pressure

Designed for SAM HYDRAULIK BR motors

Valve composed by:
1.MB000619
2.MP000034

ORDERING CODES

Quick code	Description	Pilot ratio	Main ports size	Standard setting (bar, Q=5 l/min)	Adjust. range (bar)	Pressure increase (bar/turn)
MB000317	MBDN-060-AMSF-04-G12-N200-SH BR	4,2:1	V1,V2: G 1/2" C1,C2: Sam Hydraulik flange C3: G 1/4"	200	60-210	62

VALVES FOR MOTORS

MBDN-060-AMSF

OVERCENTRE WITH BRAKE RELEASE

ATLANTIC Fluid Tech

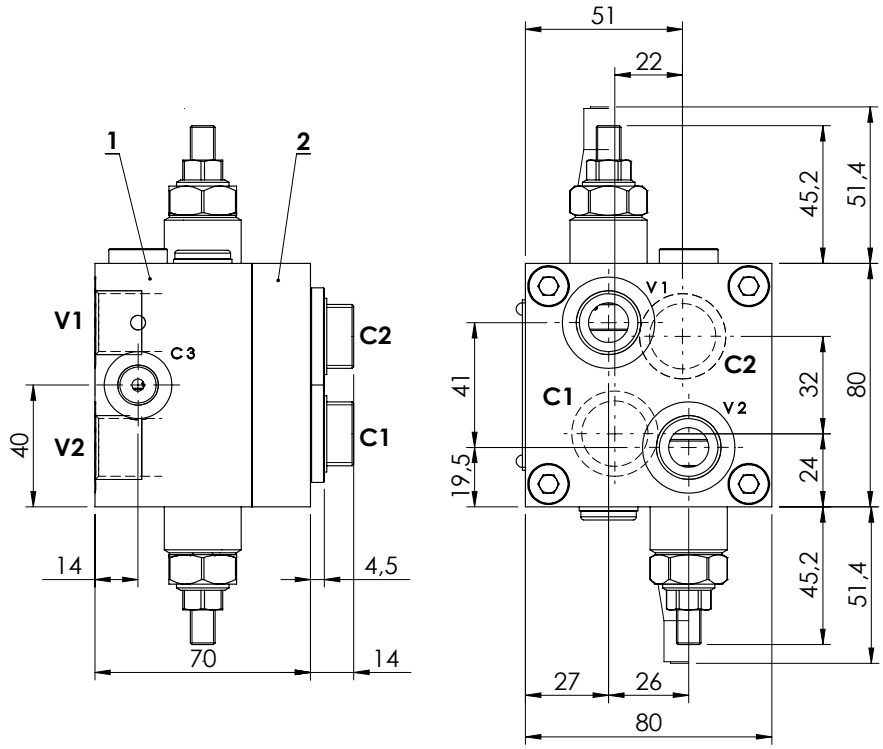

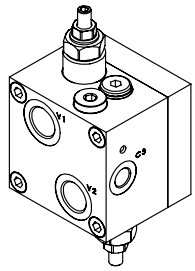

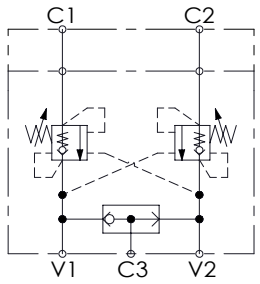

SPECIFICATIONS

Max. operating pressure:	350 bar
Rated flow:	60 l/min
Manifold:	Steel
Weight:	3,44 kg

SEALING CAP

Ordering code:
AT000020

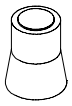

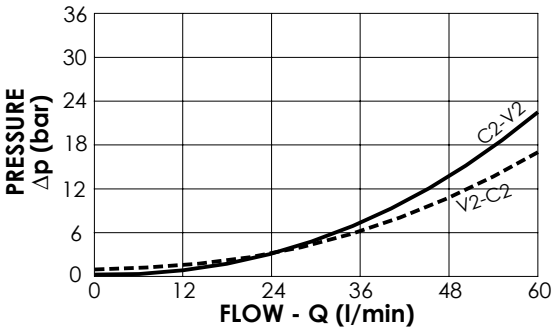

NOTES

Setting: at least 1.3 times the load induced pressure

Designed for
SAM HYDRAULIC HR/OMS motors

Valve composed by:
1.MB000619
2.MP000030

ORDERING CODES

Quick code	Description	Pilot ratio	Main ports size	Standard setting (bar, Q=5 l/min)	Adjust. range (bar)	Pressure increase (bar/turn)
MB000319	MBDN-060-AMSF-04-G12-N200-SH HR	4,2:1	V1,V2: **G 1/2"** C1,C2: **Sam Hydraulic HR /OMS** C3: **G 1/4"**	200	60-210	62

VALVES FOR MOTORS

MBDN-060-AMSR

OVERCENTRE WITH BRAKE RELEASE

ATLANTIC Fluid Tech

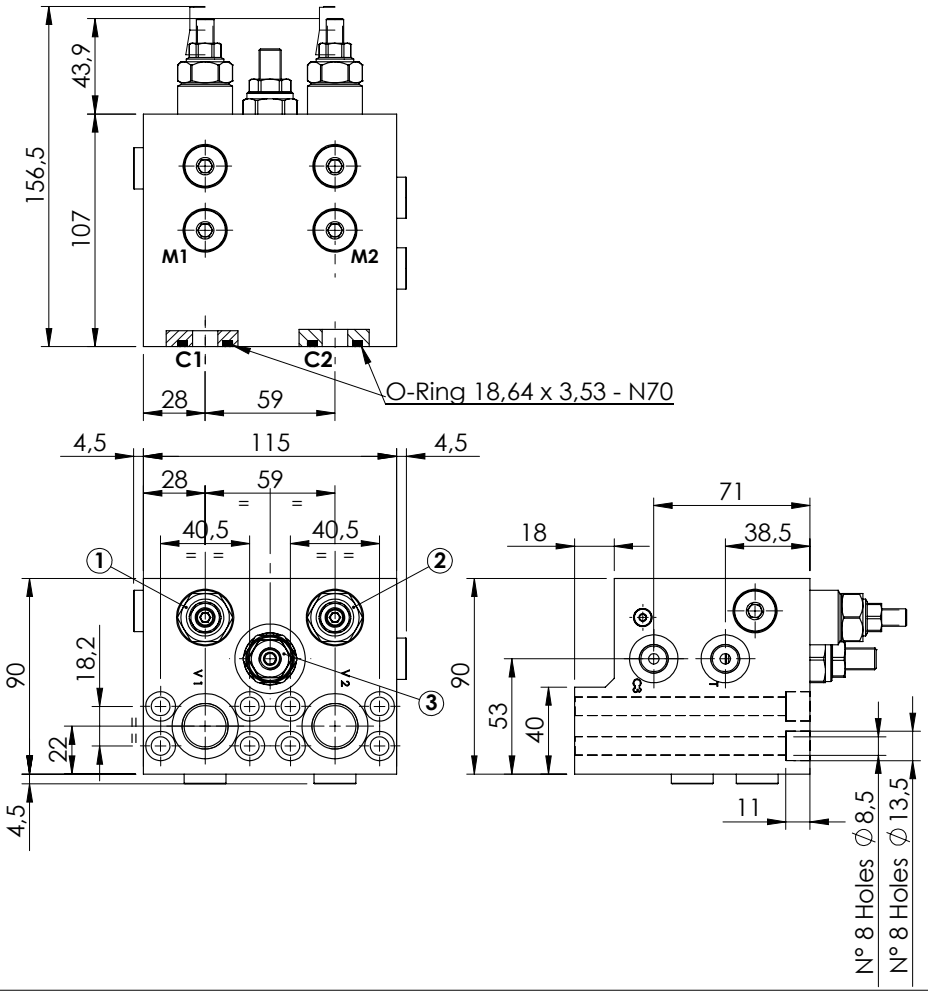

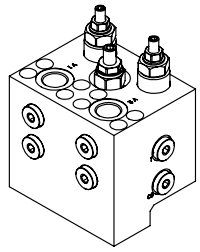

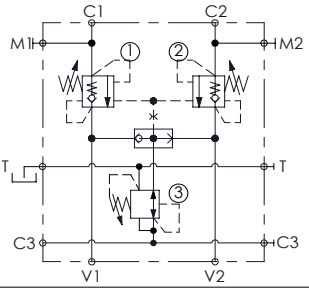

SPECIFICATIONS

Max. operating pressure:	420 bar
Rated flow:	60 l/min
Manifold:	Steel
Weight:	7,04 kg

SEALING CAP

Ordering code:

AT000020

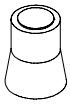

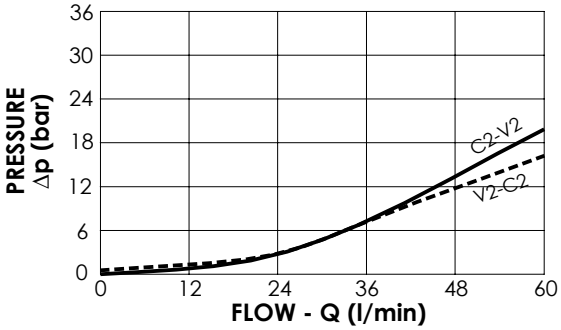

NOTES

Setting: at least 1.3 times the load induced pressure

Designed for REXROTH A2FE 28-32 motors

ORDERING CODES

Quick code	Description	Pilot ratio	Main ports size	Standard setting (bar, Q=5 l/min)	Adjust. range (bar)	Pressure increase (bar/turn)
MB000483	**MBDN-060-AMSR-11-S12-N420**	**11:1**	V1,V2:**G1/2"** C1,C2:**1/2 SAE 6000** C3,T,M1,M2:**G1/4"**	①②**:350** ③**:50**	①②**:80-350** ③**:10-60**	①②**:161** ③**:6**

VALVES FOR MOTORS

MBDN-100-AMSR

OVERCENTRE WITH BRAKE RELEASE

ATLANTIC Fluid Tech

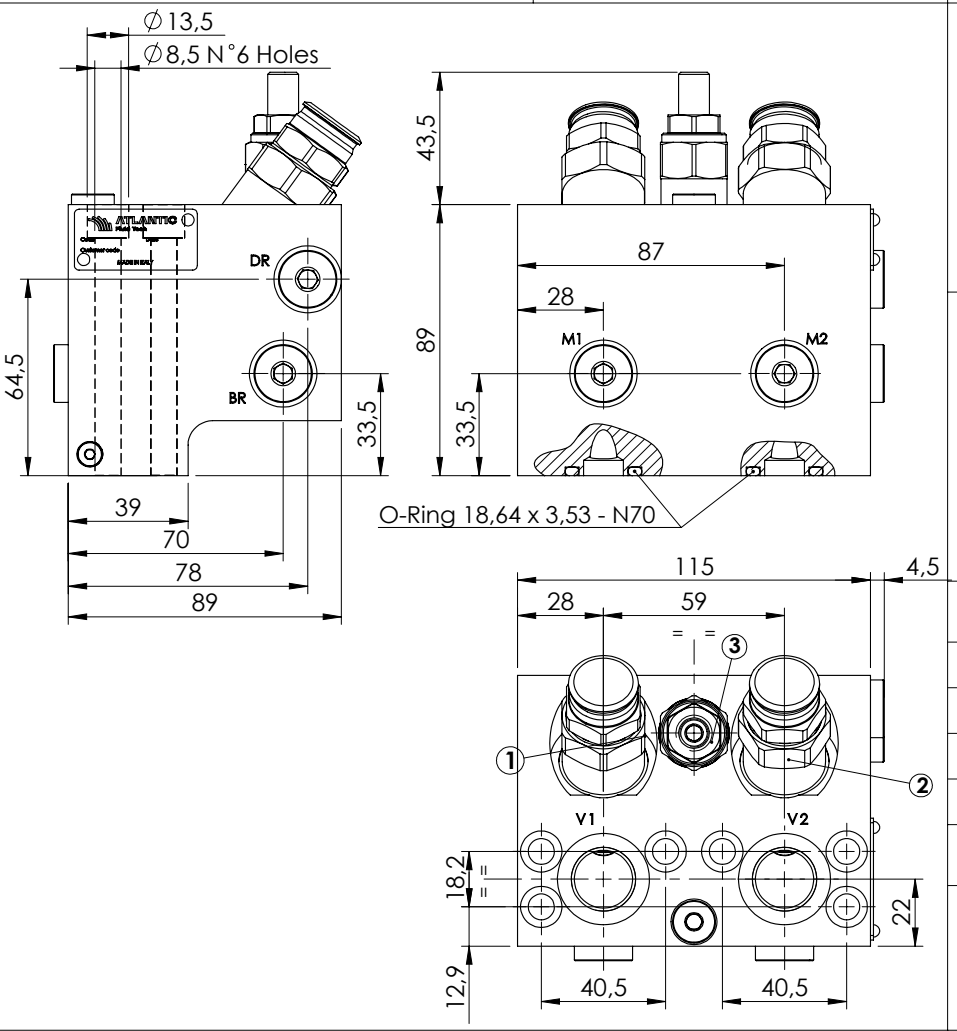

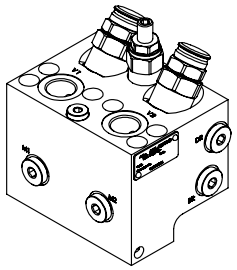

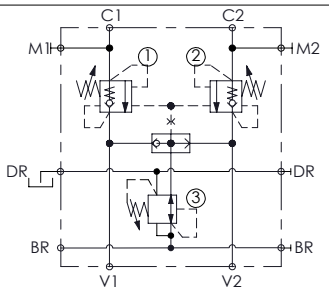

SPECIFICATIONS

Max. operating pressure:	420 bar
Rated flow:	100 l/min
Manifold:	Steel
Weight:	5,83 kg

SEALING CAP

Ordering code:

PT000243

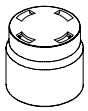

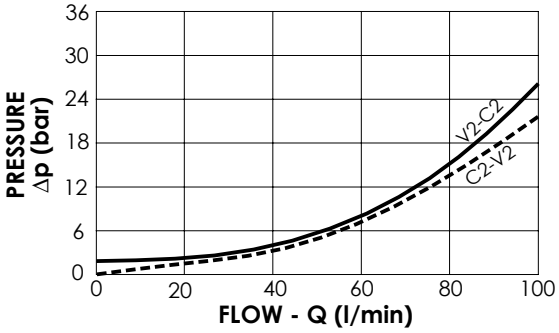

NOTES

Setting: at least 1.3 times the load induced pressure

Designed for REXROTH A2FE 28-32 motors

ORDERING CODES

Quick code	Description	Pilot ratio	Main ports size	Standard setting (bar, Q=5 l/min)	Adjust. range (bar)	Pressure increase (bar/turn)
MB000484	**MBDN-100-AMSR-04-S12-N420**	**3,8:1**	V1,V2: **G1/2"** C1,C2: **1/2" SAE 6000** DR,BR,M1,M2: **G1/4"**	**①②:350** **③:40**	**①②:100-350** **③:10-60**	**①②:118** **③:6**
MB000766	**MBDN-100-AMSR-08-S12-N420**	**8:1**	V1,V2: **G1/2"** C1,C2: **1/2" SAE 6000** DR,BR,M1,M2: **G1/4"**	**①②:350** **③:40**	**①②:100-350** **③:10-60**	**①②:132** **③:6**

VALVES FOR MOTORS

MBDN-150-AMSR

OVERCENTRE WITH BRAKE RELEASE

ATLANTIC Fluid Tech

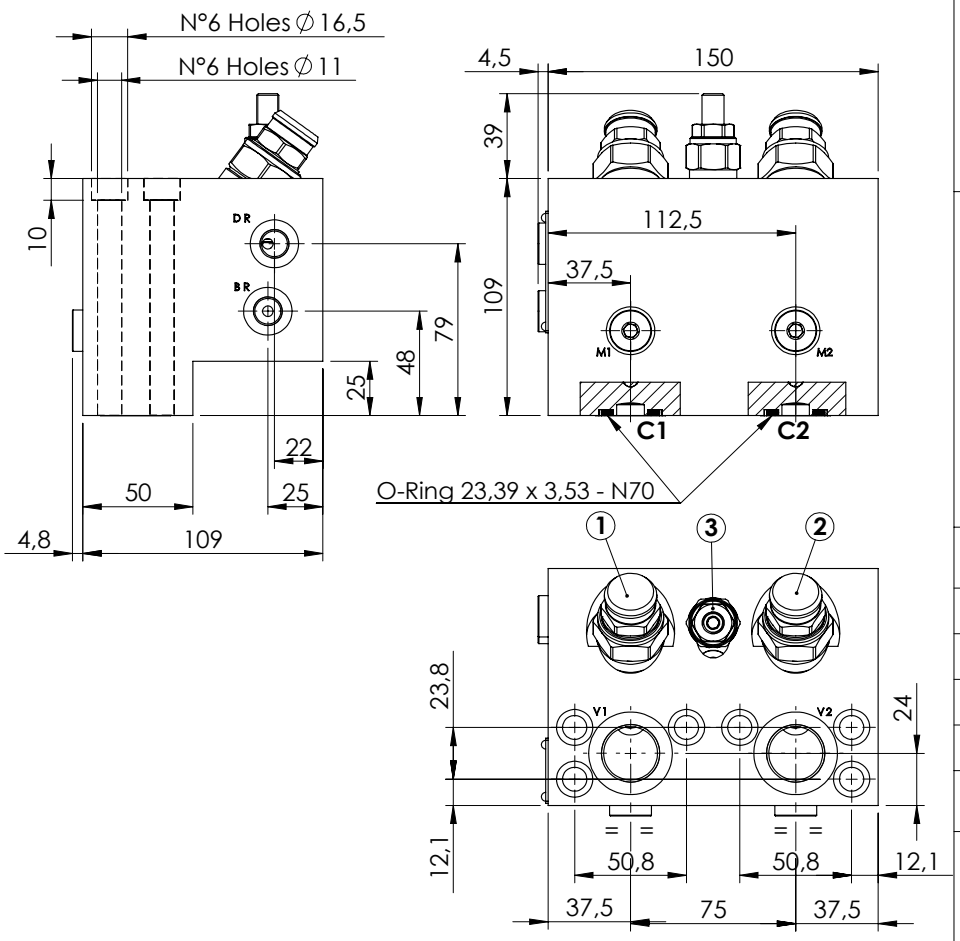

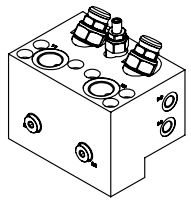

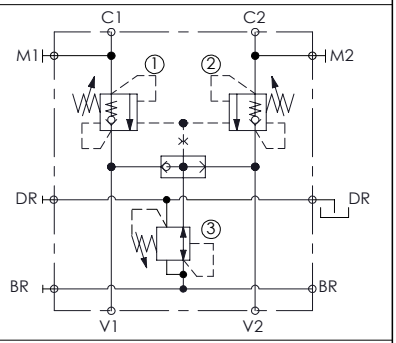

SPECIFICATIONS

Max. operating pressure:	420 bar
Rated flow:	150 l/min
Manifold:	Steel
Weight:	11 kg

SEALING CAP

Ordering code:
ST000012

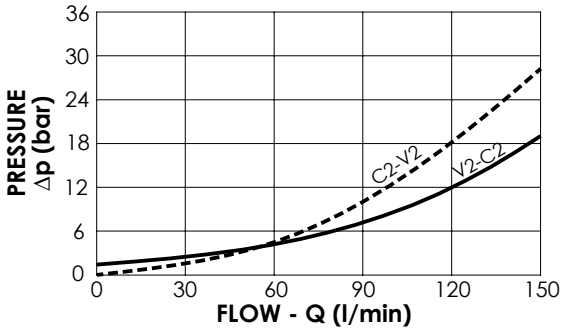

NOTES

Setting: at least 1.3 times the load induced pressure

Designed for REXROTH A2FE 45-56-63 motors

ORDERING CODES

Quick code	Description	Pilot ratio	Main ports size	Standard setting (bar, Q=5 l/min)	Adjust. range (bar)	Pressure increase (bar/turn)
MB000347	**MBDN-150-AMSR-04-S34-N420**	**4:1**	V1,V2:**G3/4"** C1,C2:**3/4" SAE 6000** BR,DR,M1,M2:**G1/4"**	**①②: 350** **③: 30**	**①②:100-350** **③: 10-60**	**①②: 104** **③: 6**
MB000350	**MBDN-150-AMSR-08-S34-N420**	**8:1**	V1,V2:**G3/4"** C1,C2:**3/4" SAE 6000** BR,DR,M1,M2:**G1/4"**	**①②: 380** **③: 30**	**①②:100-420** **③: 10-60**	**①②: 82** **③: 6**

VALVES FOR MOTORS

MBDN-150-AMSR

OVERCENTRE WITH BRAKE RELEASE

ATLANTIC Fluid Tech

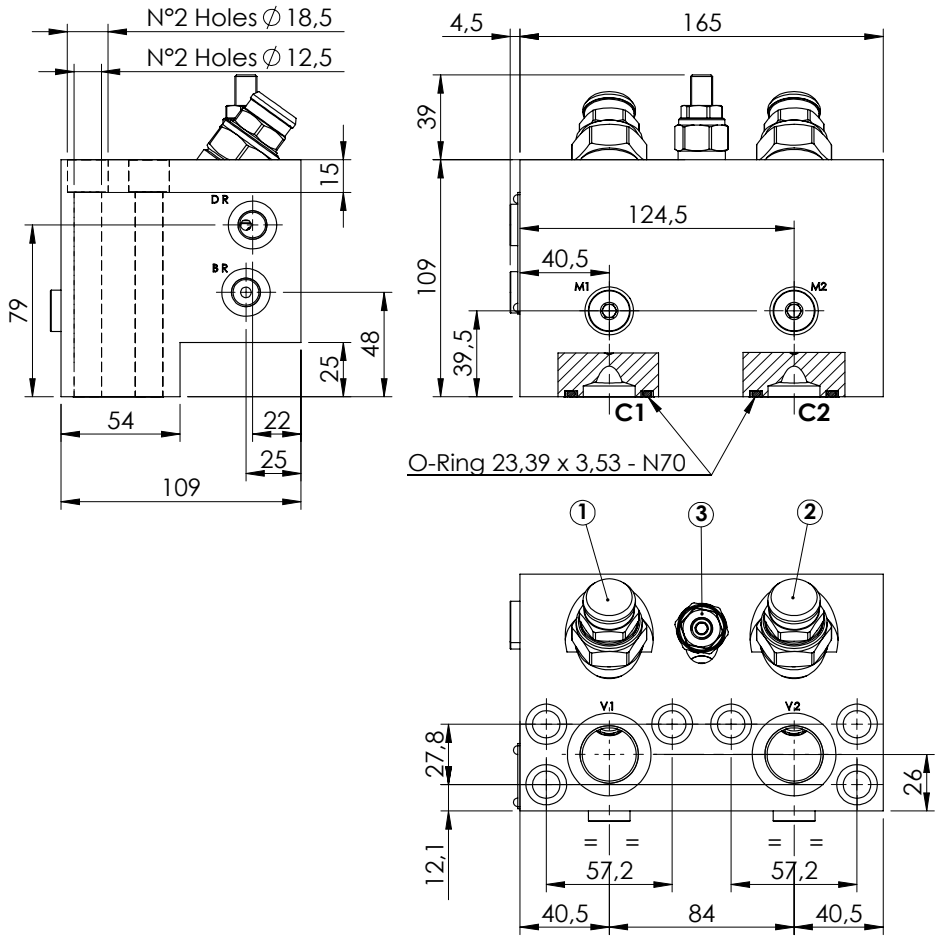

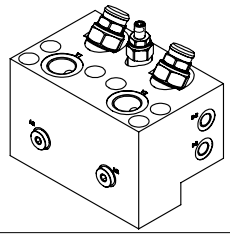

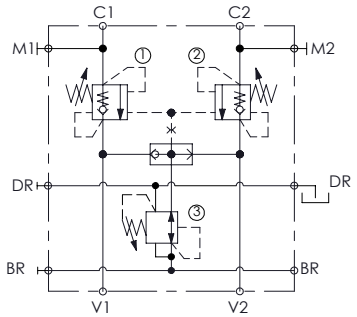

SPECIFICATIONS

Max. operating pressure:	**420 bar**
Rated flow:	**150 l/min**
Manifold:	**Steel**
Weight:	**12,07 kg**

SEALING CAP

Ordering code:

ST000012

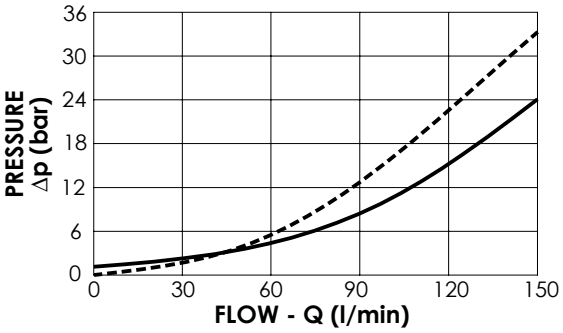

NOTES

Setting: at least 1.3 times the load induced pressure

Designed for REXROTH A2FE 80-90 motors

ORDERING CODES

Quick code	Description	Pilot ratio	Main ports size	Standard setting (bar, Q=5 l/min)	Adjust. range (bar)	Pressure increase (bar/turn)
MB000477	**MBDN-150-AMSR-04-S10-N420**	**4:1**	V1,V2:**G 3/4"** C1,C2: **1" SAE 6000** BR,DR:**G 1/4"**	**①②: 350** **③: 40**	**①②:100-350** **③: 10-60**	**①②: 104** **③: 6**

VALVES FOR MOTORS

MBDN-300-AMSR

OVERCENTRE WITH BRAKE RELEASE

ATLANTIC Fluid Tech

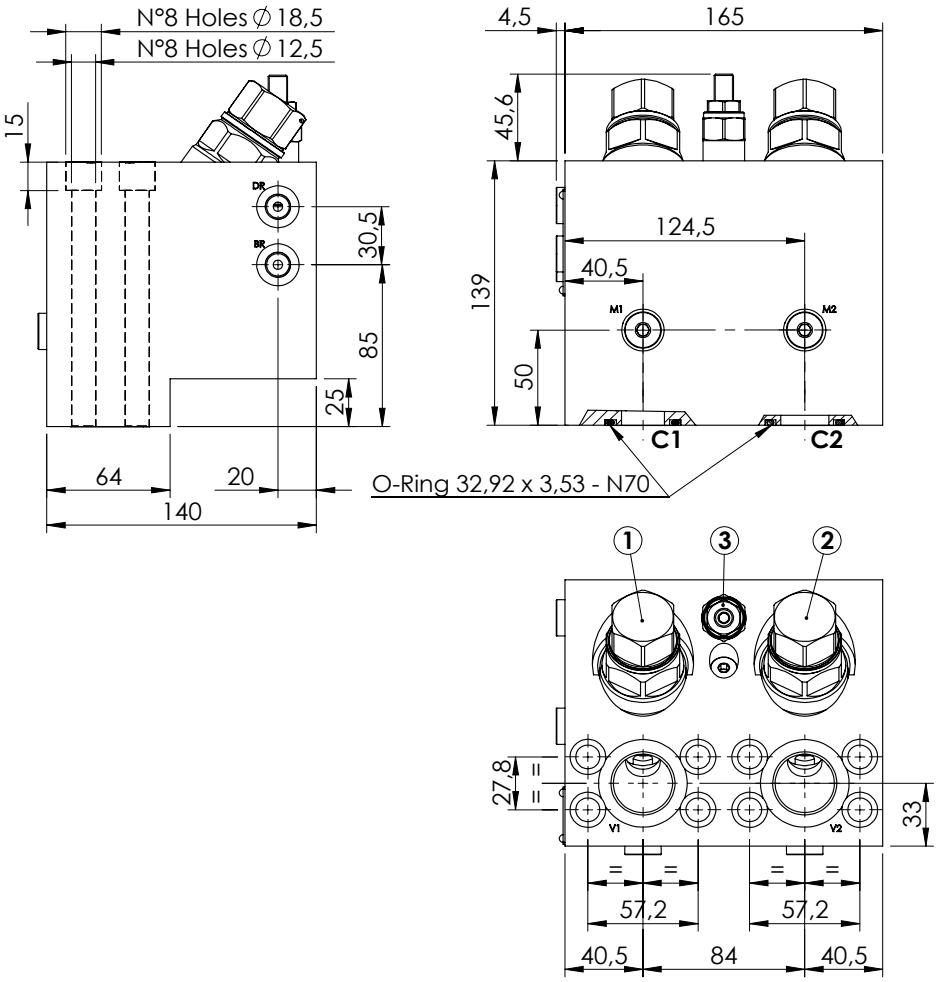

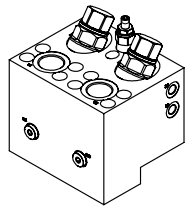

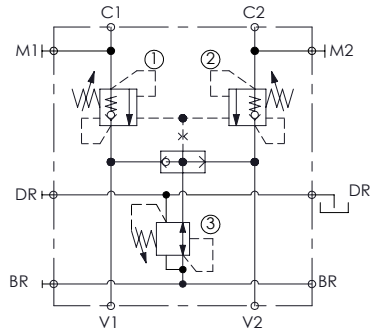

SPECIFICATIONS

Max. operating pressure:	**420 bar**
Rated flow:	**300 l/min**
Manifold:	**Steel**
Weight:	**20,44 kg**

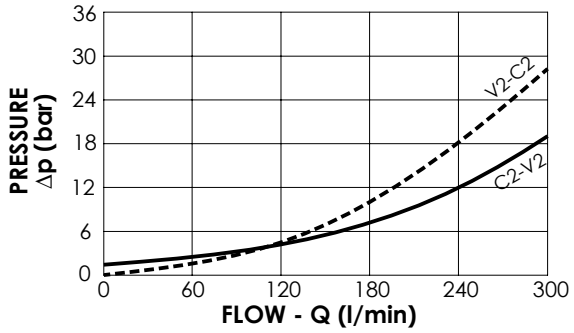

NOTES

Setting: at least 1.3 times the load induced pressure

Designed for REXROTH A2FE 80-90 motors

ORDERING CODES

Quick code	Description	Pilot ratio	Main ports size	Standard setting (bar, Q=5 l/min)	Adjust. range (bar)	Pressure increase (bar/turn)
MB000402	**MBDN-300-AMSR-04-S10-N420**	**4:1**	V1,V2: **G 1"** C1,C2: **1" SAE 6000** BR,DR,M1,M2: **G1/4"**	**①② : 350** **③ : 30**	**①②:100-350** **③: 10-60**	**①② : 75** **③ : 6**
MB000349	**MBDN-300-AMSR-06-S10-N420**	**6:1**	V1,V2: **G 1"** C1,C2: **1" SAE 6000** BR,DR,M1,M2: **G1/4"**	**①② : 380** **③ : 30**	**①②:100-420** **③: 10-60**	**①② : 62** **③ : 6**

VALVES FOR MOTORS

MBDN-320-AMSR

OVERCENTRE WITH BRAKE RELEASE

ATLANTIC Fluid Tech

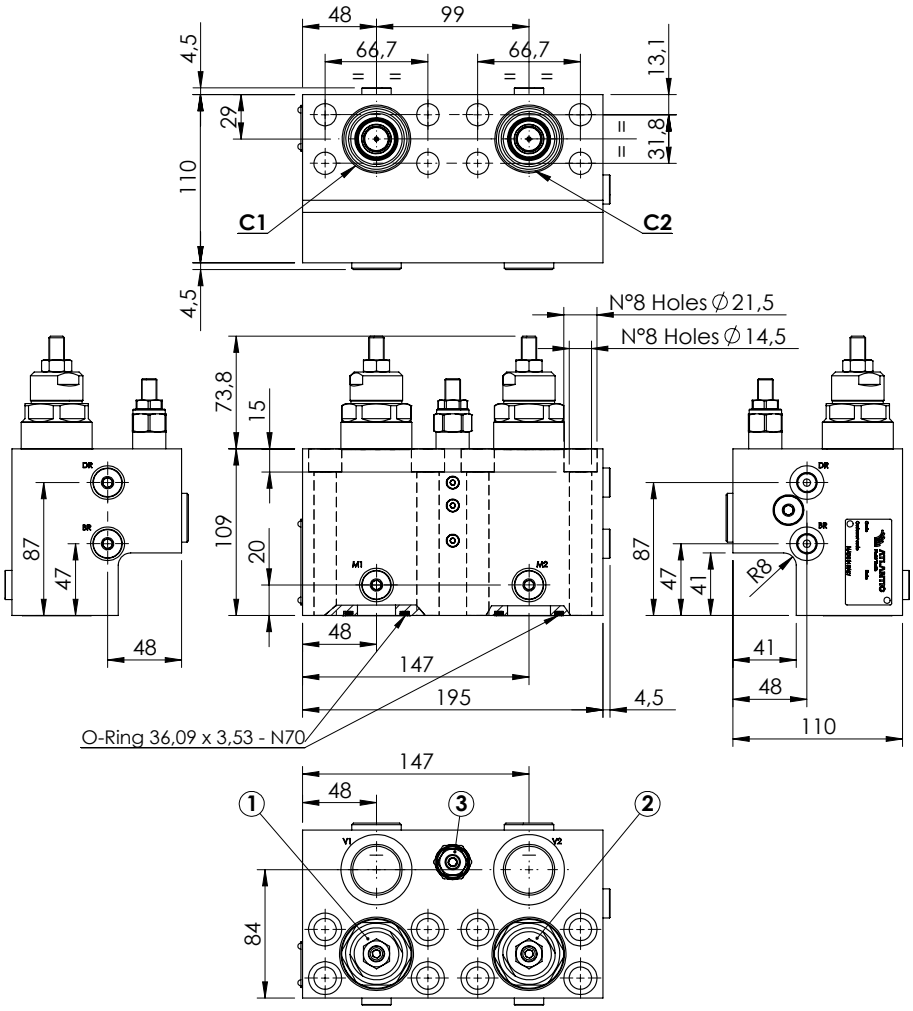

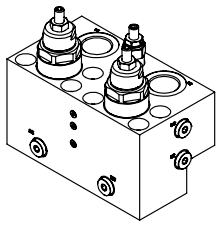

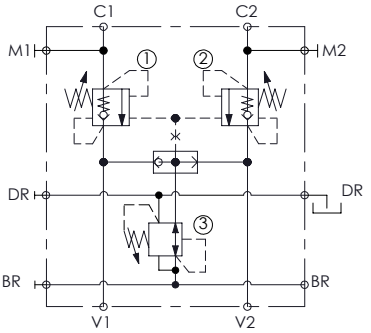

SPECIFICATIONS

Max. operating pressure:	**350 bar**
Rated flow:	**320 l/min**
Manifold:	**Steel**
Weight:	**13,7 kg**

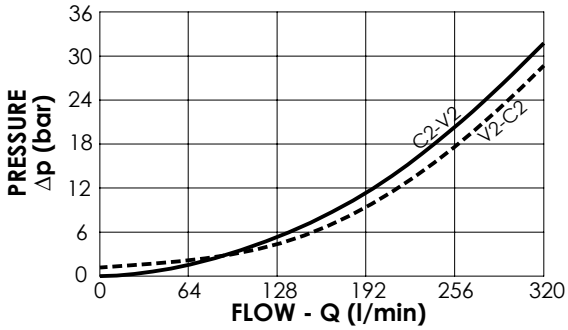

NOTES

Setting: at least 1.3 times the load induced pressure

Designed for REXROTH A2FE 107-125 160-180 motors

ORDERING CODES

Quick code	Description	Pilot ratio	Main ports size	Standard setting (bar, Q=5 l/min)	Adjust. range (bar)	Pressure increase (bar/turn)
MB000563	**MBDN-320-AMSR-08-S11-N350**	**8:1**	V1,V2: **G 1"** C1,C2: **1-1/4" SAE 6000** BR,DR,M1,M2: **G1/4"**	**①②: 350** **③: 40**	**①②:140-350** **③: 10-60**	**①②: 56** **③: 6,5**

VALVES FOR WINCHES

MBSN-100-ZMSF

PILOT ASSISTED OVERCENTRE

ATLANTIC Fluid Tech

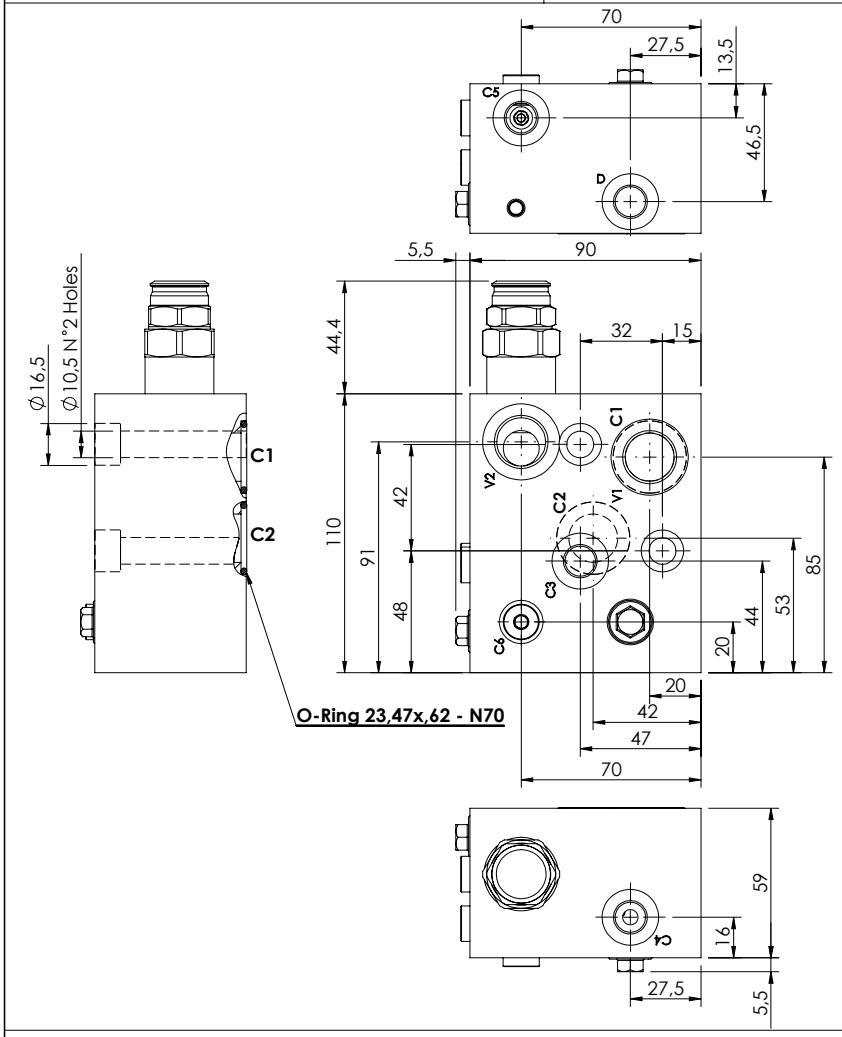

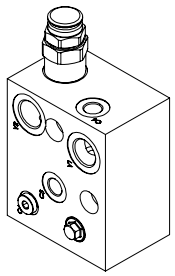

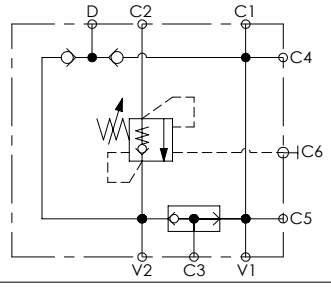

SPECIFICATIONS

Max. operating pressure:	**350 bar**
Rated flow:	**100 l/min**
Manifold:	**Aluminum**
Weight:	**1,61 kg**

SEALING CAP

Ordering code:
PT000243

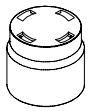

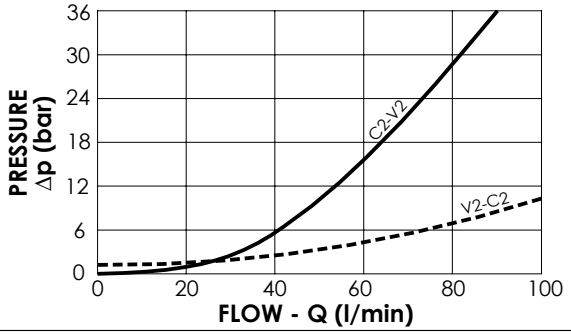

NOTES

Setting: at least 1.3 times the load induced pressure

Designed for DANFOSS motors OMS series.

ORDERING CODES

Quick code	Description	Pilot ratio	Main ports size	Standard setting (bar, Q=5 l/min)	Adjust. range (bar)	Pressure increase (bar/turn)
MB000925	**MBSN-100-ZMSF-04-G12-N350**	**4:1**	V1,V2: **G1/2"** C6: **G1/8"** C1,C2: **Ø19** D,C3,C4,C5: **G1/4"**	**250**	**100-350**	**124**

VALVES FOR WINCHES

MBSN-250-AMSF

SINGLE ACTING WITH BRAKE RELEASE

ATLANTIC Fluid Tech

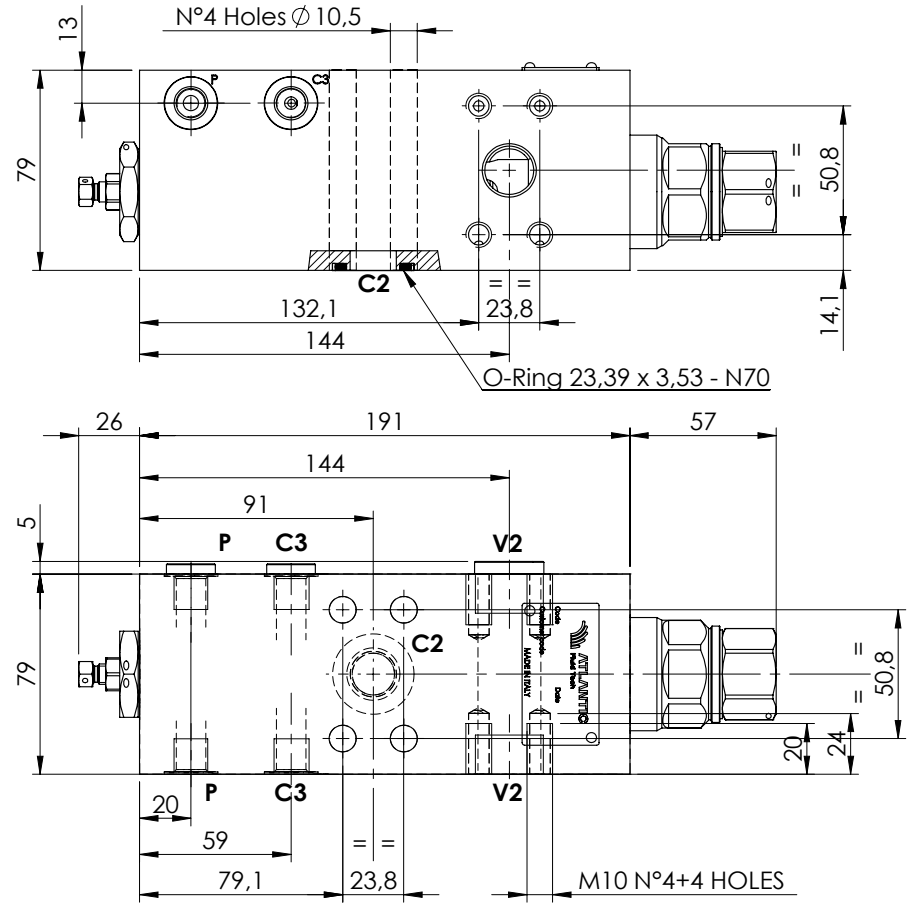

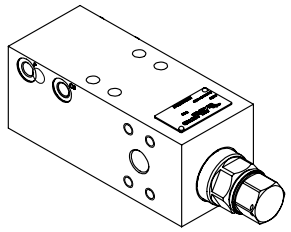

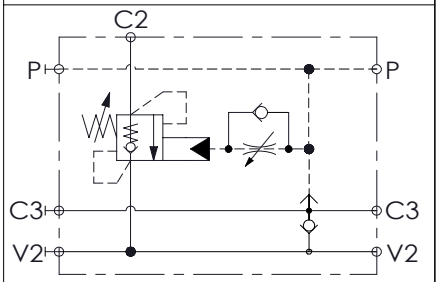

SPECIFICATIONS

Max. operating pressure:	**500 bar**
Rated flow:	**250 l/min**
Manifold:	**Steel**
Weight:	**8,1 kg**

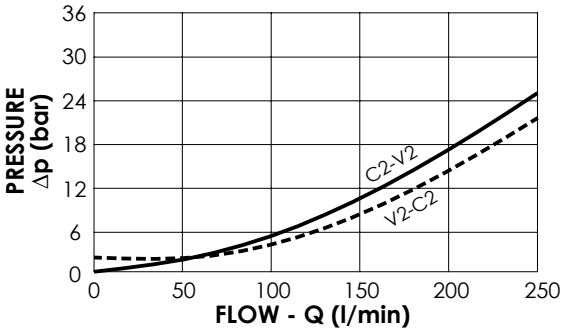

NOTES

Setting: at least 1.3 times the load induced pressure

ORDERING CODES

Quick code	Description	Pilot ratio	Main ports size	Standard setting (bar, Q=5 l/min)	Adjust. range (bar)	Pressure increase (bar/turn)
MB000663	**MBSN-250-AMSF-13-S34-N500**	**13:1**	C2,V2 : **3/4" SAE 6000** P,C3 : **G 1/4"**	**500**	**250-500**	**104**

VALVES FOR WINCHES

MBSN-300-AMSF

SINGLE ACTING WITH BRAKE RELEASE

ATLANTIC Fluid Tech

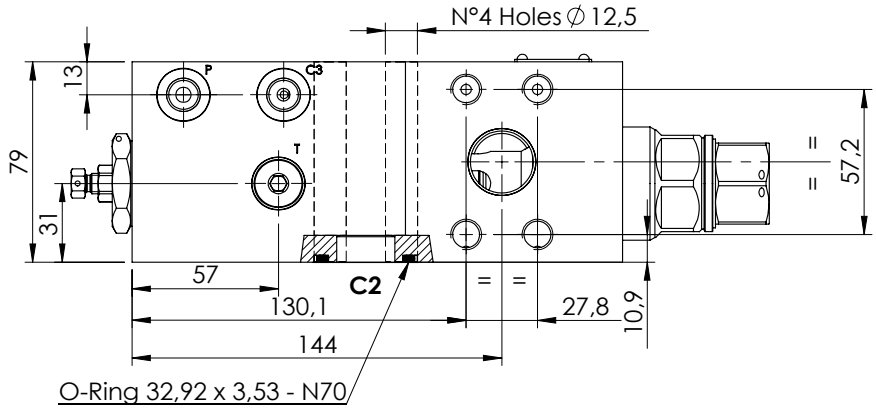

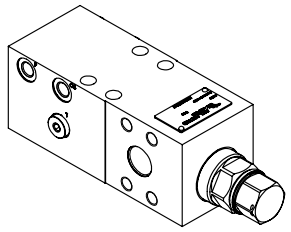

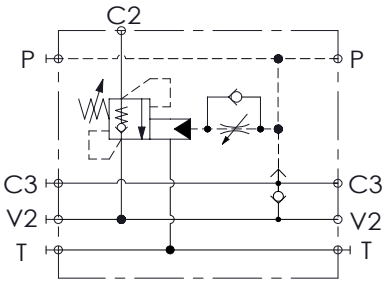

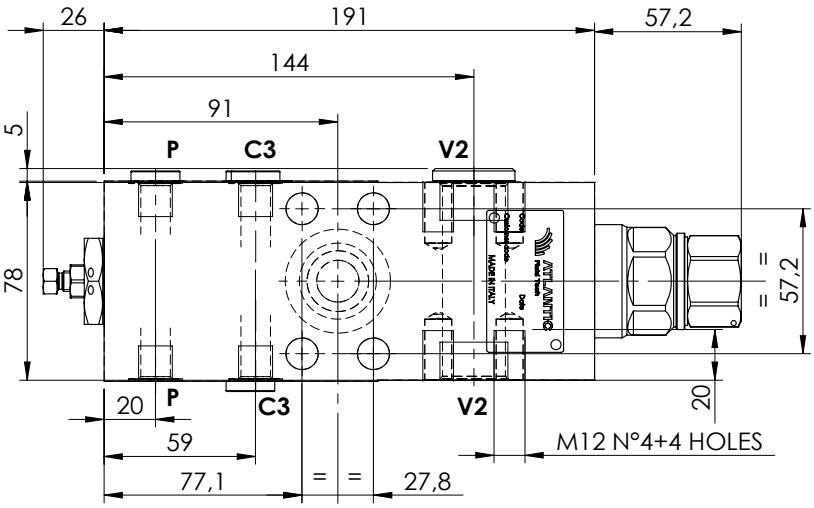

SPECIFICATIONS

Max. operating pressure:	**500 bar**
Rated flow:	**300 l/min**
Manifold:	**Steel**
Weight:	**8 kg**

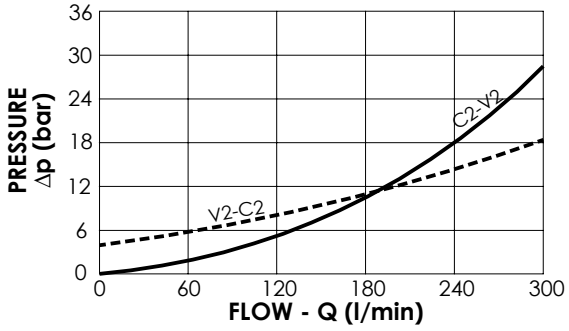

NOTES

Setting: at least 1.3 times the load induced pressure

ORDERING CODES

Quick code	Description	Pilot ratio	Main ports size	Standard setting (bar, Q=5 l/min)	Adjust. range (bar)	Pressure increase (bar/turn)
MB000664	**MBSN-300-AMSF-13-S10-N500**	**13:1**	C2,V2 : **1" SAE 6000** P,C3 : **G 1/4"**	**500**	**250-500**	**104**

VALVES FOR WINCHES

MBSN-300-AMSF

SINGLE ACTING WITH BRAKE RELEASE

ATLANTIC Fluid Tech

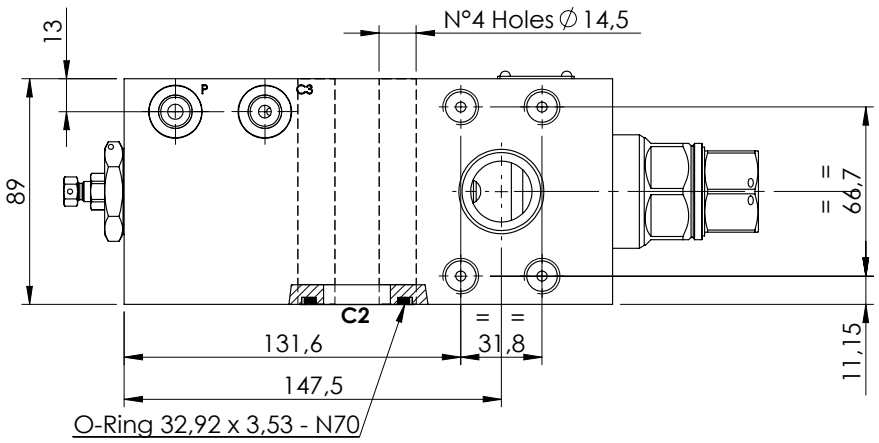

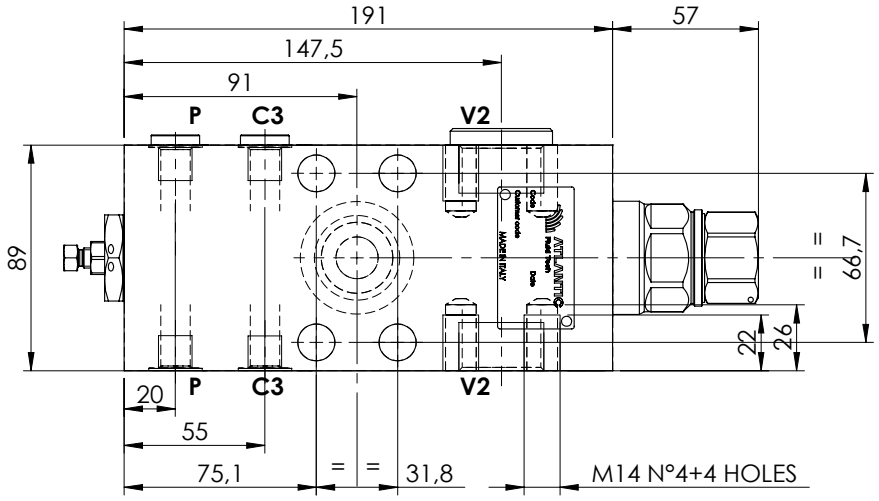

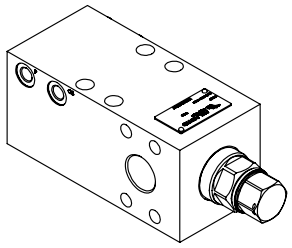

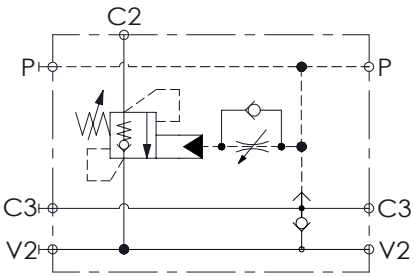

SPECIFICATIONS

Max. operating pressure:	**500 bar**
Rated flow:	**300 l/min**
Manifold:	**Steel**
Weight:	**10,9 kg**

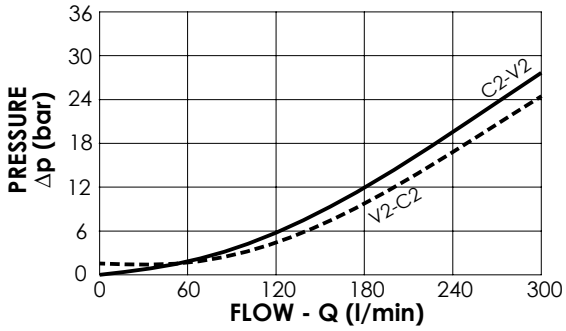

NOTES

Setting: at least 1.3 times the load induced pressure

ORDERING CODES

Quick code	Description	Pilot ratio	Main ports size	Standard setting (bar, Q=5 l/min)	Adjust. range (bar)	Pressure increase (bar/turn)
MB000665	**MBSN-300-AMSF-13-S11-N500**	**13:1**	C2,V2 : **1-1/4" SAE 6000** Pil,C3 : **G 1/4"**	**500**	**250-500**	**104**

VALVES FOR WINCHES

MBDN-500-AMSF

DOUBLE ACTING WITH BRAKE RELEASE

ATLANTIC Fluid Tech

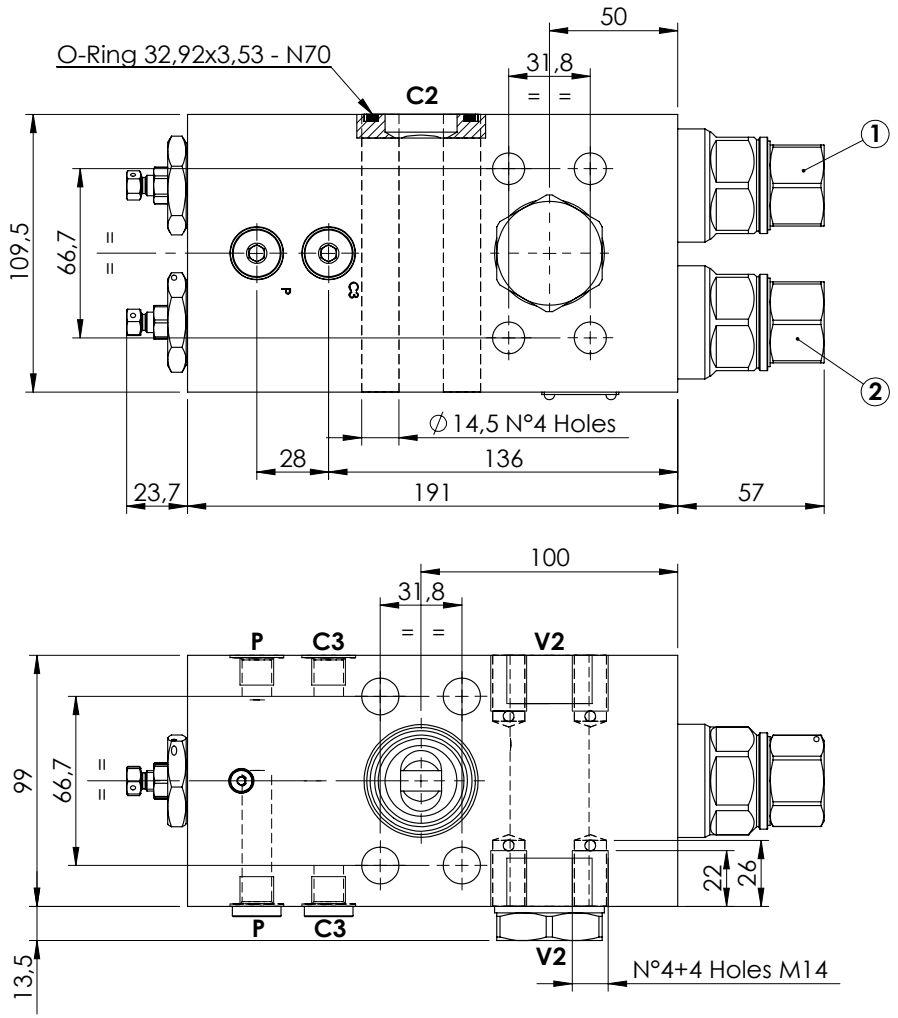

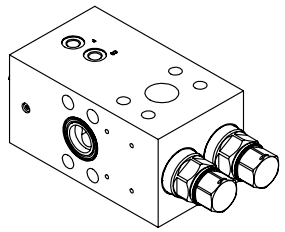

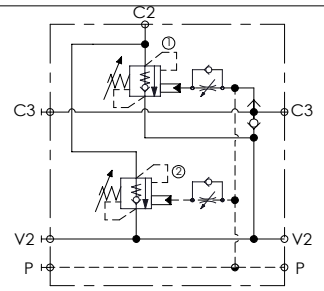

SPECIFICATIONS

Max. operating pressure:	**500 bar**
Rated flow:	**500 l/min**
Manifold:	**Steel**
Weight:	**15,15 kg**

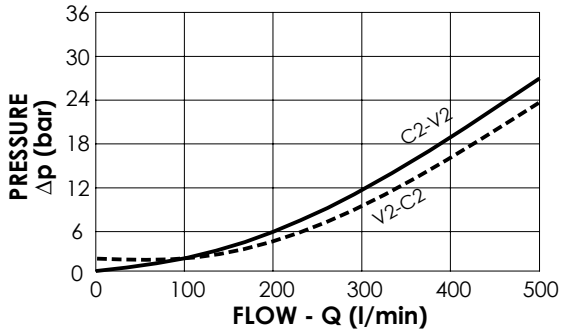

NOTES

Setting: at least 1.3 times the load induced pressure

ORDERING CODES

Quick code	Description	Pilot ratio	Main ports size	Standard setting (bar, Q=5 l/min)	Adjust. range (bar)	Pressure increase (bar/turn)
MB000676	**MBDN-500-AMSF-13-S11-N500**	**13:1**	C2,V2: **1-1/4" SAE 6000** P,E,C3: **G 1/4"**	**500**	**250-500**	**104**

ATLANTIC
Fluid Tech

SECTION 9

Motion Control Valves

MANAGEMENT SYSTEM CERTIFICATION
DNV·GL
ISO 9001 = ISO 14001
OHSAS 18001

MOTION CONTROL VALVES

ATLANTIC Fluid Tech

Hydraulic scheme	Valve description	Valve type	Rated flow (l/min)	Max. pressure (bar)	Installation	Main port size	Page
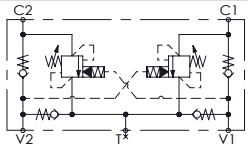	MNDN-040-LLST	Stabilized	40	350	In line	G 3/8"	9.01.**010**
	MNDN-120-LLST	Stabilized	120	350	In line	G 3/4"	9.01.**020**
	MNDN-200-LLST	Stabilized	200	350	In line	G 1"	9.01.**030**
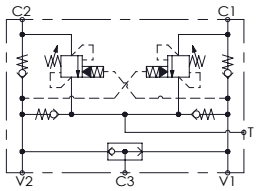	MNDN-040-LLSV	Stabilized, with brake release	40	350	In line	G 3/8"	9.02.**040**
	MNDN-120-LLSV	Stabilized, with brake release	120	350	In line	G 3/4"	9.02.**050**
	MNDN-200-LLSV	Stabilized, with brake release	200	350	In line	G 1"	9.02.**060**
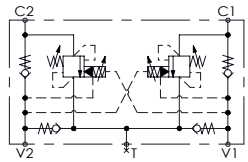	MNDN-040-LLPT	Stabilized and brake, dual setting	40	350	In line	G 3/8"	9.03.**070**
	MNDN-120-LLPT	Stabilized and brake, dual setting	120	350	In line	G 3/4"	9.03.**080**
	MNDN-200-LLPT	Stabilized and brake, dual setting	200	350	In line	G1"	9.03.**090**
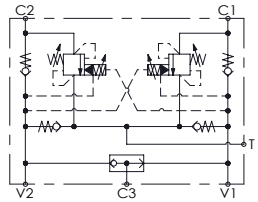	MNDN-040-LLPV	Stabilized and brake, dual setting, with brake release	40	350	In line	G 3/8"	9.03.**100**
	MNDN-120-LLPV	Stabilized and brake, dual setting, with brake release	120	350	In line	G 3/4"	9.03.**110**
	MNDN-200-LLPV	Stabilized and brake, dual setting, with brake release	200	350	In line	G 1"	9.03.**120**

MOTION CONTROL

MNDN-040-LLST

STABILIZED

ATLANTIC Fluid Tech

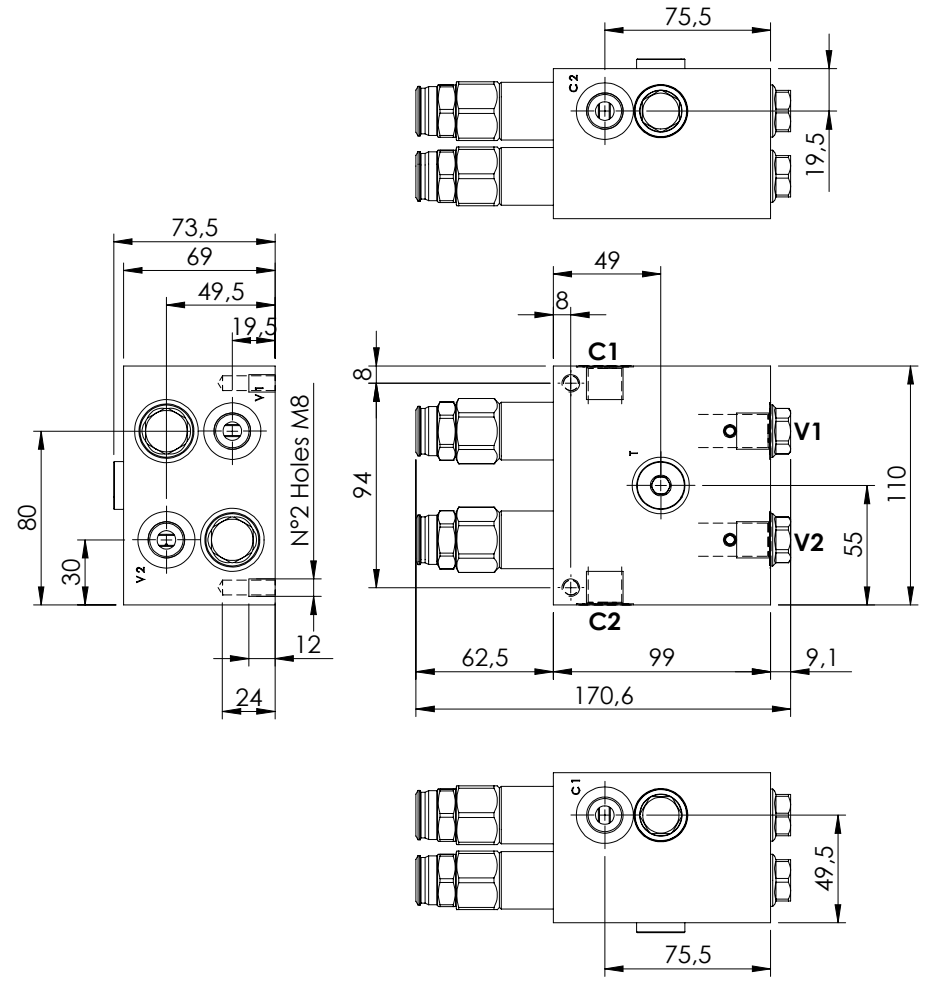

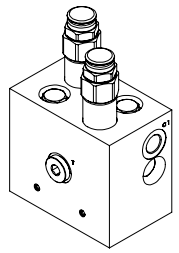

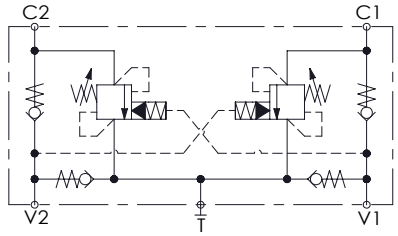

SPECIFICATIONS

Max. operating pressure:	**300 bar**
Rated flow:	**40 l/min**
Manifold:	**Aluminium**
Weight:	**2,65 kg**

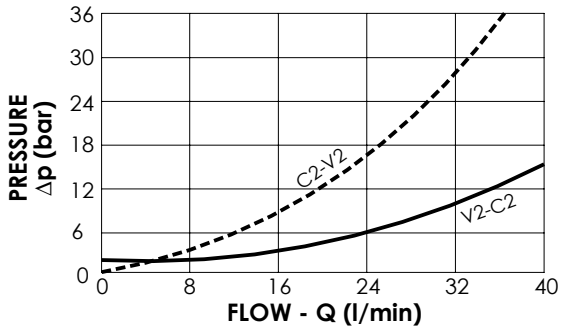

NOTES

Setting: at least 1.3 times the load induced pressure

ORDERING CODES

Quick code	Description	Pilot ratio	Main ports size	Standard setting (bar, Q=5 l/min)	Adjust. range (bar)	Pressure increase (bar/turn)
MN000023	**MNDN-040-LLST-09-G38-N300**	**9:1**	V1,V2,C1,C2: **G 3/8"** T: **G 3/8"**	**150**	**100-300**	**119**
MN000029	**MNDN-040-LLST-03-G38-N300**	**3:1**	V1,V2,C1,C2: **G 3/8"** T: **G 3/8"**	**150**	**100-300**	**119**

MOTION CONTROL

MNDN-120-LLST

STABILIZED

ATLANTIC Fluid Tech

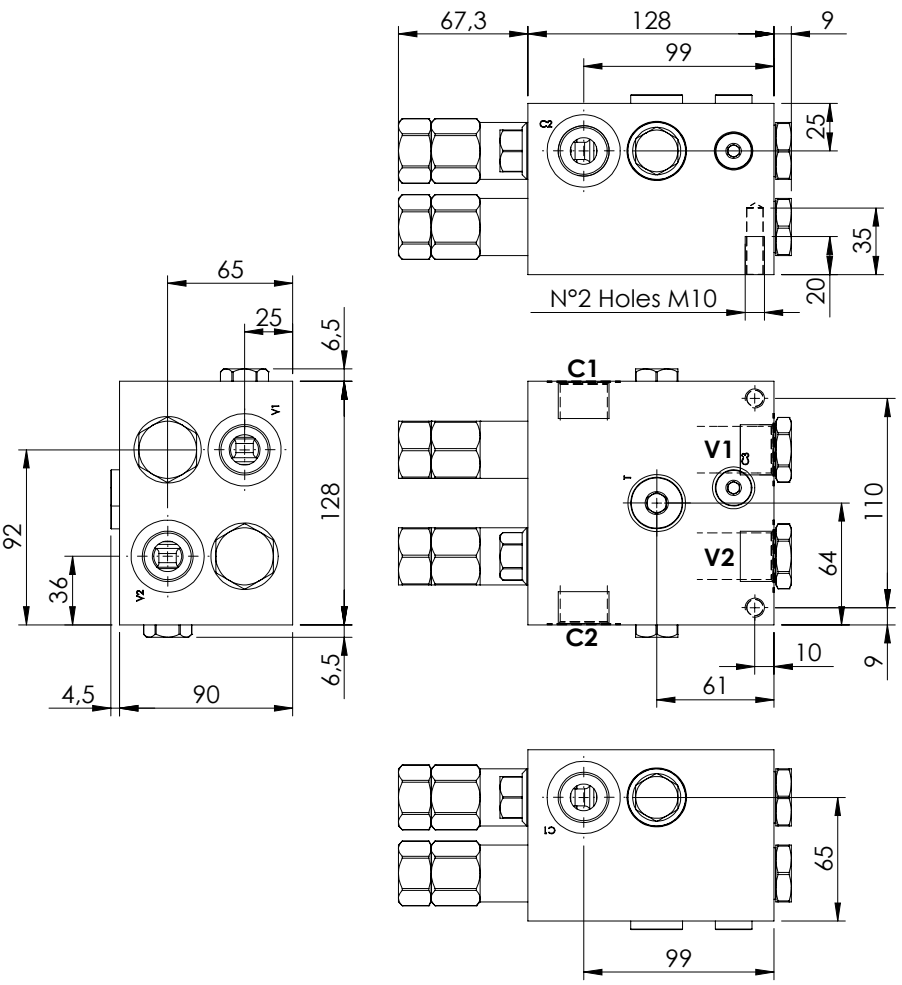

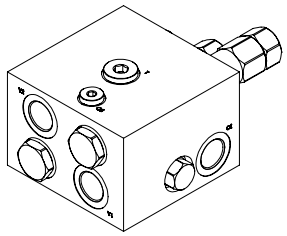

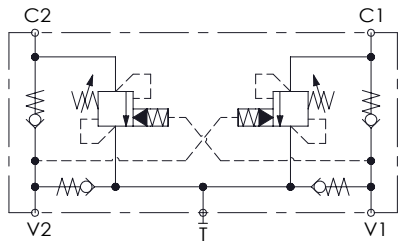

SPECIFICATIONS

Max. operating pressure:	300 bar
Rated flow:	120 l/min
Manifold:	Aluminium
Weight:	5,06 kg

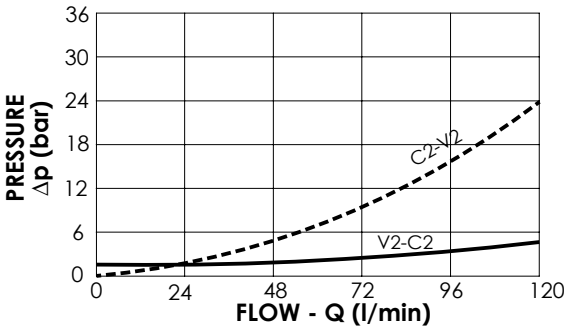

NOTES

Setting: at least 1.3 times the load induced pressure

ORDERING CODES

Quick code	Description	Pilot ratio	Main ports size	Standard setting (bar, Q=5 l/min)	Adjust. range (bar)	Pressure increase (bar/turn)
MN000013	**MNDN-120-LLST-08-G34-N300**	**8:1**	V1,V2,C1,C2 : **G3/4"** T : **G 1/2"**	**150**	**100-300**	**111**
MN000012	**MNDN-120-LLST-03-G34-N300**	**3:1**	V1,V2,C1,C2 : **G3/4"** T : **G 1/2"**	**150**	**70-210**	**73**

MOTION CONTROL

MNDN-200-LLST

STABILIZED

ATLANTIC Fluid Tech

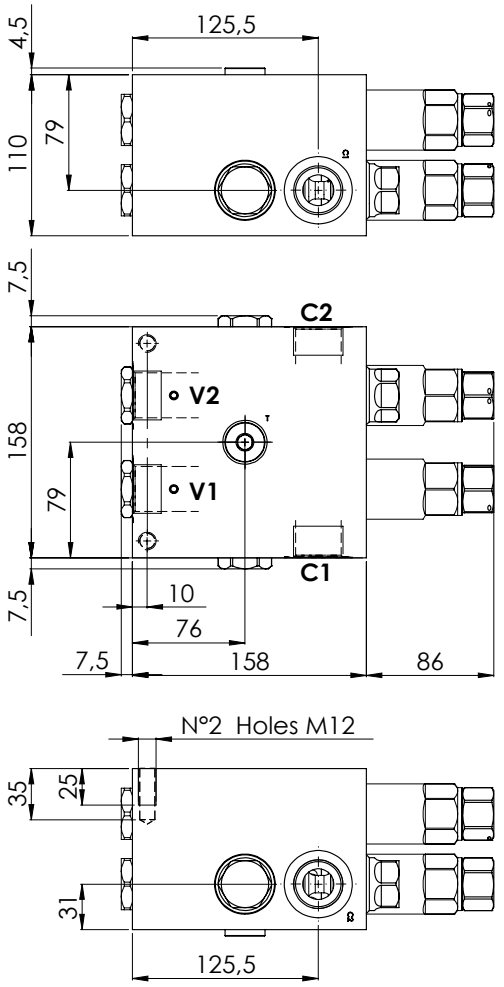

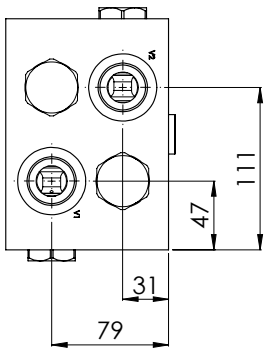

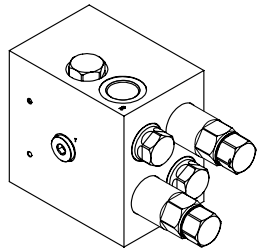

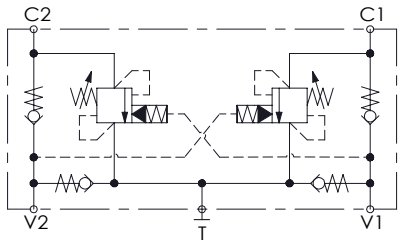

SPECIFICATIONS

Max. operating pressure:	**300 bar**
Rated flow:	**200 l/min**
Manifold:	**Aluminium**
Weight:	**9,51 kg**

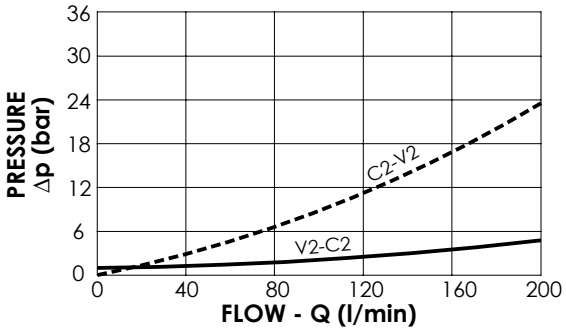

NOTES

Setting: at least 1.3 times the load induced pressure

ORDERING CODES

Quick code	Description	Pilot ratio	Main ports size	Standard setting (bar, Q=5 l/min)	Adjust. range (bar)	Pressure increase (bar/turn)
MN000020	**MNDN-200-LLST-08-G10-N300**	**8:1**	V1,V2,C1,C2: **G1"** T: **G1/2"**	**150**	**120-300**	**65**

MOTION CONTROL

MNDN-040-LLSV

STABILIZED WITH BRAKE RELEASE

ATLANTIC Fluid Tech

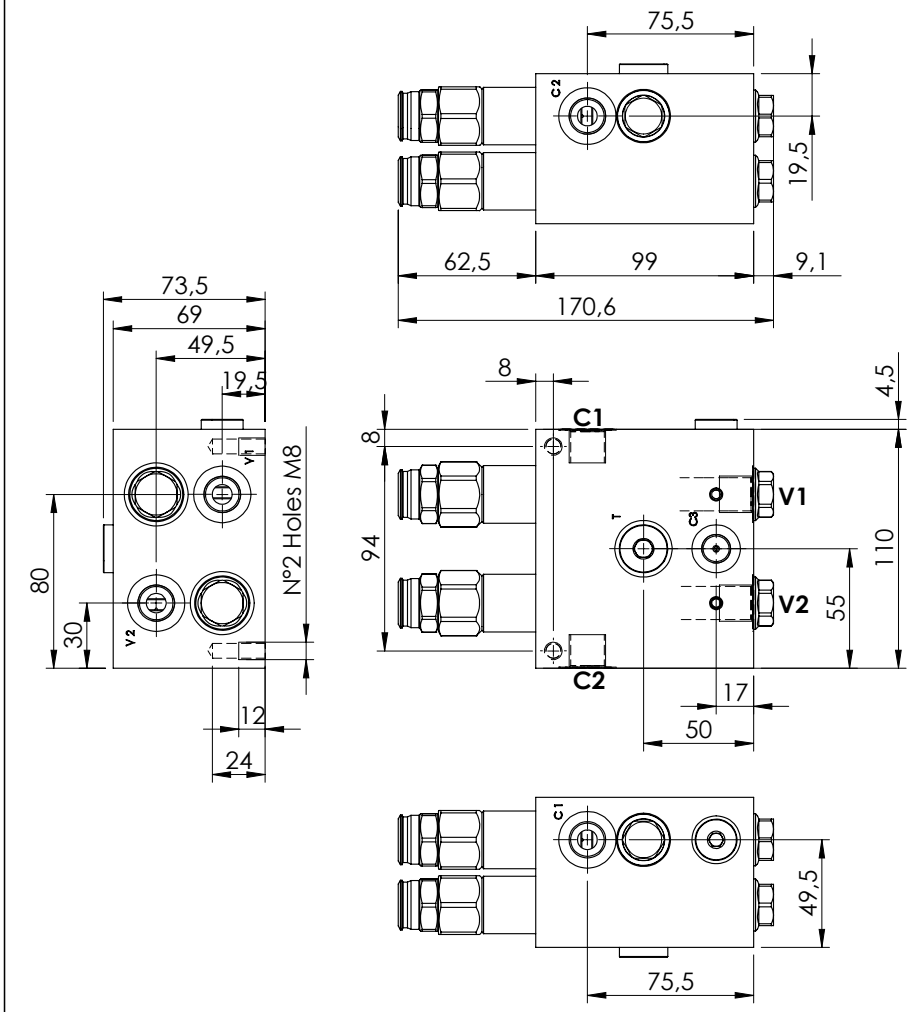

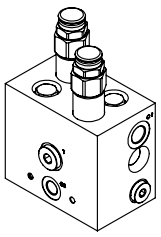

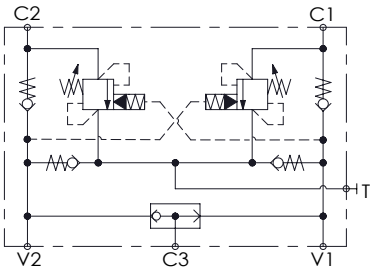

SPECIFICATIONS

Max. operating pressure:	**300 bar**
Rated flow:	**40 l/min**
Manifold:	**Aluminium**
Weight:	**2,66 kg**

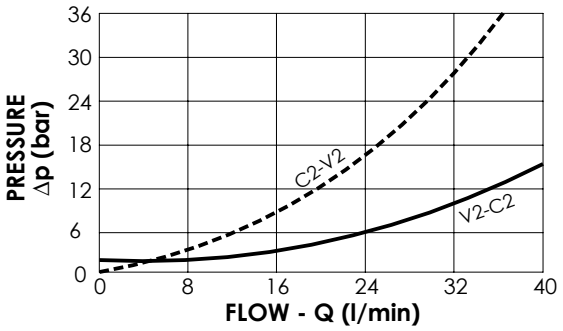

NOTES

Setting: at least 1.3 times the load induced pressure

ORDERING CODES

Quick code	Description	Pilot ratio	Main ports size	Standard setting (bar, Q=5 l/min)	Adjust. range (bar)	Pressure increase (bar/turn)
MN000008	**MNDN-040-LLSV-09-G38-N300**	**9:1**	V1,V2,C1,C2,T: **G 3/8"** C3: **G 1/4"**	**150**	**100-300**	**119**
MN000032	**MNDN-040-LLSV-09-G38-N200**	**9:1**	V1,V2,C1,C2,T: **G 3/8"** C3: **G 1/4"**	**150**	**70-150**	**63**
MN000033	**MNDN-040-LLSV-03-G38-N300**	**3:1**	V1,V2,C1,C2,T: **G 3/8"** C3: **G 1/4"**	**150**	**100-300**	**119**
MN000034	**MNDN-040-LLSV-03-G38-N200**	**3:1**	V1,V2,C1,C2,T: **G 3/8"** C3: **G 1/4"**	**150**	**70-150**	**63**

MOTION CONTROL

MNDN-120-LLSV

STABILIZED WITH BRAKE RELEASE

ATLANTIC Fluid Tech

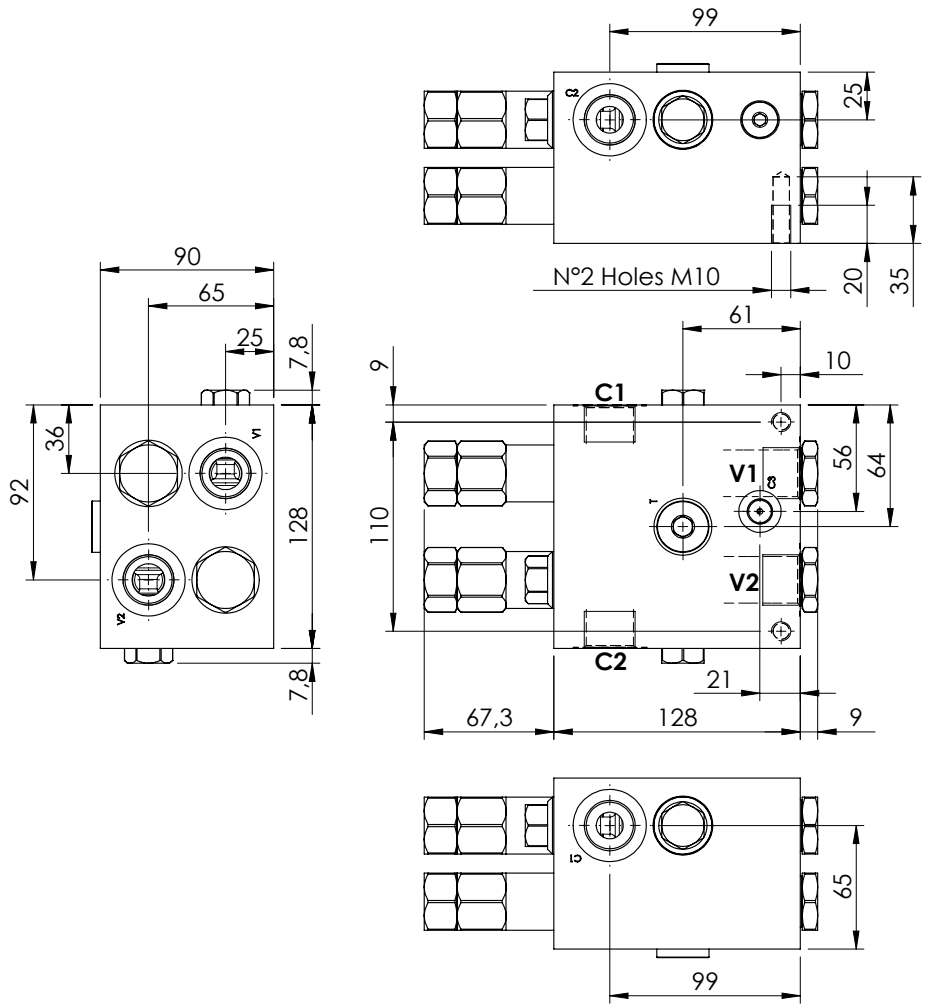

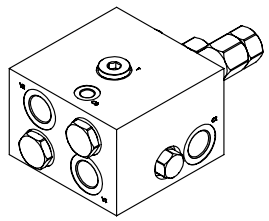

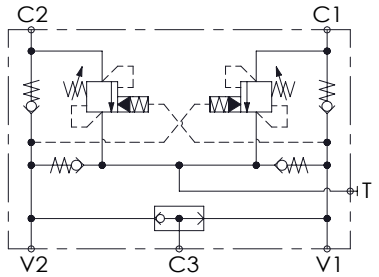

SPECIFICATIONS

Max. operating pressure:	**300 bar**
Rated flow:	**120 l/min**
Manifold:	**Aluminium**
Weight:	**5,03 kg**

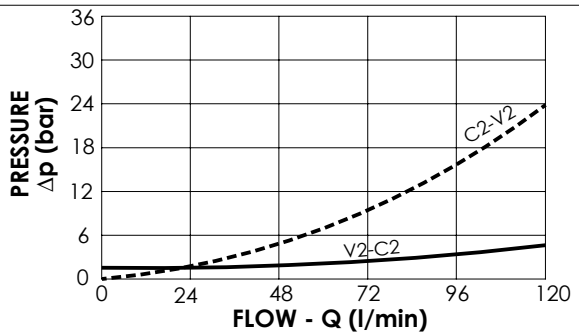

NOTES

Setting: at least 1.3 times the load induced pressure

ORDERING CODES

Quick code	Description	Pilot ratio	Main ports size	Standard setting (bar, Q=5 l/min)	Adjust. range (bar)	Pressure increase (bar/turn)
MN000014	**MNDN-120-LLSV-08-G34-N300**	**8:1**	V1,V2,C1,C2: **G 3/4"** T: **G 1/2"**; C3: **G 1/4"**	**150**	**100-300**	**111**
MN000015	**MNDN-120-LLSV-03-G34-N300**	**3:1**	V1,V2,C1,C2: **G 3/4"** T: **G 1/2"**; C3: **G 1/4"**	**150**	**100-300**	**111**

MOTION CONTROL

MNDN-200-LLSV

STABILIZED WITH BRAKE RELEASE

ATLANTIC Fluid Tech

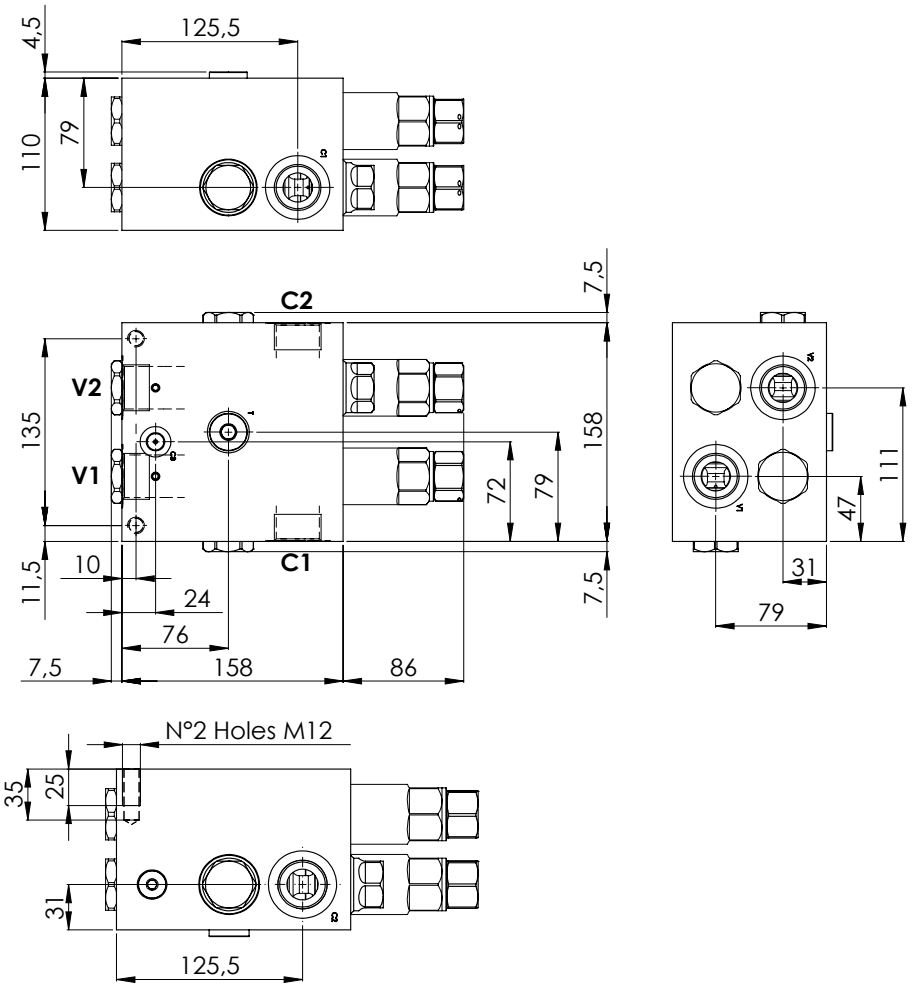

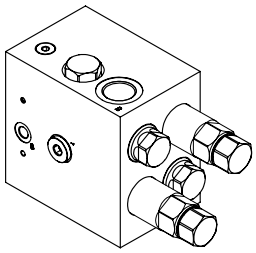

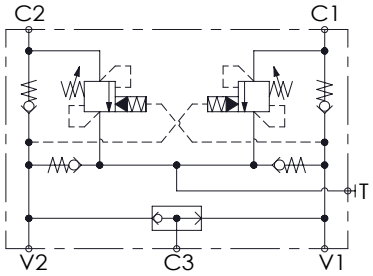

SPECIFICATIONS

Max. operating pressure:	**300 bar**
Rated flow:	**200 l/min**
Manifold:	**Aluminium**
Weight:	**9,51 kg**

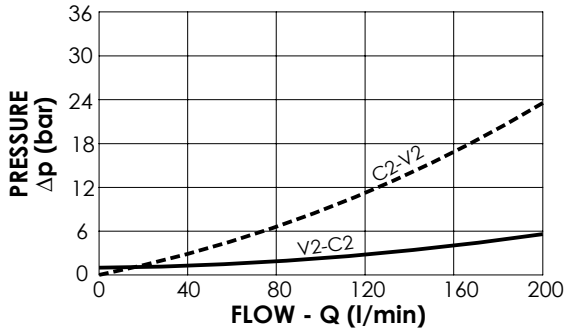

NOTES

Setting: at least 1.3 times the load induced pressure

ORDERING CODES

Quick code	Description	Pilot ratio	Main ports size	Standard setting (bar, Q=5 l/min)	Adjust. range (bar)	Pressure increase (bar/turn)
MN000021	**MNDN-200-LLSV-08-G10-N300**	**8:1**	V1,V2,C1,C2: **G1"** T: **G1/2"**; C3: **G 1/4"**	**150**	**120-300**	**65**

MOTION CONTROL

MNDN-040-LLPT

SOFT STOP DUAL SETTING

ATLANTIC Fluid Tech

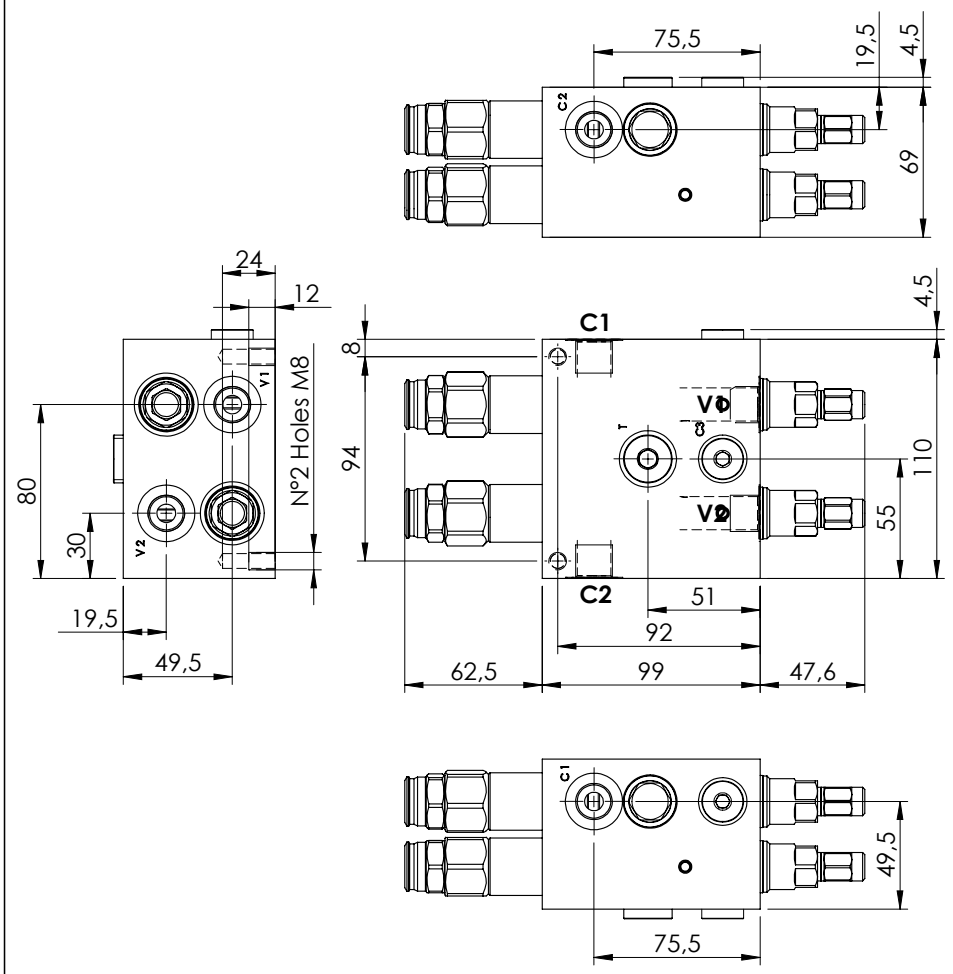

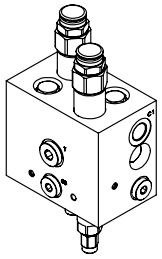

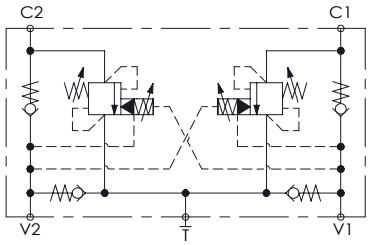

SPECIFICATIONS

Max. operating pressure:	**300 bar**
Rated flow:	**40 l/min**
Manifold:	**Aluminium**
Weight:	**2,78 kg**

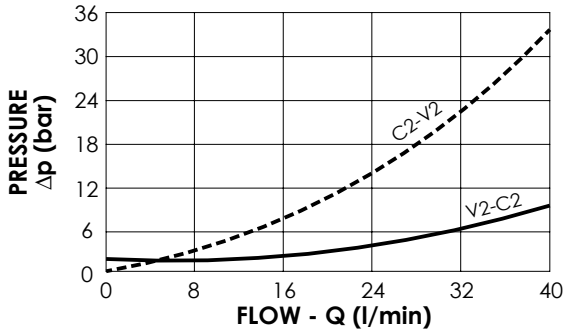

NOTES

Setting: at least 1.3 times the load induced pressure

ORDERING CODES

Quick code	Description	Pilot ratio	Main ports size	Standard setting (bar, Q=5 l/min)	Adjust. range (bar)	Pressure increase (bar/turn)
MN000024	**MNDN-040-LLPT-09-G38-N300**	**9:1**	V1,V2,C1,C2: **G3/8"** T: **G3/8"**	Start: **300** Brake: **120**	**100-300**	**119**

MOTION CONTROL

MNDN-120-LLPT

SOFT STOP DUAL SETTING

ATLANTIC Fluid Tech

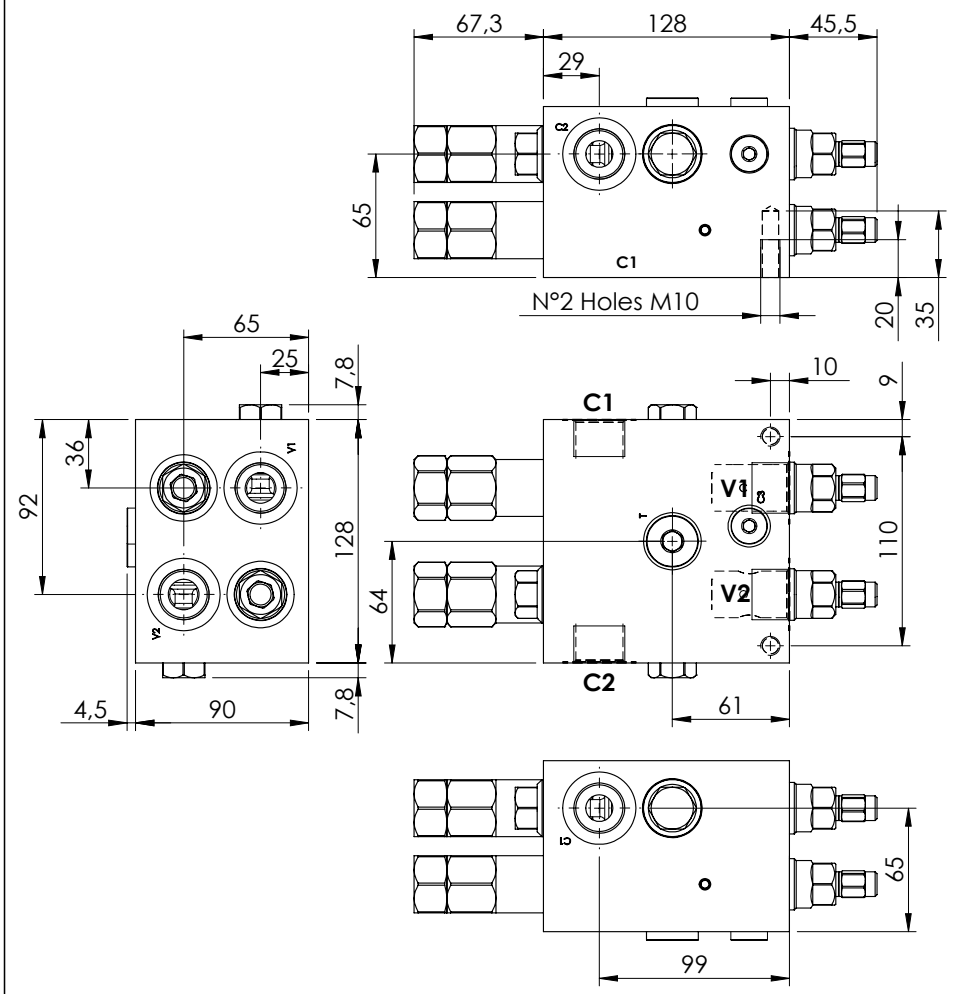

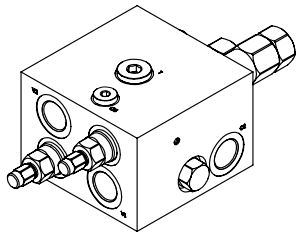

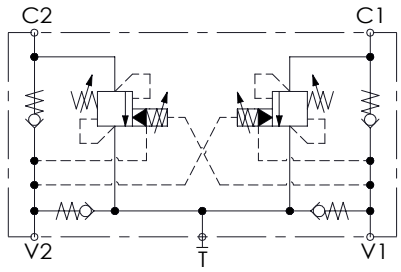

SPECIFICATIONS

Max. operating pressure:	**300 bar**
Rated flow:	**120 l/min**
Manifold:	**Aluminium**
Weight:	**5,14 kg**

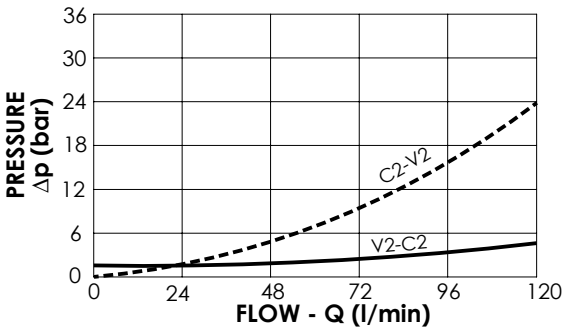

NOTES

Setting: at least 1.3 times the load induced pressure

ORDERING CODES

Quick code	Description	Pilot ratio	Main ports size	Standard setting (bar, Q=5 l/min)	Adjust. range (bar)	Pressure increase (bar/turn)
MN000017	**MNDN-120-LLPT-08-G34-N300**	**8:1**	V1,V2,C1,C2 : **G3/4"** T : **G 1/2"**	Start: **300** Brake: **120**	**100-300**	**111**
MN000031	**MNDN-120-LLPT-03-G34-N350-T**	**8:1**	V1,V2,C1,C2 : **G3/4"** T : **G 1/2"**	Start: **350** Brake: **120**	**100-350**	**111**
MN000047	**MNDN-120-LLPT-03-G34-N300**	**3:1**	V1,V2,C1,C2 : **G3/4"** T : **G 1/2"**	Start: **300** Brake: **120**	**100-300**	**111**
MN000016	**MNDN-120-LLPT-03-G34-N200**	**3:1**	V1,V2,C1,C2 : **G3/4"** T : **G 1/2"**	Start: **180** Brake: **90**	**70-210**	**73**

MOTION CONTROL

MNDN-200-LLPT

SOFT STOP DUAL SETTING

ATLANTIC Fluid Tech

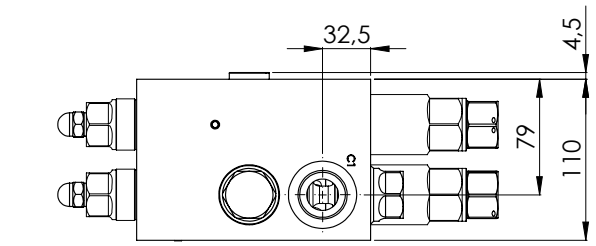

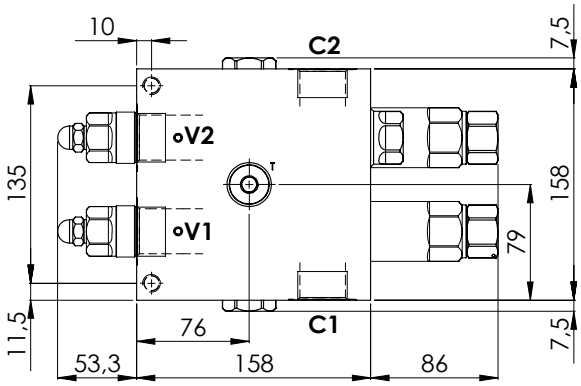

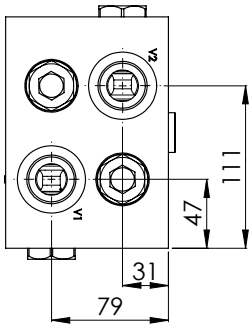

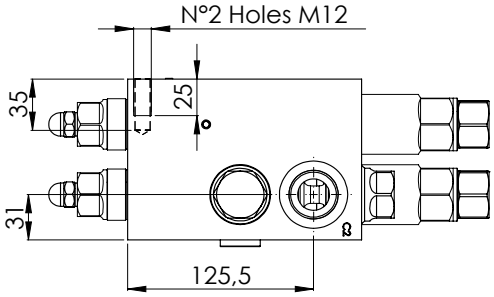

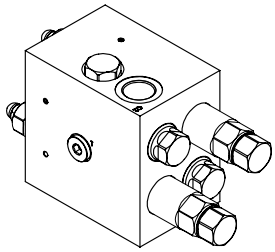

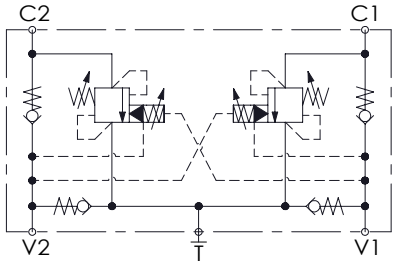

SPECIFICATIONS

Max. operating pressure:	**300 bar**
Rated flow:	**200 l/min**
Manifold:	**Aluminium**
Weight:	**9,8 kg**

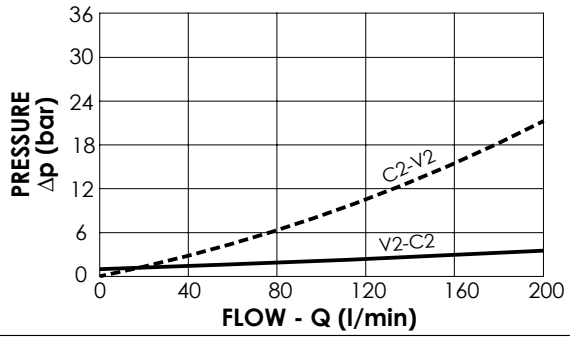

NOTES

Setting: at least 1.3 times the load induced pressure

ORDERING CODES

Quick code	Description	Pilot ratio	Main ports size	Standard setting (bar, Q=5 l/min)	Adjust. range (bar)	Pressure increase (bar/turn)
MN000004	**MNDN-200-LLPT-08-G10-N300**	**8:1**	V1,V2,C1,C2 : **G1"** T : **G1/2"**	Start: **300** Brake: **120**	**120-300**	**65**

MOTION CONTROL

MNDN-040-LLPV

SOFT STOP
DUAL SETTING
WITH BRAKE RELEASE

ATLANTIC Fluid Tech

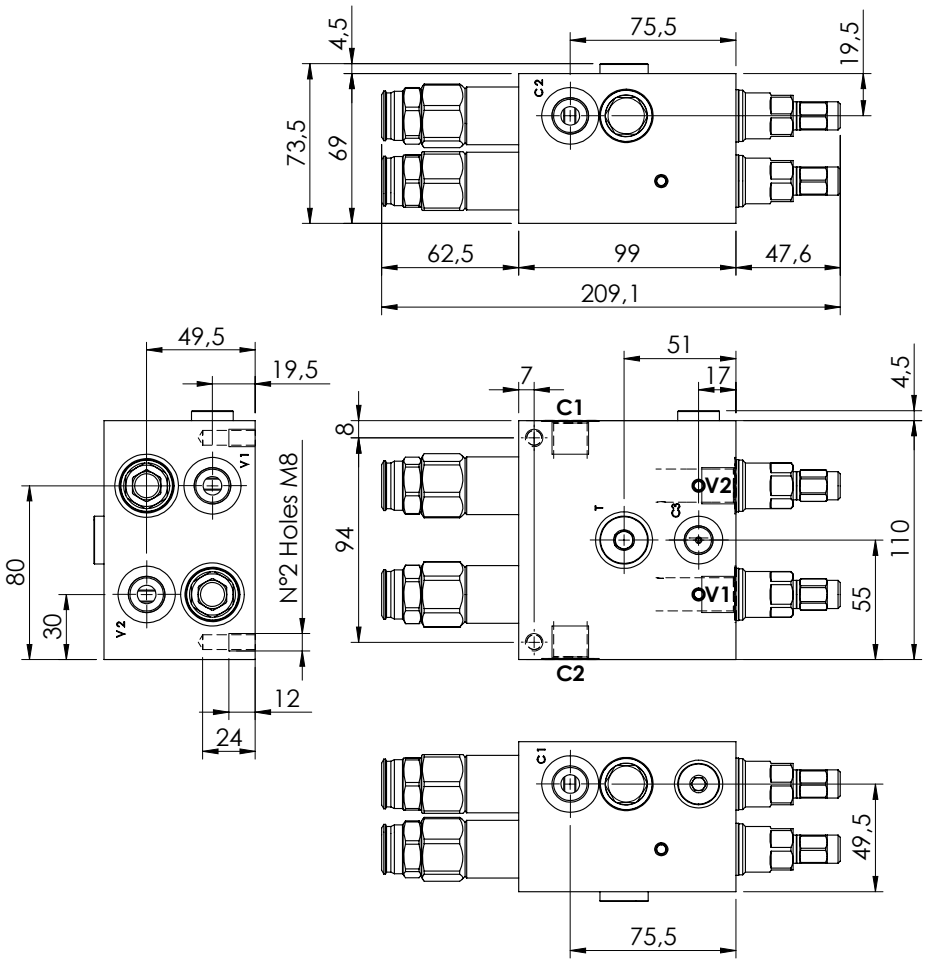

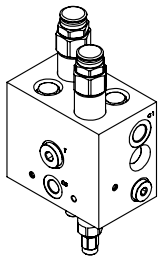

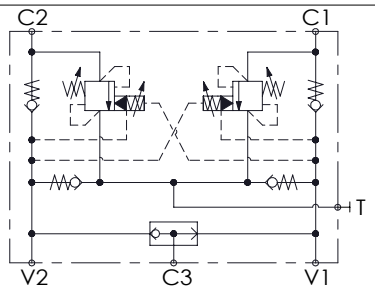

SPECIFICATIONS

Max. operating pressure:	**300 bar**
Rated flow:	**40 l/min**
Manifold:	**Aluminium**
Weight:	**2,76 kg**

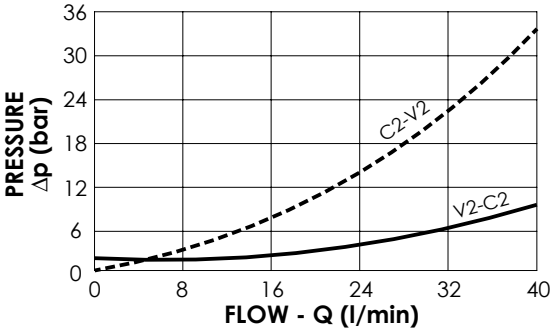

NOTES

Setting: at least 1.3 times the load induced pressure

ORDERING CODES

Quick code	Description	Pilot ratio	Main ports size	Standard setting (bar, Q=5 l/min)	Adjust. range (bar)	Pressure increase (bar/turn)
MN000019	**MNDN-040-LLPV-09-G38-N300**	**9:1**	V1,V2,C1,C2,T: **G 3/8"** C3 : **G 1/4"**	Start: **300** Brake:**120**	**100-300**	**119**
MN000028	**MNDN-040-LLPV-09-G38-N200**	**9:1**	V1,V2,C1,C2,T: **G 3/8"** C3 : **G 1/4"**	Start: **200** Brake: **90**	**60-210**	**63**

MOTION CONTROL

MNDN-120-LLPV

SOFT STOP
DUAL SETTING
WITH BRAKE RELEASE

ATLANTIC Fluid Tech

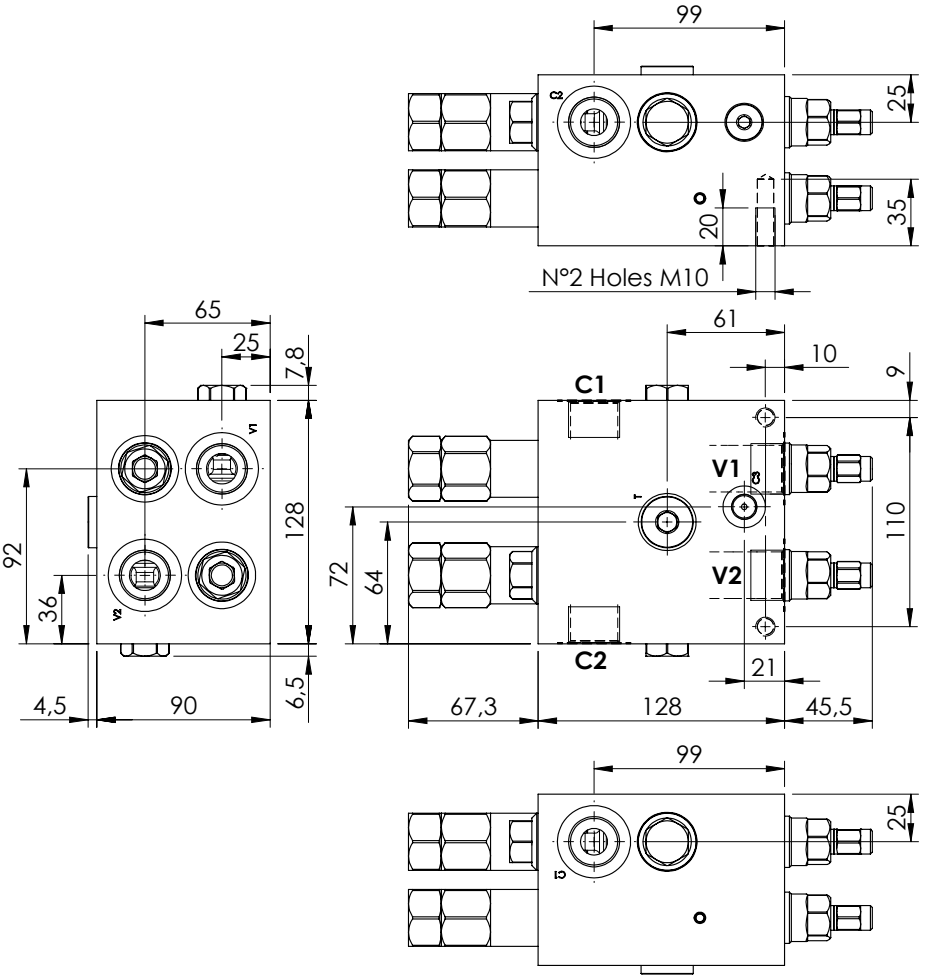

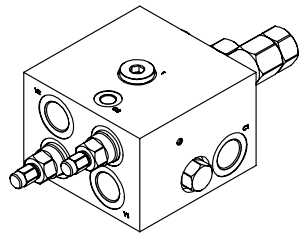

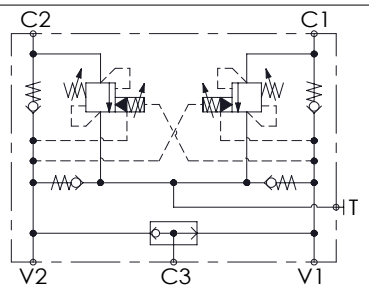

SPECIFICATIONS

Max. operating pressure:	**300 bar**
Rated flow:	**120 l/min**
Manifold:	**Aluminium**
Weight:	**5,12 kg**

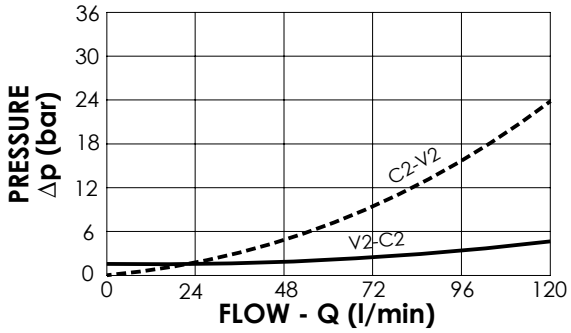

NOTES

Setting: at least 1.3 times the load induced pressure

ORDERING CODES

Quick code	Description	Pilot ratio	Main ports size	Standard setting (bar, Q=5 l/min)	Adjust. range (bar)	Pressure increase (bar/turn)
MN000010	**MNDN-120-LLPV-08-G34-N300**	**8:1**	V1,V2,C1,C2: **G 3/4"** T: **G 1/2"** ; C3: **G 1/4"**	Start: **300** Brake: **120**	**100-300**	**111**
MN000001	**MNDN-120-LLPV-08-G34-N200**	**8:1**	V1,V2,C1,C2: **G 3/4"** T: **G 1/2"** ; C3: **G 1/4"**	Start: **180** Brake: **90**	**70-210**	**73**
MN000018	**MNDN-120-LLPV-03-G34-N300**	**3:1**	V1,V2,C1,C2: **G 3/4"** T: **G 1/2"** ; C3: **G 1/4"**	Start: **300** Brake: **120**	**100-300**	**111**
MN000048	**MNDN-120-LLPV-03-G34-N200**	**3:1**	V1,V2,C1,C2: **G 3/4"** T: **G 1/2"** ; C3: **G 1/4"**	Start: **180** Brake: **90**	**70-210**	**73**

MOTION CONTROL

MNDN-200-LLPV

SOFT STOP
DUAL SETTING
WITH BRAKE RELEASE

ATLANTIC Fluid Tech

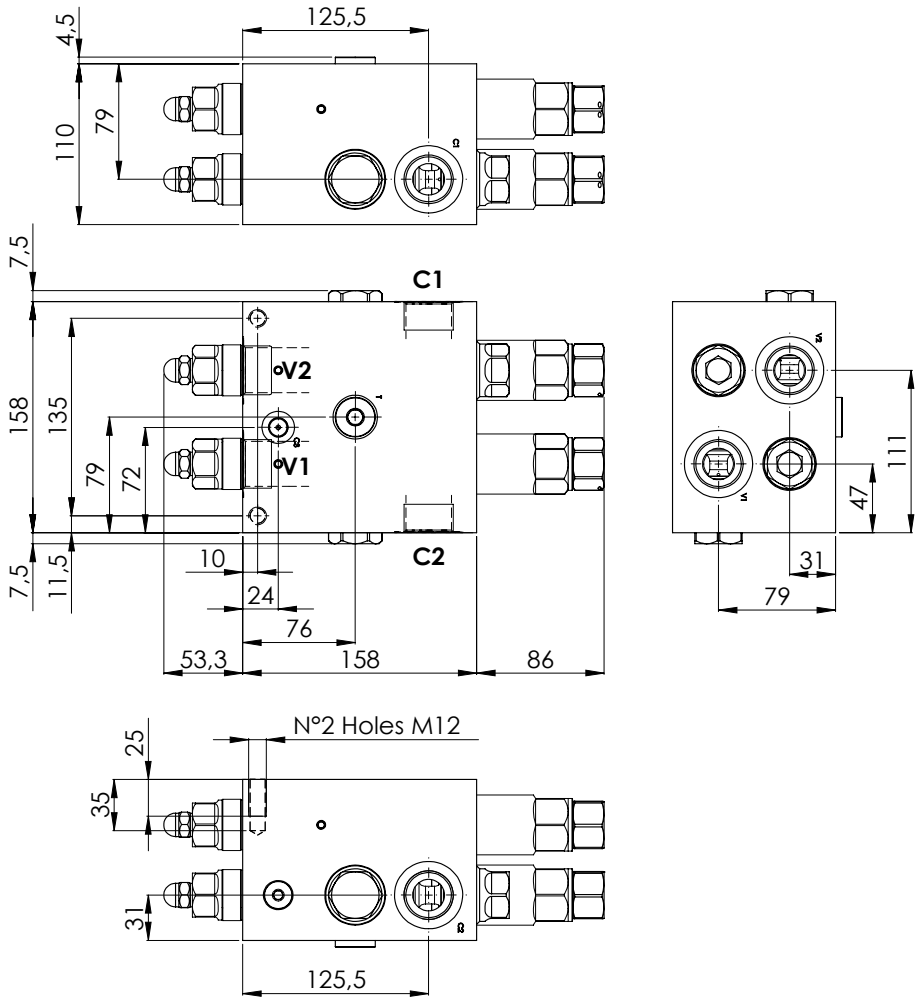

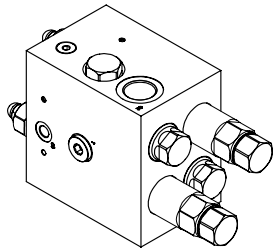

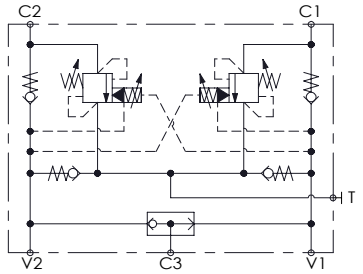

SPECIFICATIONS

Max. operating pressure:	**300 bar**
Rated flow:	**200 l/min**
Manifold:	**Aluminium**
Weight:	**9,81 kg**

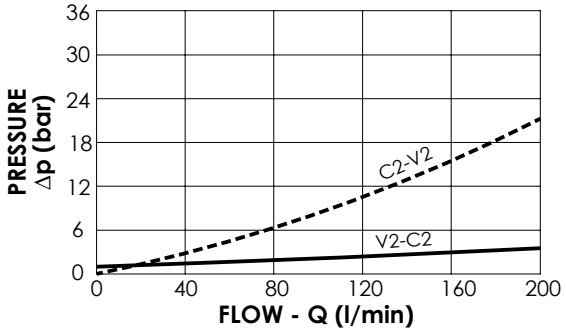

NOTES

Setting: at least 1.3 times the load induced pressure

ORDERING CODES

Quick code	Description	Pilot ratio	Main ports size	Standard setting (bar, Q=5 l/min)	Adjust. range (bar)	Pressure increase (bar/turn)
MN000022	**MNDN-200-LLPV-08-G10-N300**	**8:1**	V1,V2,C1,C2 : **G1"** T : **G1/2"**; C3 : **G 1/4"**	Start: **300** Brake: **120**	**120-300**	**65**

ATLANTIC
Fluid Tech

TECHNICAL

Specifications

MANAGEMENT SYSTEM CERTIFICATION
DNV·GL
ISO 9001 = ISO 14001
OHSAS 18001

TECHNICAL SPECIFICATIONS

Modena, 05/04/2018

MATERIALS

CARTRIDGES AND INTERNAL COMPONENTS: Cartridge bodies are manufactured from high grade cold drawn steel bar, all of the external parts are zinc plated for longer durability in challenging environments. The valve's internal working parts are hardened and ground (or lapped) for maximum performance and durability.

MANIFOLDS: Cartridges, parts in body valve manifolds and integrated circuit blocks are manufactured from high strength aluminum bars and high quality steel. As a standard, steel manifolds are always zinc plated (Crome 3 treatment) whilst aluminum bodies can be anodized upon request. For complete specifications and compatibilities, please consult our Engineering department.

For pressures above 210 bar we recommend using steel bodies. In most cases the aluminum bodies are strong enough, but if transient peak pressures are frequently encountered, there is the possibility of fatigue cracks.

COILS: the external encapsulating material of our coils is made of class H thermoplastic compound as well as internal copper wire.

PORTS

The standard port dimension on our valves, when not flanged, is BSPP size, ranging normally between G1/4" and G1-14". SAE 'O' Ring and NPT ports are available on request, as well as special flange dimensions.

SEALS, BACK-UP RINGS AND SLIDE RINGS

We use Acryl-Nitrile Butadiene NBR (BUNA-N) seals as standard for temperatures between -30°C and +100°C. Viton seals or other compounds are available on request.

Back-up rings and slide rings are made of reinforced poly-tetrafluoroethylene (PTFE).

STORAGE OF NEW VALVES

The valves must be stored in their original plastic envelopes or cartoon boxes. In a dry, dust-free atmosphere, free of corrosive agents, with a low moisture content and no large variations in temperature. They should not be exposed to direct sun light or sources of heat or ozone (as this could cause the fast wearing of valve seals). Storage temperature must be between -20°C and +50°C.

HANDLING AND INSTALLATION OF VALVES

We recommend the installation and the use of our valves be carried out by expert and qualified people with perfect knowledge of the product. AFT will not be responsible for improper use of its products. For any clarification please contact AFT sales network.

The valve handling must be done in accordance with the weight of the box and of the valve itself, for more information please refer to your Country rules. Valves over a specific weight are equipped with threads where a hook can be installed; in this way the valve can be attached and lifted using mechanical devices.

FLUIDS AND WORKING TEMPERATURE RANGE

The recommended fluid is mineral oil based fluid, such as HL type (DIN 51524 part 1) or HLP type (DIN 51524 part 2) with an operating viscosity between 10 and 380 cSt. High viscosity and low temperatures may lead to a slower valve response than in warm oil conditions.

For water based fluids, such as 95/5 and 60/40 emulsions, please consult AFT sales network.

Fluid working temperatures should be maintained between -30°C and +100°C. For other working conditions, please consult AFT sales network.

FUNCTIONAL TEST

All the valves we sell are subjected to functional tests. The tests are carried out using ISO VG 46 hydraulic oil (viscosity of 46cSt at 40°C) and with oil temperature between 30 and 40 °C.

FILTRATION

Our valves are precision-machined mechanical components: the majority of valves failures (during normal working conditions) occurs due to hydraulic circuit contamination. We recommend the following filtration levels:

SYSTEM WORKING PRESSURE:	NOM. FILTRATION	CONTAMINATION CLASS:	
> 250 BAR:	10 µm	**ISO 4406**: 17/14	**NAS 1638**: 8
BETWEEN 100-250 BAR:	15 µm	**ISO 4406**: 18/14	**NAS 1638**: 9
< 100 BAR:	25 µm	**ISO 4406**: 19/15	**NAS 1638**: 10-11

INTERNAL LEAKAGE

Many of our valves have a leak proof seat design: this means that the maximum allowed oil leakage value is 1 cc/min (about 15-20 drops/min) measured with 46cSt oil at 40°C at the maximum permitted pressure. However, normal leakage is found to be less than 10 drops/min and tends to decrease or disappear after few seconds of rest. These are within the acceptable limits, note however that each type of valve has different performances depending on its design: please refer to our Engineering dept. for information about each valve type.

VALVE SETTING AND TAMPERPROOF DEVICES

SETTING: Our valves are supplied Factory set as stated on the corresponding catalogue page. The adjustment range and maximum setting figures shown on the catalogue are the safe limits according to each valve specific design: in the majority of cases higher or lower values can be attained. Any setting changes should be approved in writing prior by our Engineering dept. Any setting change must be carried out using an appropriate gauge or pressure/flow measuring equipment.

TAMPERPROOF: The majority of our cartridges and parts in body valves have the possibility to be equipped with a plastic tamperproof cap to prevent any undesired modification of valve setting: please refer to each catalogue page for the choice of the correct cap. On request, valve can be supplied already Factory set and sealed.

CARTRIDGE VALVE INSTALLATION

The correct machining of cavities is critical in ensuring the best performance of our cartridges. Cavity tools are available for sale and cavity drawings can be found in the specific section of our catalogue or requested from our Engineering dept.

To correctly install cartridges into their cavity, please follow this procedure:

- Check that external seals and back-up ring are correctly fitted and without damage;
- Ensure the cavity and cartridge body are clean and without any visible contamination;
- If necessary, immerge cartridge body into clean oil to take away any impurity and to lubricate the seals;
- Screw the cartridge into its cavity by hand, until mechanical contact is reached, being sure that during tightening that there is no abnormal friction between the cartridge and its cavity;
- Tighten the cartridge with a calibrated torque wrench applying the correct torque as specified on the corresponding catalogue page.

TORQUE FIGURES
So as to ensure correct cartridge behavior and to prevent any internal friction the correct torque must always be applied when fitting cartridges into their cavities: the correct torque values can be found on each cartridges' catalogue page.

COILS

ED RATE: All our coils are rated ED 100%, they can remain 100% energized through out the working cycle, provided the nominal voltage and maximum ambient temperatures are not exceeded.

TEMPERATURE CLASS: As standard the encapsulating material and copper wire are rated CLASS H: this means that the ambient temperature + temperature rise due to coil operation cannot exceed 180 °C. Class F coils are available on request (maximum 155 °C). The external surface of the coil can easily reach very high temperatures after long energizing period (80-100°C): Particular care must be taken to avoid accidental injuries to workers and operators. To prevent premature burning of the coils, it is requested that coils are installed in such a way to aid air ventilation around them and thus preventing excessive heating of the surrounding ambient.

IP PROTECTION CLASS: The standard insulation class of our coils is IP65, provided that all the seals between coil and solenoid cartridge tube/nut and between coil and connector are correctly fitted. Coils with Deutsch connector are rated with an IP69K insulation class.

INLET VOLTAGE: Our coils normally accept inlet voltage fluctuations of between ±10% without any compromise to normal functionality (unless specified on the coil catalogue page). If specific inlet voltages are required, please refer to our Engineering dept.

POWER SUPPLY: Our solenoid operated cartridges are designed to operate with DC (direct current) power supply: in case of AC (alternate current) applications, please apply between power supply and coil a current rectifier and use the proper RAC (rectified alternate current) coil.

ENVIRONMENTAL CARE AND PRODUCTS DISPOSAL

AFT products are made mainly with metallic materials; steel, aluminum, cast iron and plastic materials (ABS, PTFE, NBR) that can be recycled after being cleaned of hydraulic fluids if present.

Our packaging materials are made mainly of paper, cardboard, wood, plastic and polyethylene which can be recycled after being cleaned from hydraulic fluids if present.

Hydraulic fluids must be disposed of in accordance with the laws and procedures of each country.

During handling, installation and use it is necessary to avoid the dispersion of hydraulic fluid into the environment, in case of accidental dispersion it is necessary to follow your local rules.

Engineering Department
ATLANTIC Fluid Tech

ATLANTIC
Fluid Tech

GENERAL

Terms of Supply

MANAGEMENT SYSTEM CERTIFICATION
DNV·GL
ISO 9001 = ISO 14001
OHSAS 18001

GENERAL TERMS OF SUPPLY – OUTLINE AGREEMENT

San Cesario Sul Panaro (MO): 31/10/2011

1 SUBJECT

The present general terms of supply (or outline agreement) have been drafted to regulate all the supply relations existing between Vendor and Customer, which will be conducted at the conditions hereinafter described and/or on the basis of any additional agreements specifically entered into between the parties.

If these general terms of supply should contain any clauses or prescriptions that conflict with specific conditions of supply agreed between the parts, these latter shall prevail.

2 CUSTOMER ORDERS

The Customer's orders must be transmitted to the Vendor in written form (also via fax, or using telecommunications and electronic means) and must contain the following information:

a) date and place of issue of the order;
b) exact denomination of the Customer company and its complete address;
c) a reference to the relative offer made by the Vendor company (if such an offer exists);
d) complete Vendor's identification code, with a description of the product ordered if necessary and the relative technical specifications of all the products to which the order refers;
e) the required quantities;
f) the agreed prices (if available);
g) the quality requirements with which the Vendor must comply in execution of the order;
h) the signature of an authorised representative;
i) the required term of delivery;
l) terms of payment;
m) shipping agent.

Orders are intended as accepted when the relative order confirmation duly signed by the Vendor arrives at the registered address of the Customer, or if such a document is not forthcoming, orders will be considered to be confirmed by the Vendor at the terms of supply specified herein if they are not explicitly refused in writing within the term of 10 working days from the date of the order in question.

2.1 PRICES

The prices established by the Vendor and/or agreed upon with the Customer shall remain fixed for the entire period of the order or for the agreed period; said period shall not be subject to modification except in the presence of exceptional events and/or causes of force majeur (e.g. uncontrolled price increases of raw materials or energy, etc.); in such cases new agreements will be entered into with customers.

3 EXECUTION OF THE CONTRACT OF SUPPLY - AMENDMENTS

The terms of the contract of Supply are intended as final and executive when:

- the Customer transmits to the Vendor the purchase order in written form relative to the ordered product, specifying the requirements set down in heading 2 above;
- the Vendor has issued its Order confirmation and transmitted it to the Customer, or has failed to refuse the order in writing within 10 working days from the date of the order in question (See heading 2).

Once the contract has been signed, it must be fully and duly executed by the parties. Any amendments or cancellations of the contract can only take place further to the stipulation of agreements between the parties (Vendor and Customer) that take into account, on a reciprocal basis, any possible compensation for reimbursement of expenses sustained (materials, labour, etc.) to be paid to the more diligent party that receives such a request for amendment or cancellation.

In any event, the Customer is entitled to request modifications relative to orders it has already issued in relation to the quantity and/or characteristics of the ordered products, by means of the issue and transmission to the Vendor of a specific order variant, which shall be construed as implicitly accepted by the Vendor if this latter fails to raise any objections within the term of 10 working days from the receipt of such an order variant.

The execution of the contract of supply can be suspended and/or cancelled, also without notice to the customer, due to causes of force majeur (e.g. grave natural disasters, social unrest, epidemics, etc.) that are outside the Vendor's control.

4 TECHNICAL MODIFICATIONS

Except in the presence of contrary agreements with Customers, the Vendor can make technical modifications to the product specifications without notice; in any event, the Vendor undertakes to execute customer orders/contracts that are already confirmed without applying any modifications and/or anyway guaranteeing interchangeability of the relative products.

5 PRODUCT QUALITY AND VERIFICATION OF CONFORMITY

All the products are subject to the necessary checks/tests in the various production phases in order to guarantee conformity with the specifications and calibrations indicated in the catalogues, drawings, and/or technical datasheets; moreover, the Vendor's production process complies with the Quality System requirements defined by UNI EN ISO 9001, certified by an accredited Institute. The Customer is entitled make visits to and to carry out quality audits at the Vendor's plant after arranging an appointment for such occasions.

Because of the large range of technical features and operating conditions of the equipment manufactured by the Customer, the Vendor shall not assume any liability for the results of tests performed by third parties. The Customer is therefore responsible for the final choice of the valve and for the adoption of all the measures required to achieve the required functional and safety specifications on the system in which the valve is to be installed, in addition to the compliance with any specific standards applicable to the system in question.

In the event of nonconforming products the responsibility for which can be attributed to the Vendor, in addition to the warranty actions provided for in the following article 6, the Customer can demand that the Vendor perform the necessary corrective actions in order to improve its level of quality rapidly.

5.1 "FIRST SPECIMENS" CHECK

For new special products made to Customer's specifications or customised to a significant extent with respect to the equivalent standard products, when so requested by the Customer the Vendor can, further to prior agreement with the Customer, carry out checks on "First Specimens"; this procedure entails the supply of "Prototypes or Specimens" of Products accompanied by Test Certificates detailing dimensional checks and functional tests evaluating diverse technical aspects.

In this case the Customer's validation of subsequent supplies must be performed on the basis of the "First Specimens".

6 WARRANTY

The Vendor provides a warranty to the first Customer covering its valves against defects in material or workmanship for a period of 24 months from the time of first assembly, provided said first assembly takes place within 6 months from the date of manufacture as marked on the valve, and provided the valve is installed and utilised in accordance with the conditions of use prescribed by the Vendor and/or in compliance with the standards adopted in accordance with industrial best practices. Seals and O-rings are expressly excluded from the warranty.

This warranty is applicable exclusively to the first Customer/Purchaser of the Vendor's products and is not transferable.

In the event that the Customer considers that the goods or a part of the goods are defective for causes attributable to the Vendor, the Customer shall signal/protest the presence of the alleged defects by sending a detailed written report, thereby allowing the Vendor to verify the effective existence of the claimed defects/flaws by means of inspections performed by its technical personnel.

Having ascertained that the claimed defects are effectively present and having accepted that they are attributable to the fault of the Vendor, this latter undertakes to repair or replace the goods in question in a reasonable time interval and/or inform the Customer of the cause of such defects.

This warranty is not applicable to products that have been subject to conditions of contamination in the customer's hydraulic circuit, or to products that are incorrectly utilised or subject to tampering performed without the Vendor's supervision or authorisation.

The Vendor's warranty does not envisage pecuniary compensation or credit notes in respect of defective material; specifically, the Vendor shall not be held responsible under any circumstances for loss of earnings, costs of disassembly and reassembly of the product, for any damages connected with such an operation, and for any whatsoever cost relative to the installation of the repaired or replaced valves, including the costs arising in relation to system outages.

If the product supplied is to be assembled in plants potentially capable of causing third party damages of a magnitude that is significantly greater than the price of the product, it is the Customer's responsibility to adopt all the possible safety measures to avoid any such damage, since it is aware that series production of valves at market prices leads to the risk, albeit negligible, of the possible presence of defective parts.

If the Customer embarks on a recall or remediation campaign of its own machines, on any whatsoever market, in order to replace or repair parts that have been ascertained to be defective, this action will be undertaken on the basis of bilateral agreements to be defined.

If the Customer is subjected to legal proceedings for "civil product liability" or if it is accused of violation of legal prescriptions connected to the Vendor's products, the Customer must inform the Vendor immediately of such a situation, and the Vendor shall participate in the analysis of the problem in collaboration with the Customer.

Wherever considered necessary, specific agreements can be stipulated between Customer and Vendor as an alternative to the foregoing warranty procedures.

6.1 SUPPLY QUALITY OBJECTIVES

Specific supply quality objectives may be established in certain cases, to be agreed with Customers; in such cases the Vendor undertakes to cooperate with the Customer in order to define all the aspects necessary to fulfil the objectives in question, and the necessary actions that must be undertaken when such objectives are not achieved.

The possibility of economic recourse or penalties applied by the Customer in relation to the value of the supplies is not contemplated under any circumstances.

7 TECHNICAL ASSISTANCE

The Vendor guarantees to the Customer its availability to perform joint analyses, free of charge, of any defects reported by end users, also when such analyses are be carried out on the Customer's site; in this case, if the defectiveness is attributable to the responsibility of the Customer, the Vendor will issue a debit note relative to its services rendered. When the Customer requires the assistance of the Vendor's technical personnel on its sites it must make a written request to this effect (which can be transmitted also by e-mail or fax).

8 PRESCRIPTIONS OF INTENDED USE.

The Customer is expressly prohibited from using the products sold by the Vendor for purposes other than those set down in the offer or in the catalogues.
Specifically, the Vendor's Dealers or Agents are not authorised to approve the use of the products supplied for the following applications:

- systems for road vehicles for the transport of passengers or goods and subject to safety Standards and Directives, such as (without limitation) steering systems and brake systems
- aircraft or spacecraft;
- military equipment;
- rescue or emergency equipment or vehicles;
- systems to be used in conjunction with atomic installations;
- systems for use in explosive or otherwise hazardous environments.

If the Customer intends to use the goods supplied for any applications falling into one or more of the above categories or other similar categories, or for any applications other than those expressly described in the documentation, or in the presence of doubts concerning the intended application, it must seek prior specific approval directly from the Manufacturer and await the receipt of written authorisation for the intended application before proceeding.

Any damage suffered by the Customer or third parties arising from failure to comply with the terms of the prescriptions as at the foregoing subsections, or due to the failed observance of the specifications/directions for use supplied by the Vendor in the pages of its catalogue or in the assembly drawings, will be borne entirely by the Customer.

9 OBLIGATION OF DILIGENCE OF THE CUSTOMER IN THE PREVENTION OF DAMAGE IN THE CONTEXT OF ITS OWN PRODUCTION PROCESS.

If the product is utilised in a production process in such a way that any defects in the supplied product could give rise to substantial damages to the Customer or third parties deriving from production plant downtimes, the Customer undertakes to acquire a sufficient number of the parts in question to replace any faulty parts, and further undertakes to engineer the production process in such a way that such replacements can be carried out quickly and easily. In any event, the Vendor undertakes to repair or replace any parts that are found to be defective due to causes for which it is ascertained to be responsible.

10 DISCREPANCIES BETWEEN THE CONTENTS OF THE CUSTOMER OFFER AND THE PRESCRIPTIONS OF THE PRESENT TERMS OF SUPPLY.

Any aspects or conditions specified in the Customer Order that depart from contents of the present of terms of supply will be disregarded and construed as automatically replaced by the terms and conditions stated herein.

11 EXECUTION OF SUPPLIES ARRANGED PRIOR TO THE ACCEPTANCE OF THESE GENERAL TERMS.

If the supply is executed before the present general terms have been accepted by the Customer, the contract of supply shall be construed as having been entered into at the general terms and conditions specified on the back of the invoice and the delivery note, unless the Customer returns the goods to the Vendor, carriage forward, in exactly the same condition in which they were shipped within the term of 5 working days from the date of their receipt.

12 DELIVERY - DOCUMENTATION

Except in the presence of contrary agreements entered into between the parties, reference must be made in respect of the terms of delivery, to the terms specified by the Vendor in its Order Confirmation. At the order confirmation stage the Vendor can propose changes to the requested delivery date on the basis of its internal production requirements. The Customer reserves the right to accept or refuse the proposed modifications on the basis of its own requirements.

Any delivery terms specified in the Customer's orders or in other written documents exchanged between the parties shall not be considered to be binding except in the presence of a specific written agreement to such effect.

If the Customer intends to rescind from the contract and/or advance claims for compensation for damages further to failed observance of the terms of delivery, it must notify the Vendor expressly of such intentions at the time it transmits the order, and it must request an explicit confirmation from the Vendor specifying that it accepts such conditions.

All shipments will be sent with an attached delivery note bearing the following information: the order number, vendor's product code and Customer code (when required and present), description, quantity, identity of the shipping agent, and details concerning the transport means, number of items of packing, gross weight, etc.; the availability of this information serves to allow rapid correlation of the incoming goods with the shipping documents.

The Customer undertakes to inspect the goods delivered within and no later than 10 (ten) days from the time of receipt and it will automatically waive its rights to claim for missing items or manifest defects of the goods if it fails to declare such circumstances within the same 10 (ten) days from the time of receipt.

13 TRANSPORT

Except in the presence of contrary written agreements between the parties, the means of transport and the carrier will be chosen by the Customer.

Transport costs are charged to the Customer, which is required to refund them to the Vendor in the event that this latter party is obliged to pay them in advance on the Customer's account.

If the Customer fails to specify the required carrier and means of transport, these aspects can be chosen freely at the discretion of the Vendor, which will stipulate the transport contract in the name of the Customer and on the account of this latter.

Whether the carrier is chosen by the Customer or whether it is chosen by the Vendor in the name of and on the account of the Customer, the goods will be transported entirely at the

risk and responsibility of the Customer, which can recourse directly to the carrier in the event of damage sustained during transport. The Customer is not entitled to make any claims against Vendor in such respects

14 PAYMENT

The terms and methods of payment for the supplies are specified in the Vendor's Offers and in the Customer's orders; when such orders are accepted by means of an order confirmation they become an integral and essential part of the supply contract.

Unless otherwise agreed, payment of the price of the supply must be made using the domicile and methods indicated by the Vendor. In the case of a delayed payment arrears interest will be applied in the measure of the Euribor 365 days rate increased by 4% per annum.

The Customer is not entitled to withhold sums from payments due to the Vendor for any whatsoever reason unless such action has been previously agreed upon and approved in writing by the Vendor.

15 EXTENDED PAYMENT – OWNERSHIP RESERVATION

If the payment is extended, the sale shall be understood to have taken place with reserved ownership pursuant to the terms of articles 1523 et seq. of the Italian civil code without any further provisions having to be taken successively. The costs involved in establishing proof of reserved ownership as specified in art. 1524 of the Italian civil code shall be borne entirely by the Customer.

16 FORM OF THE PROPOSAL, THE ACCEPTANCE AND ANY WHATSOEVER OTHER LEGALLY SUBSTANTIAL COMMUNICATION

The proposal, acceptance, any possible claims, and any other legally substantial communications must be written and signed in a legible manner. Such communications can be transmitted by any means, including fax and e-mail. In this latter eventuality the e-mail message must bear the author's name at the foot of the page.

17 CIVIL LIABILITY INSURANCE

The Vendor undertakes to take out and maintain a "Civil Product Liability Insurance" policy. On the request of the Customer, the Vendor will produce the documents relative to such an insurance policy.

Any accidents resulting in damage to third parties in which the Vendor's products are involved and which could give rise to product civil liability claims for compensation, must be communicated with the maximum promptness to the Vendor so that this latter can participate in the relative inquiry, also through its appointed technical expert, starting from the stage of the initial investigations.

18 CONFIDENTIALITY

The Vendor and the Customer reciprocally guarantee the confidentiality of all the information, data, and all documents that they exchange during the course of their business relations.

In particular documents which are sent to the Customer like drawings, technical specifications, test reports, etc. and containing manufacturing or functional data of the products, have to be considered property of the Vendor and they cannot be disclosed or passed to third parties without the written consent of Vendor’s Management.

19 ACCEPTANCE OF THE GENERAL TERMS OF SUPPLY – AMENDMENTS OR CANCELLATIONS

These General Terms of Supply can be transmitted to the Customer in the following ways:
- DIRECTLY, during the stipulation of a bilateral agreement or contract;
- INDIRECTLY, attached to the Vendor's Order confirmations.

In both cases they are considered to have been TACITLY ACCEPTED by Customers when no contrary communication is received within the term of 15 days from the date of receipt of the terms.

If the Customer intends to amend or rescind from these terms of supply it must provide the Vendor with written notice to this effect at least 3 months before the relative amendments or withdrawal are to take effect.

20 APPLICABLE LAW.

For all matters that are omitted from the present agreement the terms of supply shall be understood as being regulated by the relevant provisions of Italian Law.

If the Customer's domicile is in a foreign country, or in any cases in which the contract includes aspects of an "international nature", the present agreement and any disputes that should arise in relation to the same shall be subject to the provisions of Italian Law, with sole jurisdiction held by the Italian ordinary courts in the competent law court of Modena.

Atlantic Fluid Tech S.r.l. General Management