STANDARD MANIFOLDS

VP0000XX

WITH OVERRIDE SCREW

ATLANTIC Fluid Tech

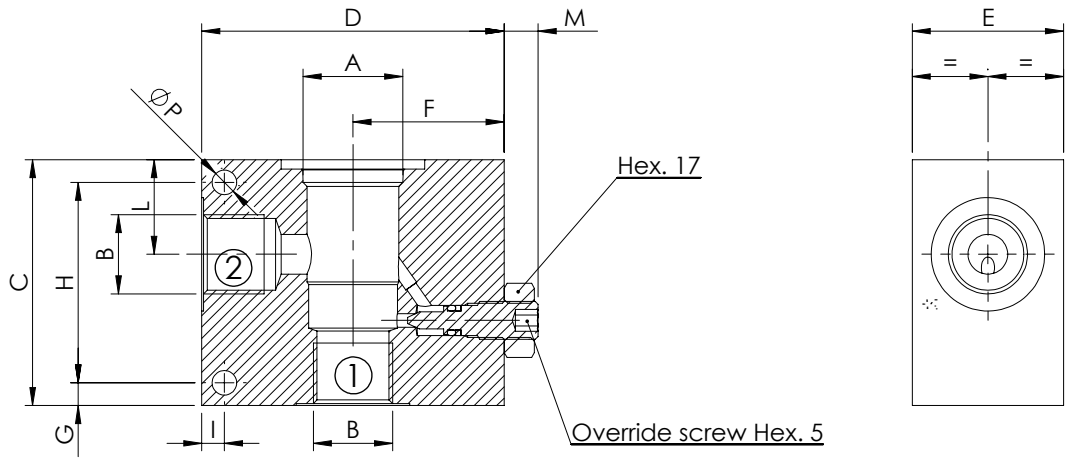

CAVITY	DIMENSIONS (mm)												QUICK CODE	
A	B	C	D	E	F	G	H	I	L	M	N	P	Steel	Aluminium
VP000057	G 1/2"	65	80	40	40	6	53	6	25	9		6,5	KS000007	KS000001
	G 3/4"	65	80	40	40	6	53	6	25	9		6,5	KS000010	KS000004
VP000013	G 3/4"	80	90	50	47	7,5	65	7,5	31	9		8,5	KS000012	KS000005
	G 1"	80	90	50	47	7,5	65	7,5	31	9		8,5	KS000011	KS000006