STANDARD MANIFOLDS

SAE-XX-2N

WITH OVERRIDE SCREW

ATLANTIC Fluid Tech

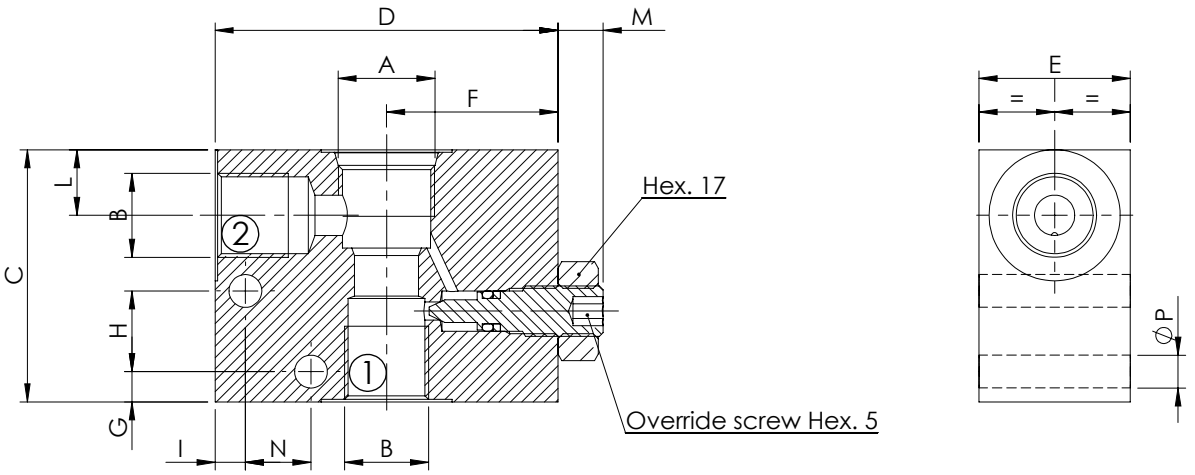

CAVITY	DIMENSIONS (mm)												QUICK CODE	
A	B	C	D	E	F	G	H	I	L	M	N	P	Steel	Aluminium
SAE-08-2N	G 1/4"	50	68	30	34	6	16	6	13	9	13	6,5	KS000009	KS000003
	G 3/8"	50	68	30	34	6	16	6	13	9	13	6,5	KS000008	KS000002