STANDARD MANIFOLDS

SAE-XX-2N

ATLANTIC Fluid Tech

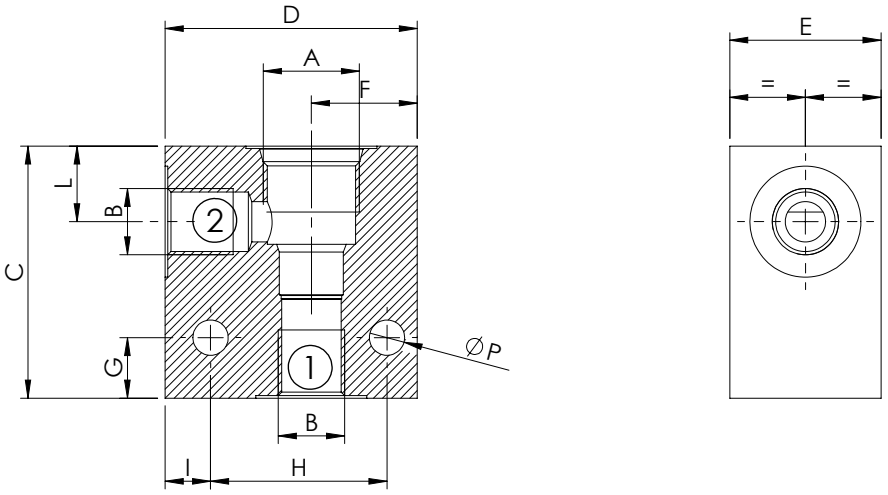

CAVITY	DIMENSIONS (mm)												QUICK CODE	
A	B	C	D	E	F	G	H	I	L	M	N	P	Steel	Aluminium
SAE-08-2N	G 1/4"	50	50	30	21	12	35	9	15			7	LK000018	LK000017
	G 3/8"	50	50	30	21	12	35	9	15			7	LK000020	LK000019
	G 1/2"	50	50	35	23	12	35	9	16			7	LK000390	LK000247
	7/16-20	50	50	30	21	12	35	9	15			7		
	9/16-18	50	50	30	21	12	35	9	15			7		
SAE-10-2N	G 3/8"	60	60	35	25	15	45	7	19			7	LK000022	LK000021
	G 1/2"	60	60	35	25	15	45	7	19			7	LK000024	LK000023
	G 3/4"	60	60	40	27,5	15	45	9	20			7	LK000047	LK000046
SAE-12-2N	G 1/2"	75	80	40	35	20	60	10	26,5			9	LK000207	LK000208
	G 3/4"	75	80	40	35	20	60	10	26,5			9	LK000205	LK000206
SAE-16-2N	G 3/4"	80	90	50	37	22	60	20	26			9	LK000156	LK000157
	G 1"	80	90	50	37	22	60	20	26			9	LK000154	LK000155
SAE-20-2N														