STANDARD PLUG

VP000057/VP000013

ATLANTIC Fluid Tech

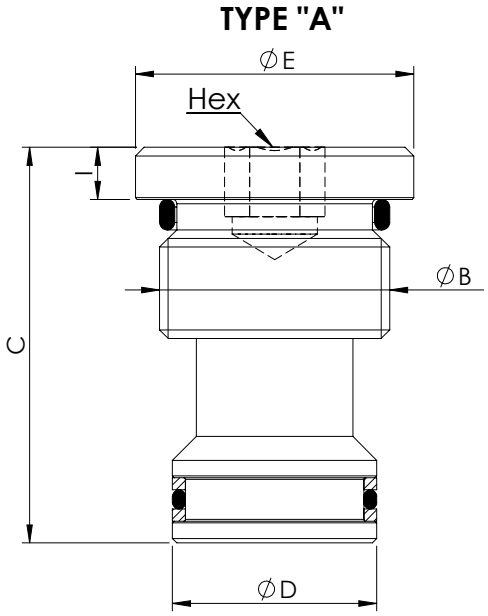

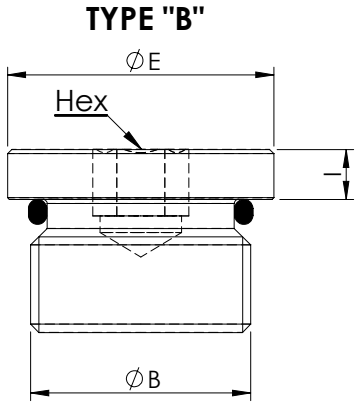

CAVITY	DIMENSION (mm)								CODE	TORQUE	CODE	TORQUE
A	B	C	D	E	F	G	Hex	I	Type " A "	(Nm)	Type " B "	(Nm)
VP000057	G 3/4"	45,5	23,5	32			10	6	ST000259	110-130	ST000278	110-130
VP000013	G 1"	55	30	38			13	6	ST000337	135-150	ST000338	135-150