SLEEVE BODY

SLEEVE

ATLANTIC Fluid Tech

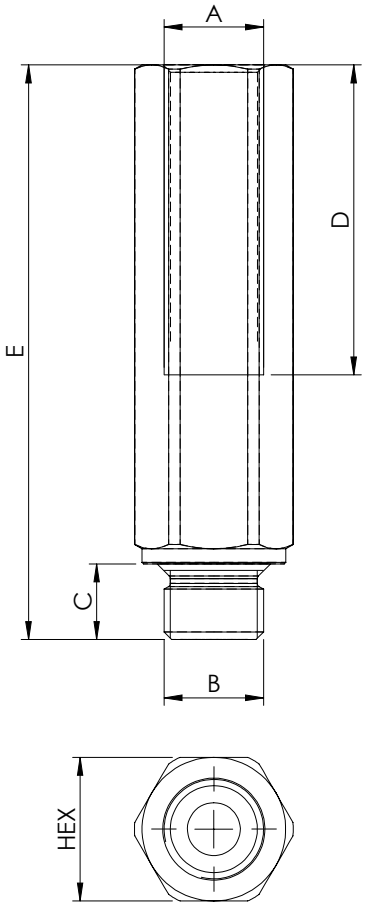

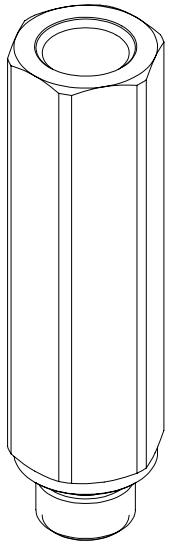

SPECIFICATIONS

Max. operating pressure:	350 bar
Material:	Zinc plated steel

NOTES

Suitable for:

-Flow control valves
CFST-XXX-MDST

ORDERING CODES

Quick code	A	B	C	D	E	HEX	Weight (Kg)
PC000196	G 1/4"	G 1/4"	10	41	76	19	0,080
PC000197	G 3/8"	G 3/8"	12	41	82	22	0,110
PC000162	G 1/2"	G 1/2"	14	45	100	27	0,165
PC000198	G 3/4"	G 3/4"	16	55	112	32	0,250