SLEEVE BODY

SLEEVE

ATLANTIC Fluid Tech

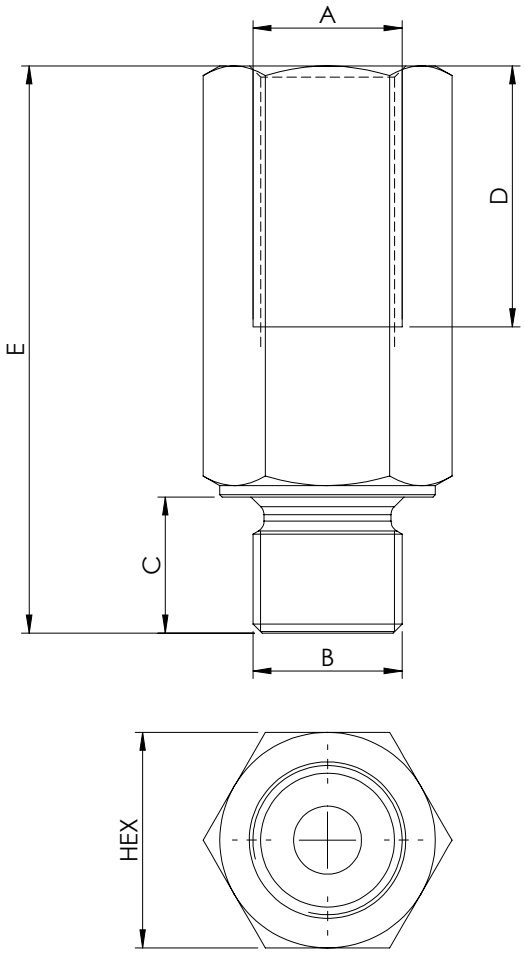

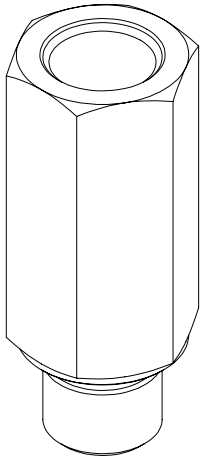

SPECIFICATIONS

Max. operating pressure:	350 bar
Material:	Zinc plated steel

NOTES

Suitable for:

-Hose burst valve
CFHN-XXX-MHST

ORDERING CODES

Quick code	A	B	C	D	E	HEX	Weight (Kg)
PC000127	G 1/4"	G 1/4"	12	23	50	19	0,07
PC000128	G 3/8"	G 3/8"	12	27	55	22	0,09
PC000129	G 1/2"	G 1/2"	14	33	63	27	0,15
PC000130	G 3/4"	G 3/4"	16	36	75	32	0,23