STANDARD MANIFOLDS

SAE-XX-2N

WITH OVERRIDE SCREW

ATLANTIC Fluid Tech

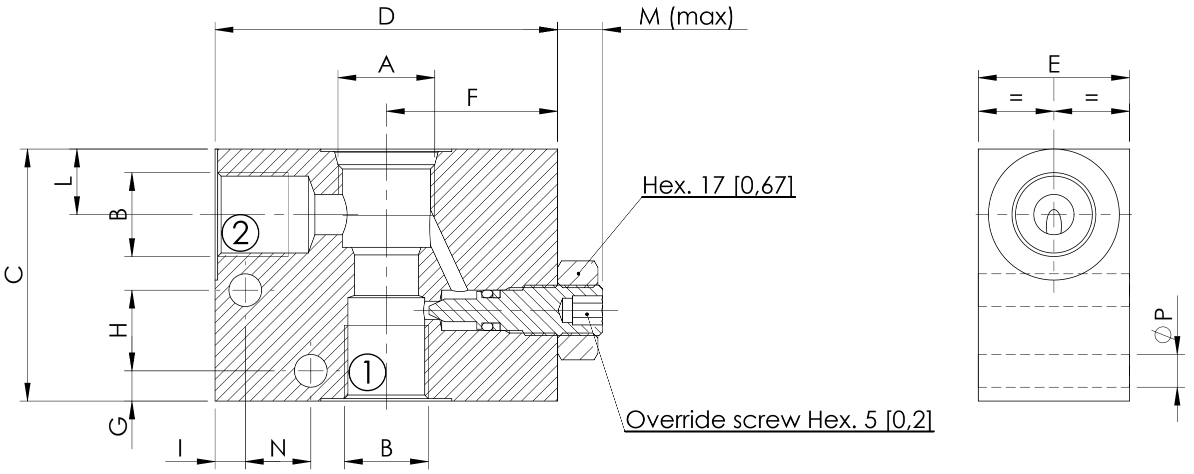

For other configurations/quick codes not available in this catalogue page please consult factory

CAVITY	DIMENSIONS: mm (inches)												QUICK CODE	
A	B	C	D	E	F	G	H	I	L	M	N	P	Steel	Aluminium
SAE-08-2N	G 1/4"	50 (1,96)	68 (2,68)	30 (1,18)	34 (1,34)	6 (0,24)	16 (0,63)	6 (0,24)	13 (0,51)	9 (0,35)	13 (0,51)	6,5 (0,26)	KS000009	KS000003
	G 3/8"	50 (1,96)	68 (2,68)	30 (1,18)	34 (1,34)	6 (0,24)	16 (0,63)	6 (0,24)	13 (0,51)	9 (0,35)	13 (0,51)	6,5 (0,26)	KS000008	KS000002