EBN series

MONOBLOCK DIRECTIONAL VALVE ON-OFF OR PROPORTIONAL

ATLANTIC Fluid Tech

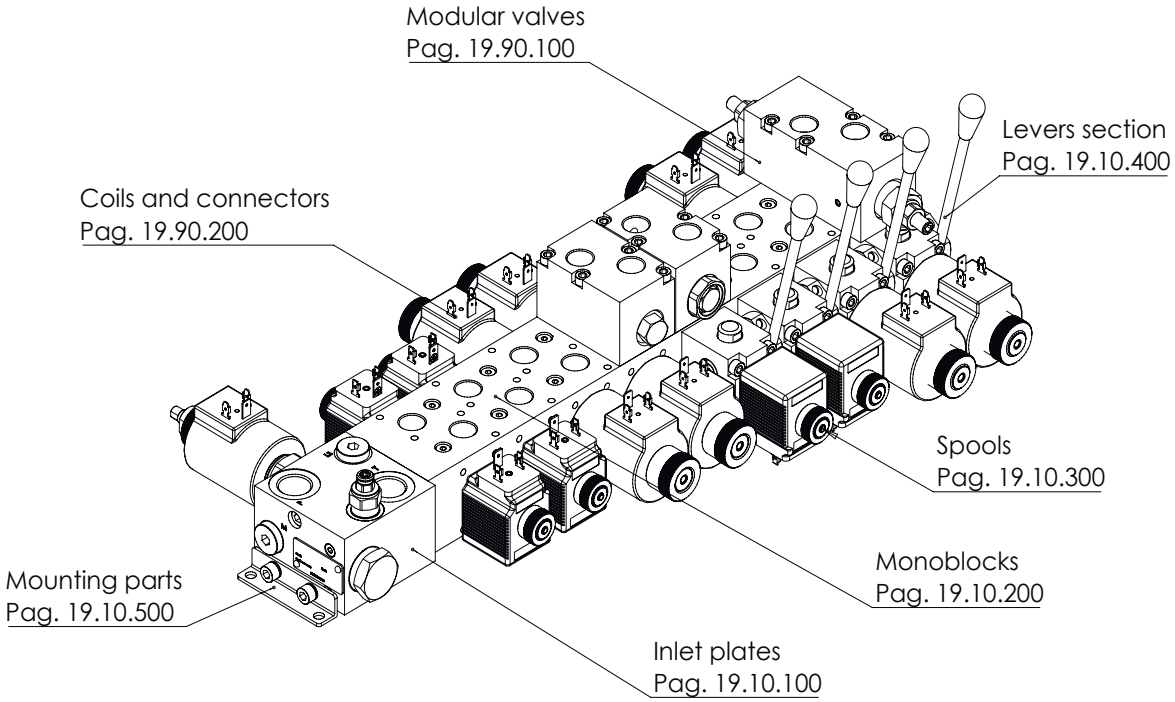

FEATURES

- Compact dimensions
- Low weight
- Custom spools
- Custom inlet blocks
- Sandwich valves for extra functions
- Cast iron monoblock and aluminum inlet block for standard applications
- High resistance cast iron monoblock and steel inlet block for high pressure systems
- Optional levers for manual operation
- No leak risk between sections
- Spools not under rod tension
- Zinc plated/anodized components for corrosion resistance

SPECIFICATION\DESCRIPTION

MAXIMUM OPERATING PRESSURE	Steel inlet block: 320 bar (4600 PSI) Aluminium inlet block: 210 bar (3000 PSI)
MAXIMUM TANK PRESSURE	20 bar (290 PSI)
RATED FLOW	030 series: 30 l/min (8 GPM) 060 series: 60l/min (16 GPM)
COIL POWER	030 series: 26 W 060 series: 33 W
VOLTAGE	12 VDC, 24 VDC, others on request
COIL CONNECTOR	DIN43650, AMP Junior, Deutsch DT04-2P
PORTS	Inlet: G1/2", 1/2 JiS, 7/8-14 UNF-2B (SAE#10) Outlet: G3/8",3/8 JIS, 3/4-16 UNF-2B (SAE#8)
OPERATING TEMPERATURE	NBR (ISO 1629) seals:-30,+100°C (-22,+212°F) FKM (ISO 1629) seals:-20,+200°C (-4,+392°F)
FILTRATION	ISO 4406:1999: class 19/17/14 NAS 1638: class 8
MOUNTING POSITION	No restrictions
MATERIAL	Spool body: cast iron Spool: hardened and grounded steel Inlet block: Aluminium or steel
SURFACE TREATMENT	Steel: zinc plating Aluminium: anodization

EBN series is a new directional valve that has innovative features in terms of performance, dimension, manufacturing reliability and customization. The valve consists in an inlet block flanged to a monoblock with spools. This construction gives the advantages of high flexibility in inlet block schemes, combined with the reliability and simplicity of monoblock spool valve construction, eliminating the risk of spools blocking due to overtightening of tie rods or the risk of leakage between sections. The spool monoblock is a 2 or 3 position, 4 ways, direct acting solenoid operated type. All sections have threaded ports at the top and removable plugs for tank connections to allow the installation of flanged blocks with additional functions like crossover reliefs, reliefs to tank, relief and anticavitations, counterbalance valves, P.O. checks, flow restrictors and flow regulators. All sections are equipped with standard push button override and they can be equipped with lever for manual use.

HOW ORDER IT

To order an assembled block, contact AFT sales network specifying the part numbers following page 19.90.900 path.

For special versions please contact AFT sales network.

To order the separate parts please refer to each catalogue page.

SFNL-060-ZNNN-01

P, T PORTS
M PORTS

ATLANTIC Fluid Tech

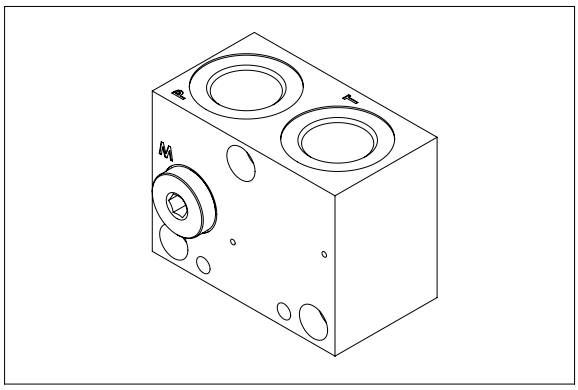

This inlet section is equipped with two thread ports (P, T) available in two different types G 1/2" or 3/4"-16 UNF plus a third threaded port M for pressure measuring available in G 1/4" or 7/16"-20.
The manifold material is aluminium for applications up to 210 bar (3000 psi) or zinc plated steel for applications up to 320 bar (4600 psi).

TECHNICAL DATA

Max pressure	210/320 bar (3000/4600 psi)
Rated flow	60 l/min (16 gpm)
Hydraulic fluid	Mineral oil DIN 51524
Fluid viscosity	10-500 mm²/s (0,02-0,78 in²/s)
Fluid temperature	-25°C/75°C (-13°F/167°F)
Enviroment temperature	-25°C/60°C (-13°F/140°F)
Weight	0,3 kg (0,66 lb)

HYDRAULIC SCHEME

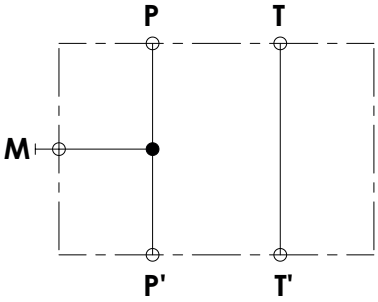

PRESSURE DROP

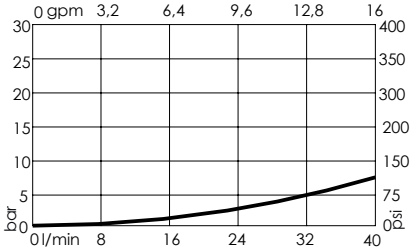

ORDERING DETAILS: SEPARATE ELEMENTS

SFNL-060-[*]NNN-01-[***]-N

*	MATERIAL TYPE
A	Steel zinc-plated (320 bar/4600 psi)
Z	Aluminium anodized (210 bar/3000 psi)

***	PORTS		
	P line	**T** line	**M**
G12	G 1/2"	G 1/2"	G 1/4"
U34	3/4"-16 UNF	3/4"-16 UNF	7/16"-20 UNF

QUICK CODE	
DESCRIPTION	CODE
SFNL-060-ZNNN-01-G12-N	SF000004

OVERALL DIMENSIONS

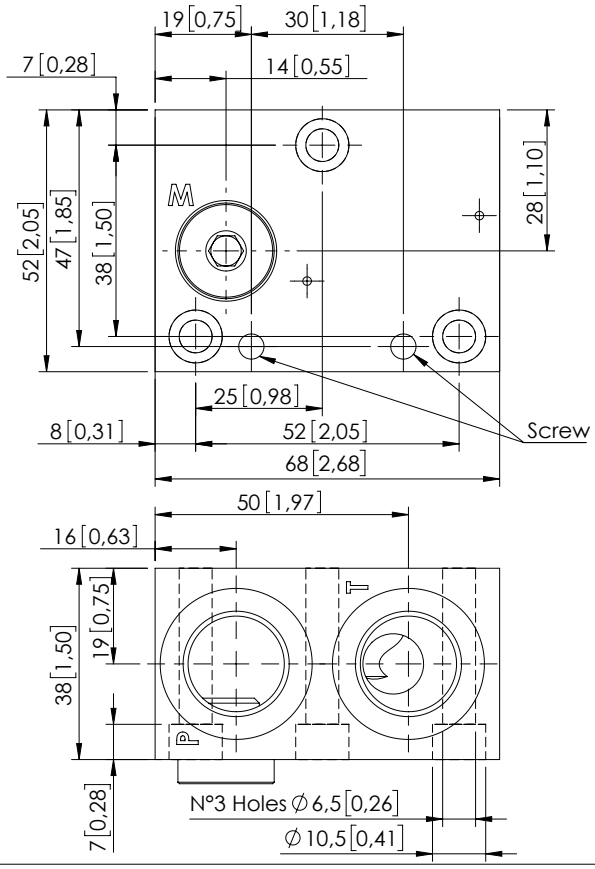

Dimensions: mm [inches]

SFNL-060-ZNNN-02

CHECK VALVE OPTIONS

ATLANTIC Fluid Tech

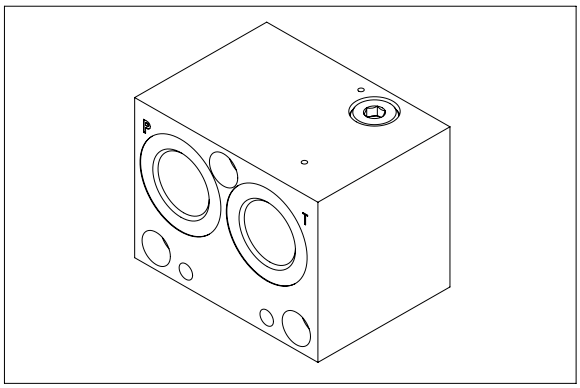

This inlet section is equipped with threaded ports (P, T) available in two different sizes G 1/2" or 3/4"-16 UNF, M ports is not available in this inlet section. The ports have extra threads to allow the installation of check valve on P and T ports.
The manifold material is aluminium for applications up to 210 bar (3000 psi)or zinc plated steel for applications up to 320 bar (4600 psi).

TECHNICAL DATA

Max pressure	210/320 bar (3000/4600 psi)
Rated flow	60 l/min (16 gpm)
Hydraulic fluid	Mineral oil DIN 51524
Fluid viscosity	10-500 mm²/s (0,02-0,78 in²/s)
Fluid temperature	-25°C/75°C (-13°F/167°F)
Enviroment temperature	-25°C/60°C (-13°F/140°F)
Weight	0,4 kg (0,88 lb)

HYDRAULIC SCHEME

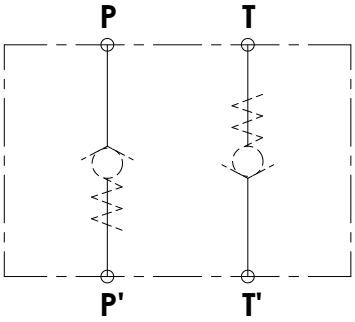

PRESSURE DROP

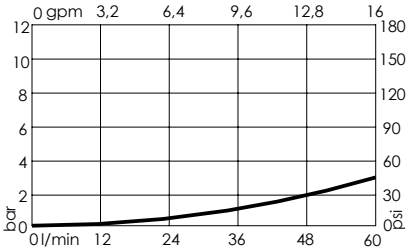

ORDERING DETAILS: SEPARATE ELEMENTS

SFNL-060-[*]NN[*]-02-[***]-N

*	MATERIAL TYPE	
A	Steel zinc-plated	(320 bar/4600 psi)
Z	Aluminium anodized	(210 bar/3000 psi)

*	CHECK VALVE OPTION
N	No check valve
D	Check valve on P e T ports
P	Check valve only P port
T	Check valve only T port

***	PORTS		
	P line	**T** line	**M**
G12	G 1/2"	G 1/2"	/
U34	3/4"-16 UNF	3/4"-16 UNF	/

QUICK CODE	
DESCRIPTION	CODE
SFNL-060-ZNNN-02-G12-N	SF000008
Check valve on P	CD000181
Check valve on T	CD000175

OVERALL DIMENSIONS

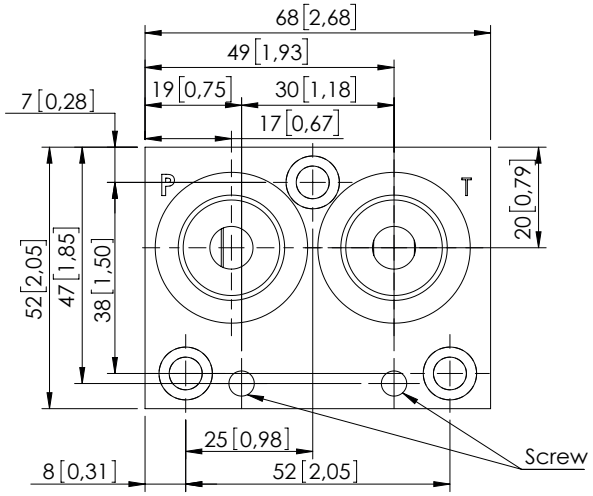

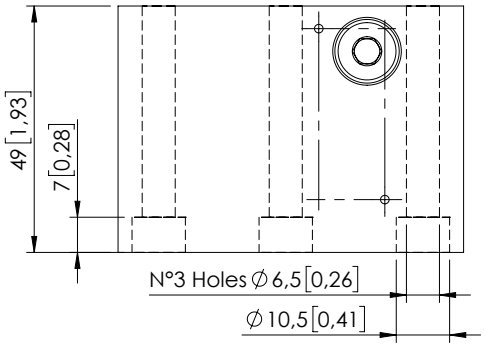

Dimensions: mm [inches]

SFNL-060-ZNNN-03

RELIEF VALVE
M PORT

ATLANTIC Fluid Tech

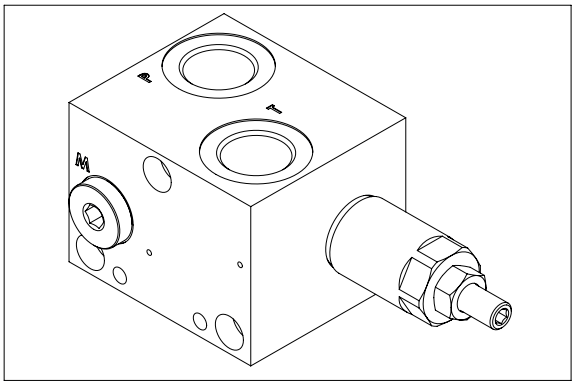

This inlet section is equipped with threaded ports (P, T) available in two different sizes G 1/2" or 3/4"-16 UNF, an M ports is available in sizes G 1/4" or 9/16-18 UNF.
It is also present a with relief valve with adjustable setting, the adjustment is made by socket screw; the max flow on the relief valve is 30 l/min.
The manifold material is aluminium for applications up to 210 bar (3000 psi)or zinc plated steel for applications up to 320 bar (4600 psi).

TECHNICAL DATA

Max pressure	210/320 bar (3000/4600 psi)
Rated flow	60 l/min (16 gpm)
Hydraulic fluid	Mineral oil DIN 51524
Fluid viscosity	10-500 mm²/s (0,02-0,78 in²/s)
Fluid temperature	-25°C/75°C (-13°F/167°F)
Enviroment temperature	-25°C/60°C (-13°F/140°F)
Weight	0,6 kg (1,32 lb)

HYDRAULIC SCHEME

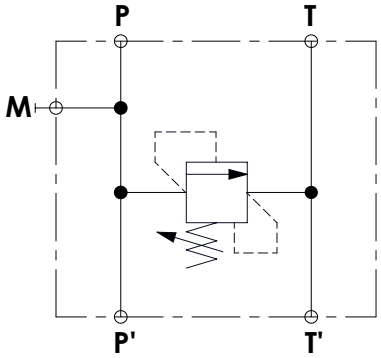

PRESSURE DROP

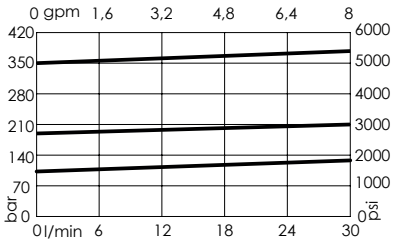

ORDERING DETAILS: SEPARATE ELEMENTS

SFNL-060-[*]N[*][*]-03-[***]-N

*	MATERIAL TYPE
A	Steel zinc-plated (320 bar/4600 psi)
Z	Aluminium anodized (210 bar/3000 psi)

*	SETTING RANGE
N	Max setting 210 bar (3000 psi)(CP000083)
A	Max setting 110 bar (1600 psi)(CP000084)
B	Max setting 350 bar (5000 psi)(CP000082)

*	ADJUSTMENT OPTION
N	Screw adjustment
V	Knob adjustment

***	PORTS		
	P line	**T** line	**M**
G12	G 1/2"	G 1/2"	G 1/4"
U34	3/4"-16 UNF	3/4"-16 UNF	7/16"-20 UNF

QUICK CODE	
DESCRIPTION	CODE
SFNL-060-ZNNN-03-G12-N	SF000003

OVERALL DIMENSIONS

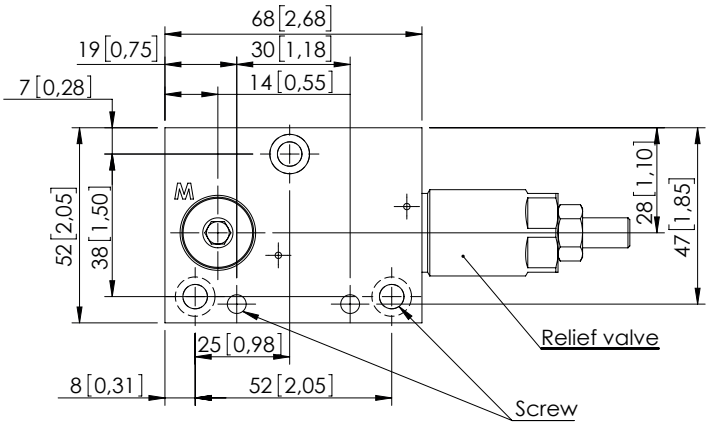

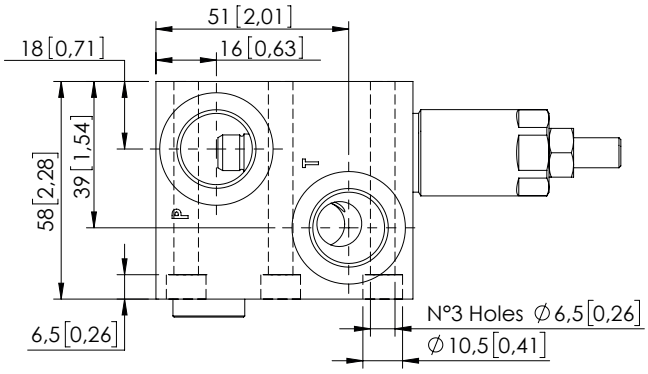

Dimensions: mm [inches]

SFNL-060-ZNNN-05

RELIEF VALVE
UNLODING VALVE

ATLANTIC Fluid Tech

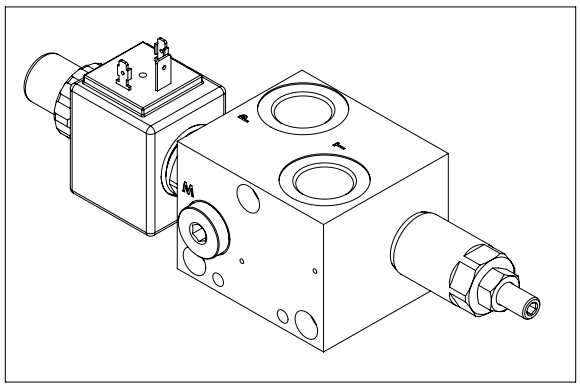

This inlet section is equipped with threaded ports (P, T) available in two different sizes G 1/2" or 3/4"-16 UNF, an M ports is available in sizes G 1/4" or 9/16-18 UNF.
A with relief valve with adjustable setting protect from peak pressure; the max flow on the relief valve is 30 l/min.
A solenoid valve normally open allow to unload the system and is equipped with manual override, max flow on the solenoid valve is 40 l/min (11 gpm).The manifold material is aluminium for applications up to 210 bar (3000 psi) or zinc plated steel for applications up to 320 bar (4600 psi).

TECHNICAL DATA

Max pressure	210/320 bar (3000/4600 psi)
Rated flow	60 l/min (16 gpm)
Hydraulic fluid	Mineral oil DIN 51524
Fluid viscosity	10-500 mm²/s (0,02-0,78 in²/s)
Fluid temperature	-25°C/75°C (-13°F/167°F)
Enviroment temperature	-25°C/60°C (-13°F/140°F)
Weight	0,75 kg (1,65 lb)

HYDRAULIC SCHEME

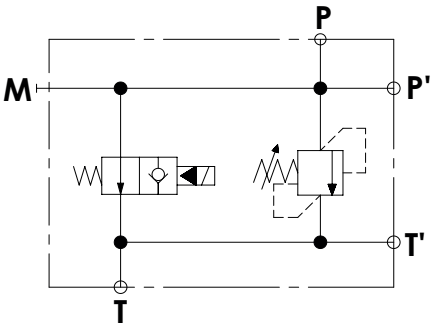

PRESSURE DROP

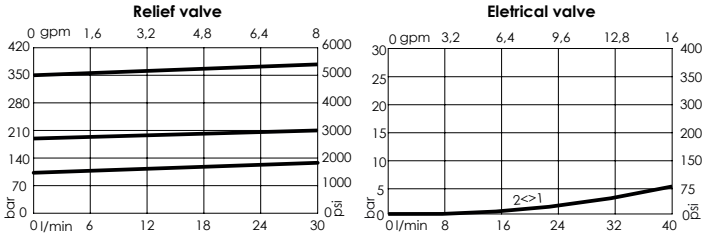

ORDERING DETAILS: SEPARATE ELEMENTS

SFNL-060-[*]N[*][*]-05-[***]-[*][**]N

*	MATERIAL TYPE
A	Steel zinc-plated (320 bar/4600 psi)
Z	Aluminium anodized (210 bar/3000 psi)

*	SETTING RANGE
N	Max setting 210 bar (3000 psi)(CP000083)
A	Max setting 110 bar (1600 psi)(CP000084)
B	Max setting 350 bar (5000 psi)(CP000082)

*	ADJUSTMENT OPTION
N	Screw adjustment
V	Knob adjustment

***	PORTS		
	P line	**T** line	**M**
G12	G 1/2"	G 1/2"	G 1/4"
U34	3/4"-16 UNF	3/4"-16 UNF	7/16"-20 UNF

*	VOLTAGE
	no coils
A	12 V dc
B	24 V dc

**	COILS TYPE
	no coils
HR	Hirschmann (ISO 4400 DIN 43650)
DT	Deutsch (DT04-2P)
AJ	Amp junior (AJ type)

QUICK CODE	
DESCRIPTION	CODE
SFNL-060-ZNNN-05-G12-N	SF000002
Unloading valve	CE000868

OVERALL DIMENSIONS

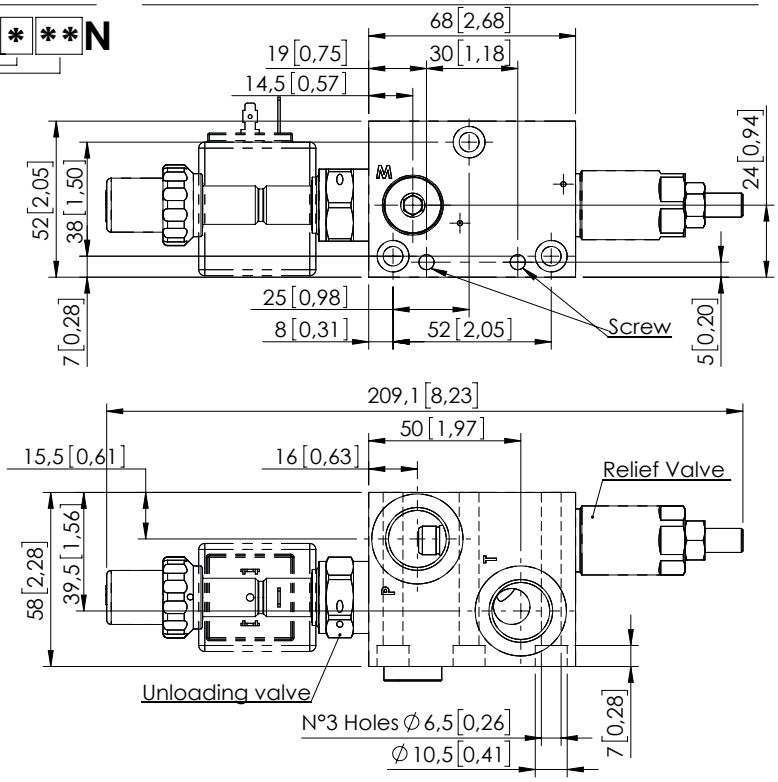

Dimensions: mm [inches]

SFNL-060-ZDNN-07

PROPORTIONAL COMPENSATED FLOW REGULATOR

ATLANTIC Fluid Tech

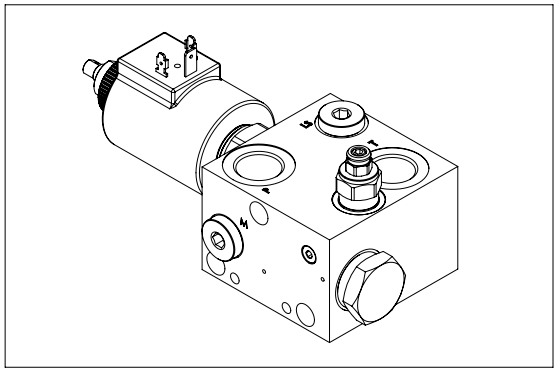

This inlet section is equipped with threaded ports (P, T) available in two different sizes G 1/2" or 3/4"-16 UNF, an M ports is available in sizes G 1/4" or 9/16-18 UNF; an LS port allows to measure of the load pressure.
A proportional flow regulator with external flow compensator controls the meetering, the maximum flow is 40 l/min (11 gpm); when not energized the compensator is unloading the flow.
A relief valve with adjustable setting protect from peak of pressure. The manifold material is aluminium for applications up to 210 bar (3000 psi) or zinc plated steel for applications up to 320 bar (4600 psi).

TECHNICAL DATA

Max pressure	210/320 bar (3000/4600 psi)
Rated flow	60 l/min (16 gpm)
Hydraulic fluid	Mineral oil DIN 51524
Fluid viscosity	10-500 mm²/s (0,02-0,78 in²/s)
Fluid temperature	-25°C/75°C (-13°F/167°F)
Enviroment temperature	-25°C/60°C (-13°F/140°F)
Weight	0,75 kg (1,65 lb)

HYDRAULIC SCHEME

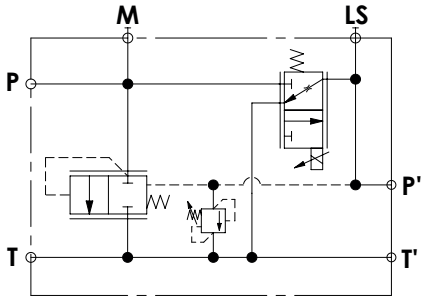

PROPORTIONAL FLOW REGULATOR CURVES

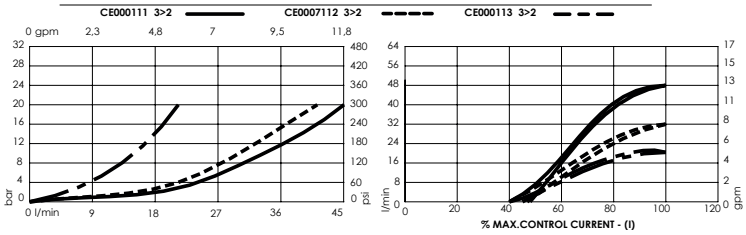

ORDERING DETAILS: SEPARATE ELEMENTS

SFNL-060-[*]D[*][*]-07-[***]-[*][**]N

*	MATERIAL TYPE	
A	Steel zinc-plated	(320 bar/4600 psi)
Z	Aluminium anodized	(210 bar/3000 psi)

*	REALIF VALVE SETTING	
N	Max setting 210 bar (3000 psi)	(CP000029)
A	Max setting 110 bar (1600 psi)	(CP000030)
B	Max setting 350 bar (5000 psi)	(CP000002)

*	ADJUSTMENT FLOW	
N	30 l/min (8 gpm)	(CE000112)
A	20 l/min (5 gpm)	(CE000113)
B	10 l/min (2,5 gpm)	(CE000111)

***	PORTS		
	P line	**T** line	**M**
G12	G 1/2"	G 1/2"	G 1/4"
U34	3/4"-16 UNF	3/4"-16 UNF	7/16"-20 UNF

*	VOLTAGE
	no coils
A	12 V dc
B	24 V dc

**	COILS TYPE
	no coils
HR	Hirschmann (ISO 4400 DIN 43650)
DT	Deutsch (DT04-2P)
AJ	Amp junior (AJ type)

QUICK CODE	
DESCRIPTION	CODE
SFNL-060-ZNNN-05-G12-N	SF000001

OVERALL DIMENSIONS

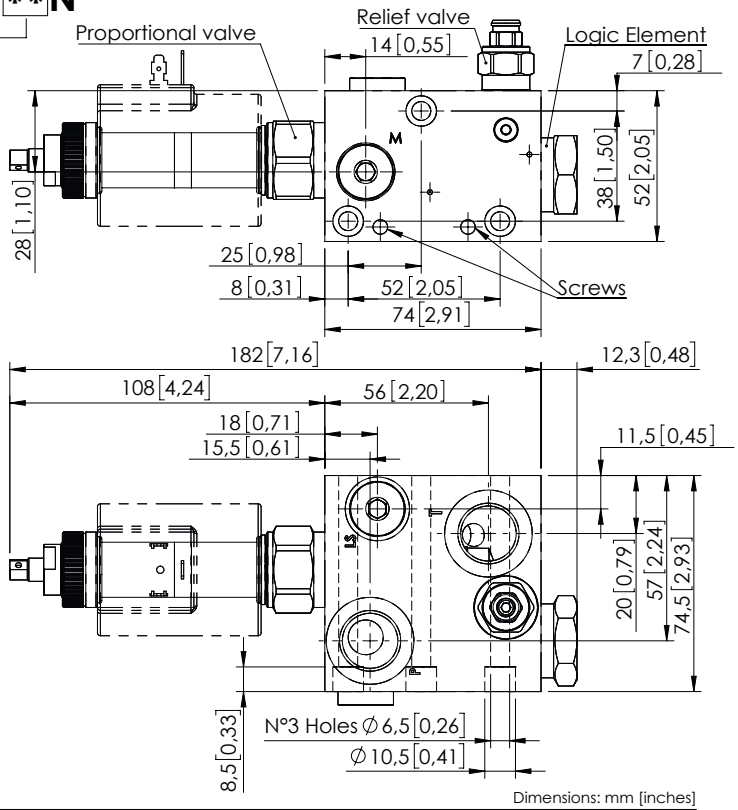

Dimensions: mm [inches]

LDNP-060-NNNN

CAST-IRON MANIFOLD

ATLANTIC Fluid Tech

In LDNS/P-030-C plug are included in the manifold

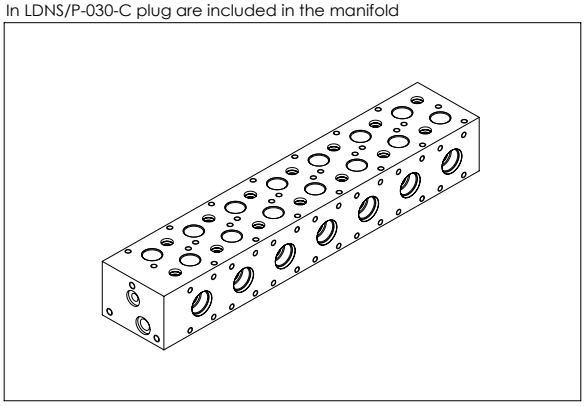

The monoblock valve can be ordered with a number of spool's section from 1 to 7, each section is equipped with side monting holes for lever option and with treaded holes at the top for flangeable modular valve. There are also two removable plugs connecting to a T line to allow to flange special blocks.
The standard version has G 3/8" ports and can be supplied with top blocks with 9/16"-18 UNF (SAE6) or M16x1,5.
The manifold it is made with cast-iron and protected from corrosion with zinc-plating surface treatment.
The inlet face has 3 threaded holes to flange an inlet block that can be customized for each application, giving high flexibility to the project.

TECHNICAL DATA

Max pressure	320 bar (4600 psi)
Rated flow	60 l/min (16 gpm)
Material	Cast-iron
Surface treatment	Zinc-plated black
Weight for single section	1,6 kg (3,5 lb)
Wight for additional sections	+ 1 kg (2,2 lb) each

ORDERING DETAILS: SEPARATE ELEMENTS

LDN * -060-NNNN- ** - *

*	TYPE OF MANIFOLD
S	Series connection
P	Parallel connection

**	NUMBER OF SECTION
01	manifold with one section
02	manifold with two sections
03	manifold with three sections
04	manifold with four sections
05	manifold with five sections
06	manifold with six sections
07	manifold with seven sections

***	PORTS		
	P line	**T** line	**M**
G38	G 3/8"	G 3/8"	G 1/4"
U09	9/16"-18 UNF	9/16"-18 UNF	7/16"-20 UNF

QUICK CODE	
DESCRIPTION	CODE
LDNP-060-NNNN-01-G38	LD000156
LDNP-060-NNNN-02-G38	LD000155
LDNP-060-NNNN-03-G38	LD000147
LDNP-060-NNNN-04-G38	LD000146
LDNP-060-NNNN-05-G38	LD000154
LDNP-060-NNNN-06-G38	LD000153
LDNP-060-NNNN-07-G38	LD000157

MANIFOLD CONFIGURATIONS

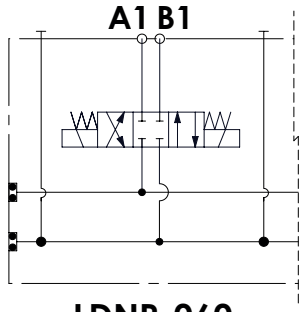

LDNP-060

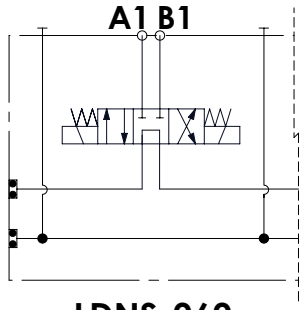

LDNS-060

MONOBLOCK PRESSURE DROP

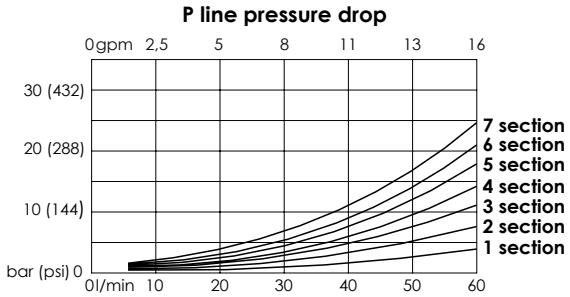

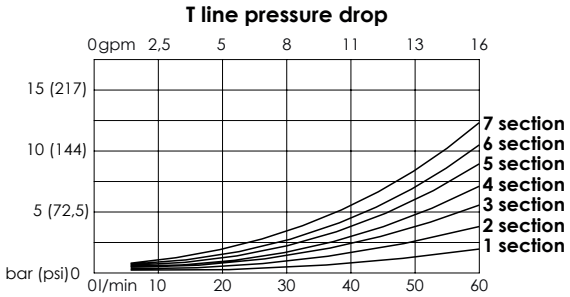

LDNS-060-NNNN

CAST-IRON MANIFOLD

ATLANTIC Fluid Tech

GAS VERSION

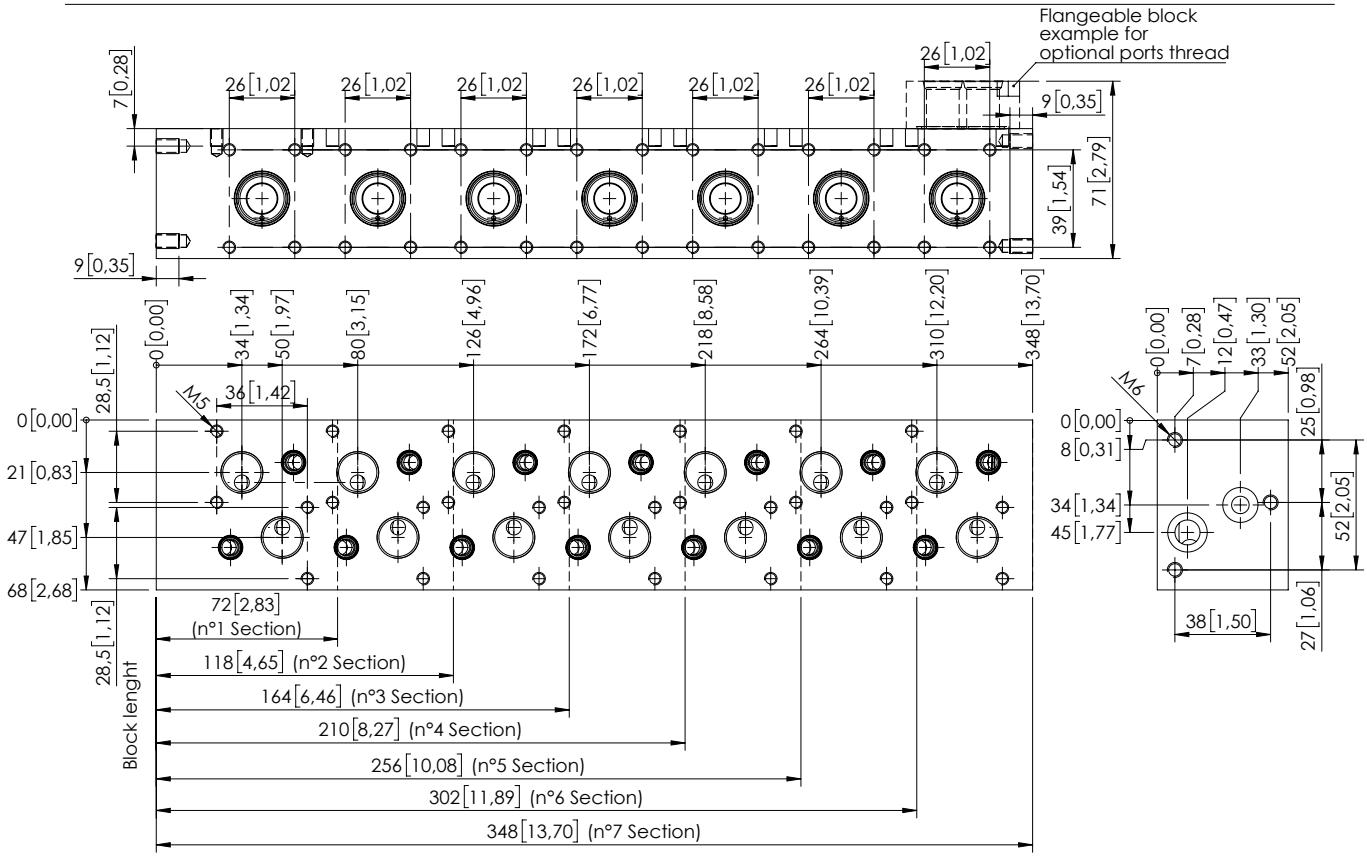

SAE VERSION

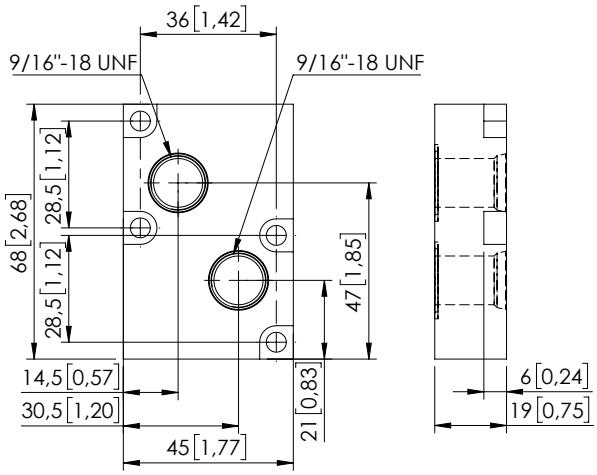

This top flangeable block transform the monoblock to a UNF version.

Quick code: MP000096

METRIC VERSION

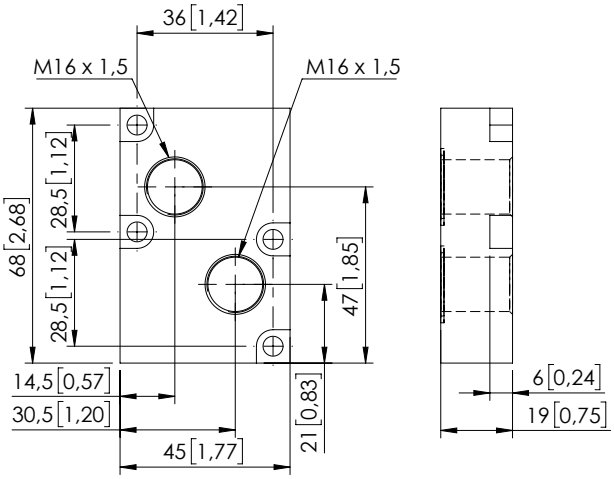

This top flangeable block transform the monoblock to a Metric version.

Quick code: MP000097

Dimensions: mm [inches]

SHNE-030-NNON

30 L/MIN (8 gpm)
SOLENOID VALVE

ATLANTIC Fluid Tech

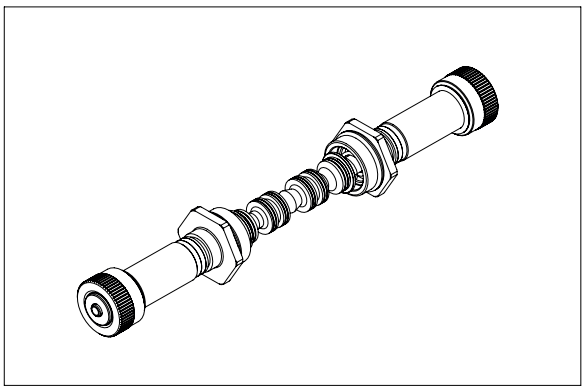

This spool group is rated for 30 lpm (8gpm) and for a maximum pressure of 320 bar (4600 psi); the spool is actuated by on off tubes and can be ordered with different hydraulic schemes. Each spools is interchangeable to give maximum flexibility and can be fit in all monoblock sections, changing spools require adequate training.
The group is made by two tubes, one spool, two springs and mounting components.

TECHNICAL DATA

Max pressure	320 bar (4600 psi)
Rated flow	30 l/min (8 gpm)
Duty cycle	100 % ED
Hydraulic fluid	Mineral oil DIN 51524
Fluid viscosity	10-500 mm²/s (0,02-0,78 in²/s)
Fluid temperature	-25°C/75°C (-13°F/167°F)
Enviroment temperature	-25°C/60°C (-13°F/140°F)
Weight with one solenoid	0,15 kg (0,33 lb)
Weight with two solenoid	0,12 kg (0,26 lb)

ORDERING DETAILS: SEPARATE ELEMENTS

SH[*][*] - 030 - NN[**] - [**] - 321 - [*] [**] N

*	OVERRIDE TYPE
N	Standard
P	Push
V	Screw

*	SECTION TYPE
E	Solenoid operated
L	Solenoid operated plus lever operated
M	Lever operated

**	ACTUATION TYPE
ON	On/Off
SS	Soft shift

**	SPOOL TYPE
...	See table n°1

*	VOLTAGE
	no coils
A	12 V dc
B	24 V dc

**	COILS TYPE
	no coils
HR	Hirschmann (ISO 4400 DIN 43650)
DT	Deutsch (DT04-2P)
AJ	Amp junior (AJ type)

QUICK CODE	
DESCRIPTION	CODE
SHNE-030-NNON-46-321	
SHNE-030-NNON-10-321	
SHNE-030-NNON-07-321	

HYDRAULIC SYMBOLS

Table n°1

SPOOL CODE		HYDRAULIC SCHEME		TRANSITORY POSITION	
46		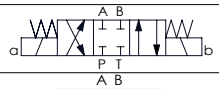			
10		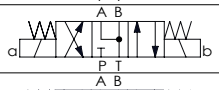			
07		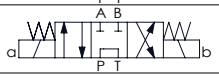			
SPOOL CODE		**HYDRAULIC SCHEME**		**TRANSITORY POSITION**	
a	**b**	**a**	**b**	**a**	**b**
23			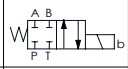		
21			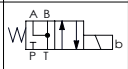		
22		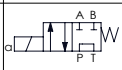	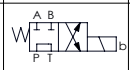		
17		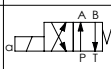	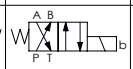		
18		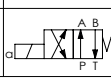	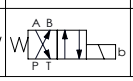		

OVERRIDE TYPE

Dimensions: mm [inches]

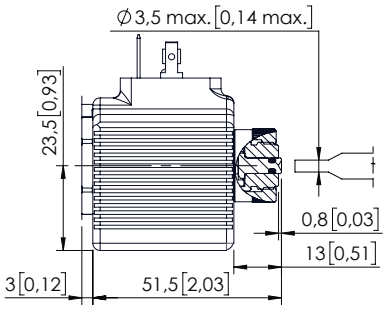

OVERRIDE TYPE "N"

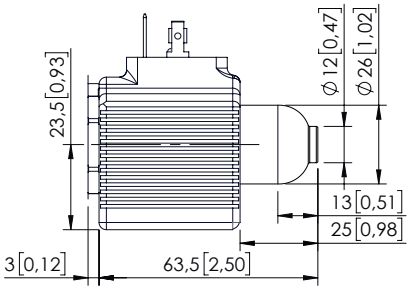

OVERRIDE TYPE "P"

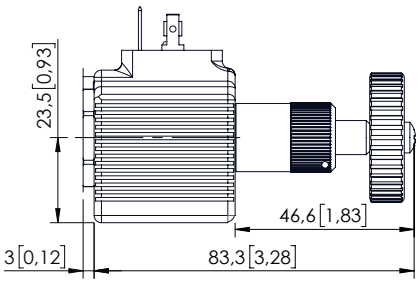

OVERRIDE TYPE "V"

SHNE-030-NNON

30 L/MIN (8 gpm)
SOLENOID VALVE

ATLANTIC Fluid Tech

PERFORMANCE LIMITS CURVES - STANDARD SECTION

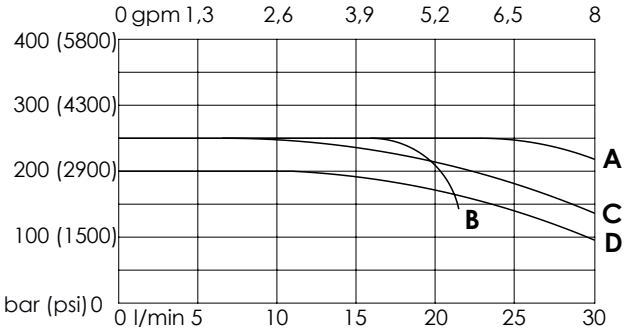

Spool type	Performance limits curve
46	A
10	A
07	B
23	A
21	A
22	A
17	C
18	D

The tests are carried out with hot solenoids , powered with 90 % of nominal voltage, with 50 °C (122°F) fluid temperature.
The fluid used is mineral oil having a viscosity of 46 mm²/s @ 40 °C (0,07 in²/s @104°F).
The value in the diagram refer to test carried aut with flow simultaneously in both directions (P > A, B > T).
In cases of schemes 4/2 or 4/3 used with the flow in one direction only the performance can change.

PRESSURE DROP CURVES - STANDARD SECTION

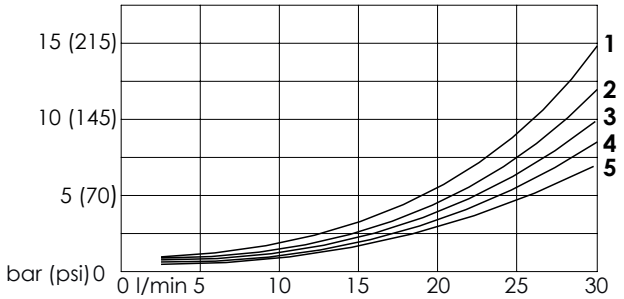

Spool type	Pressure drop curve				
	P>A	P>B	A>T	B>T	P>T
46	3	3	4	4	/
10	3	3	5	5	/
07	2	2	1	1	2
23	/	3	4	/	/
21	/	3	5	/	/
22	2	/	/	1	/
17	/	3	4	/	/
18	/	2	3	/	/

The diagram shows the performance limit curve of standard section. The fluid used is mineral oil viscosity 46 mm²/s at 40 °C (0,07 in²/s @104°F); the tests are performed at a 40 °C (104°F) temperature.

Dimensions: mm [inches]

OVERALL DIMENSION - STANDARD SECTION

In case of top modular valve MA or MC type installation the coil connection can be faced to the top or to the bottom of the block. (See modular valve section)

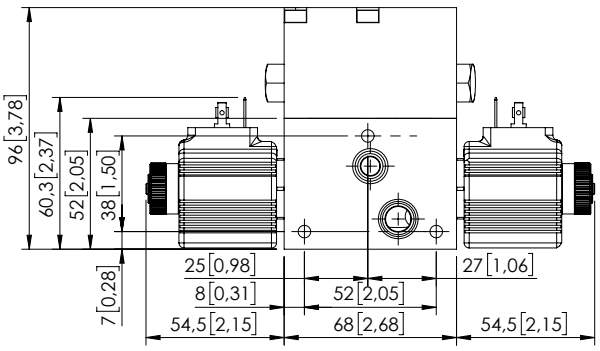

In case of top modular valve MB, KE and KF type installation the coil connection can be faced only to the bottom of the block. (See modular valve section)

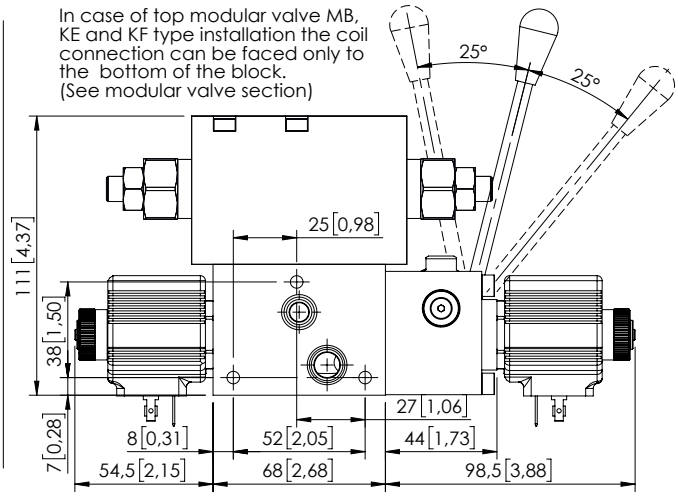

SHNE-060-NNON

60 L/MIN (16 gpm)
SOLENOID VALVE

ATLANTIC Fluid Tech

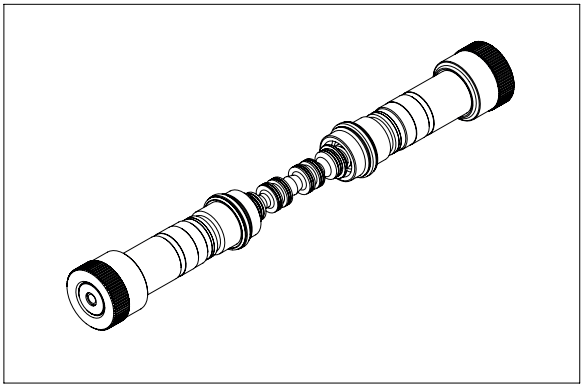

This spool group is rated for 60 lpm (16 gpm) and for a maximum pressure of 320 bar (4600 psi); the spool is actuated by on off tubes and can be ordered with different hydraulic schemes.
Each spools is interchangeable to give maximum flexibility and can be fit in all monoblock sections, changing spools require adequate training.
The group is made by two tubes, one spool, two springs and mounting components.

TECHNICAL DATA

Max pressure	320 bar (4600 psi)
Rated flow	60 l/min (16 gpm)
Duty cycle	100 % ED
Hydraulic fluid	Mineral oil DIN 51524
Fluid viscosity	10-500 mm²/s (0,02-0,78 in²/s)
Fluid temperature	-25°C/75°C (-13°F/167°F)
Enviroment temperature	-25°C/60°C (-13°F/140°F)
Weight with one solenoid	0,2 kg (0,44 lb)
Weight with two solenoid	0,4 kg (0,88 lb)

ORDERING DETAILS: SEPARATE ELEMENTS

SH * * - 060 - NN ** - ** -321- * ** N

*	OVERRIDE TYPE
N	Standard
P	Push
V	Screw

*	SECTION TYPE
E	Solenoid operated
L	Solenoid operated plus lever operated
M	Lever operated

**	ACTUATION TYPE
ON	On/Off
SS	Soft shift

**	SPOOL TYPE
...	See table n°1

*	VOLTAGE
	no coils
A	12 V dc
B	24 V dc

**	COILS TYPE
	no coils
HR	Hirschmann (ISO 4400 DIN 43650)
DT	Deutsch (DT04-2P)
AJ	Amp junior (AJ type)

QUICK CODE	
DESCRIPTION	CODE
SHNE-060-NNON-46-321	
SHNE-060-NNON-10-321	
SHNE-060-NNON-07-321	

HYDRAULIC SYMBOLS

Table n°1

SPOOL CODE	HYDRAULIC SCHEME	TRANSITORY POSITION
46	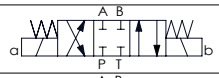	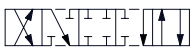
10	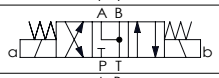	
07	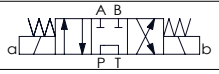	

SPOOL CODE		HYDRAULIC SCHEME		TRANSITORY POSITION	
a	**b**	**a**	**b**	**a**	**b**
23				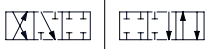	
21		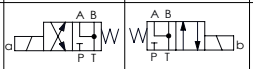		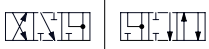	
22				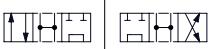	
17		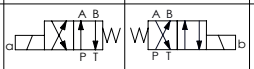			
18		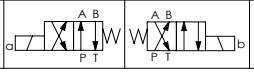		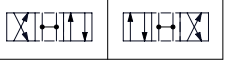	

OVERRIDE TYPE

Dimensions: mm [inches]

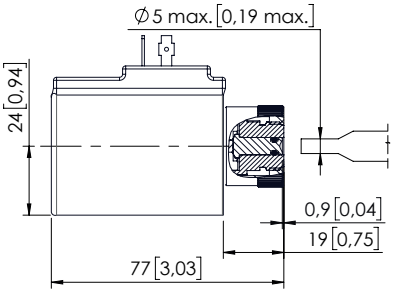

OVERRIDE TYPE "N"

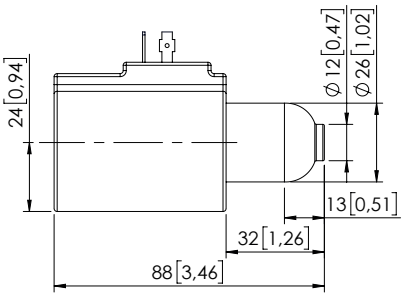

OVERRIDE TYPE "P"

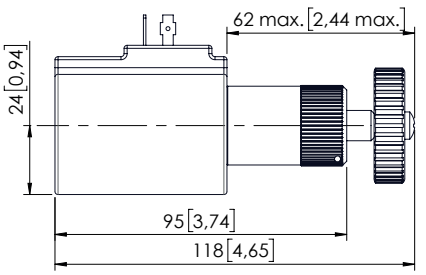

OVERRIDE TYPE "V"

SHNE-060-NNON

60 L/MIN (16 gpm)
SOLENOID VALVE

ATLANTIC Fluid Tech

PERFORMANCE LIMIT CURVES - STANDARD SECTION

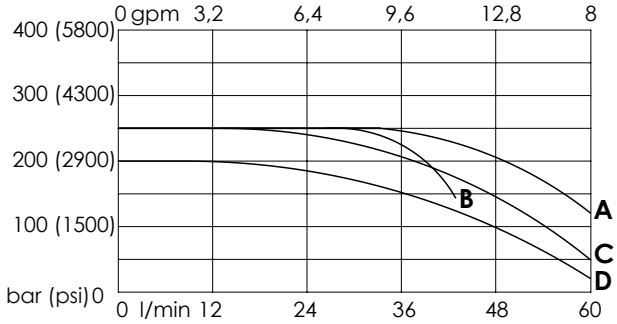

Spool type	Performance limits curve
46	A
10	A
07	B
23	A
21	A
22	A
17	C
18	D

The tests are carried out with hot solenoids , powered with 90 % of nominal voltage, with 50 °C (122°F) fluid temperature.
The fluid used is mineral oil having a viscosity of 46 mm²/s @ 40 °C (0,07 in²/s @104°F).
The value in the diagram refer to test carried aut with flow simultaneously in both directions (P > A, B > T).
In cases of schemes 4/2 or 4/3 used with the flow in one direction only the performance can change.

PRESSURE DROP CURVES - STANDARD SECTION

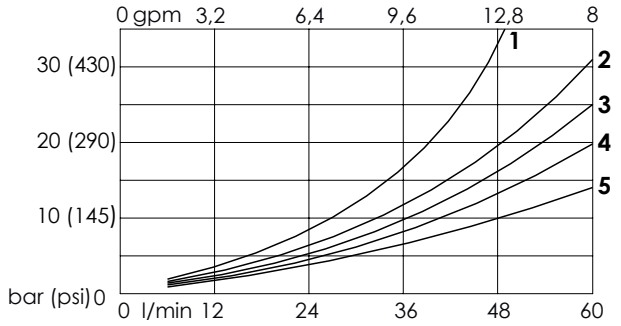

Spool type	Pressure drop curve				
	P>A	P>B	A>T	B>T	P>T
46	3	3	4	4	/
10	3	3	5	5	/
07	2	2	1	1	2
23	/	3	4	/	/
21	/	3	5	/	/
22	2	/	/	1	/
17	/	3	4	/	/
18	/	2	3	/	/

The diagram shows the performance limit curve of standard section. The fluid used is mineral oil viscosity 46 mm²/s at 40 °C (0,07 in²/s @104°F);the tests are performed at a 40 °C (104°F) temperature.

Dimensions: mm [inches]

OVERALL DIMENSION - STANDARD SECTION

In case of top modular valve MA or MC type installation the coil connection can be faced to the top or to the bottom of the block. (See modular valve section)

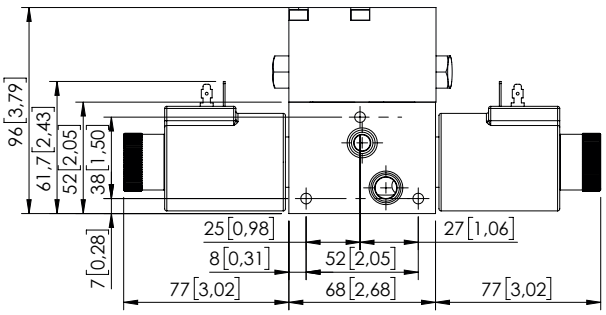

In case of top modular valve MB, KE and KF type installation the coil connection can be faced only to the bottom of the block. (See modular valve section)

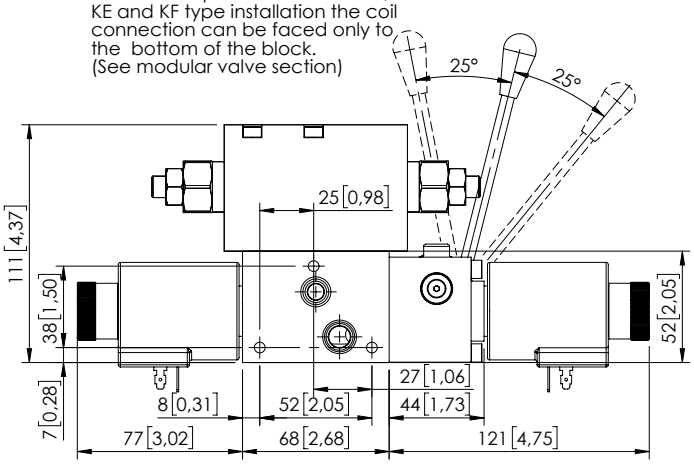

SHNE-050-NNPR

50 L/MIN (13 gpm)
PROPORTIONAL
SOLENOID VALVE

ATLANTIC Fluid Tech

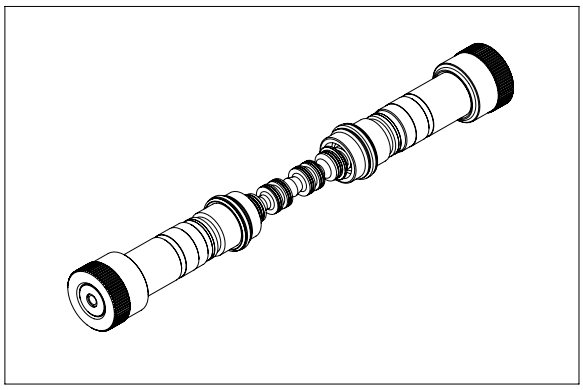

This spool group is rated for 50 lpm (13 gpm) and for a maximum pressure of 320 bar (4600 psi); the spool is actuated by proportional tubes and can be ordered with different hydraulic schemes.
Each spools is interchangeable to give maximum flexibility and can be fit in all monoblock sections, changing spools require adequate training.
The group is made by two tubes, one spool, two springs and mounting components.

TECHNICAL DATA

Max pressure	320 bar (4600 psi)
Rated flow	50 l/min (13 gpm)
Duty cycle	100 % ED
Max current	1.76A(12 V dc) 0.88A (24 V dc)
Hydraulic fluid	Mineral oil DIN 51524
Fluid viscosity	10-500 mm²/s (0,02-0,78 in²/s)
Fluid temperature	-25°C/75°C (-13°F/167°F)
Enviroment temperature	-25°C/60°C (-13°F/140°F)
Weight with one solenoid	0,2 kg (0,44 lb)
Weight with two solenoid	0,4 kg (0,88 lb)

ORDERING DETAILS: SEPARATE ELEMENTS

SH[*][*]-0[**]-NNPR-[**]-321-[*][**]N

*	OVERRIDE TYPE
N	Standard
P	Push
V	Screw

*	SECTION TYPE
E	Solenoid operated
L	Solenoid operated plus lever operated
M	Lever operated

*	SPOOL FLOW
20	20 l/min at 12 bar - 10 l/min at 6 bar (5 gpm at 174 psi - 2,5 gpm at 87 psi)
35	35 l/min at 12 bar - 20 l/min at 6 bar (9 gpm at 174 psi - 5 gpm at 87 psi)
50	50 l/min at 12 bar - 30 l/min at 6 bar (13 gpm at 174 psi - 8 gpm at 87 psi)

**	
...	See table n°1

*	VOLTAGE
	no coils
A	12 V dc
B	24 V dc

**	COILS TYPE
	no coils
HR	Hirschmann (ISO 4400 DIN 43650)
DT	Deutsch (DT04-2P)
AJ	Amp junior (AJ type)

QUICK CODE	
DESCRIPTION	CODE
SHNE-030-NNPR-59-321	
SHNE-030-NNPR-55-321	

HYDRAULIC SYMBOLS

Table n°1

SPOOL CODE	HYDRAULIC SCHEME	TRANSITORY POSITION
59	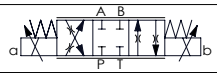	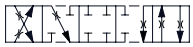
55	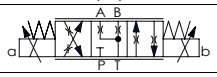	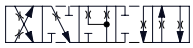

SPOOL CODE		HYDRAULIC SCHEME		TRANSITORY POSITION	
a	**b**	**a**	**b**	**a**	**b**

For single solenoid operation please contact AFT sales network.

OVERRIDE TYPE

Dimensions: mm [inches]

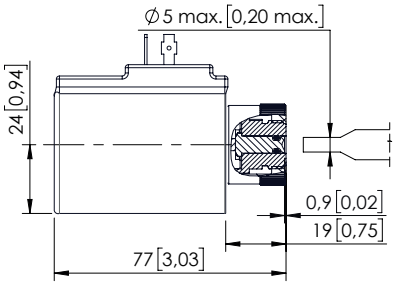

OVERRIDE TYPE "N"

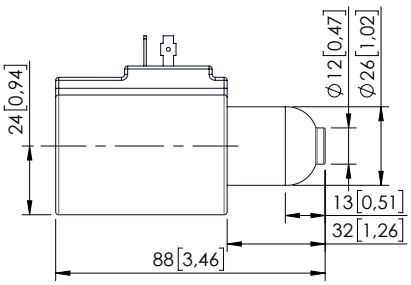

OVERRIDE TYPE "P"

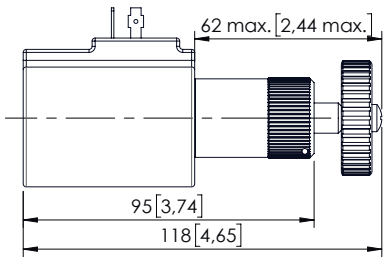

OVERRIDE TYPE "V"

SHNE-050-NNPR

50 L/MIN (13 gpm)
PROPORTIONAL
SOLENOID VALVE

ATLANTIC Fluid Tech

FLOW DIAGRAM - 050

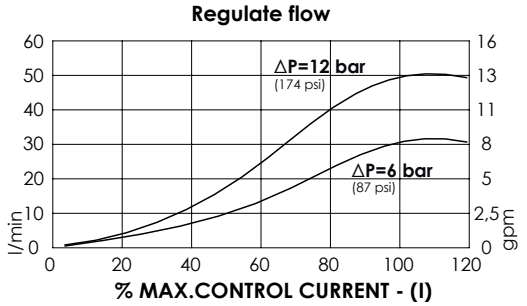

REGULATION DIAGRAM - 050

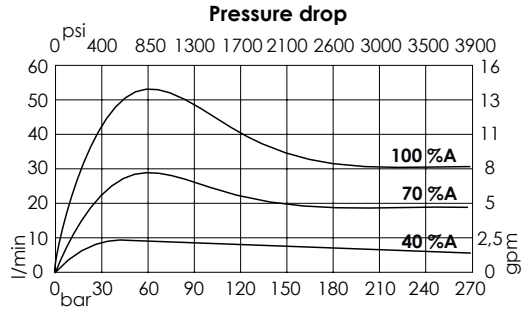

FLOW DIAGRAM - 035

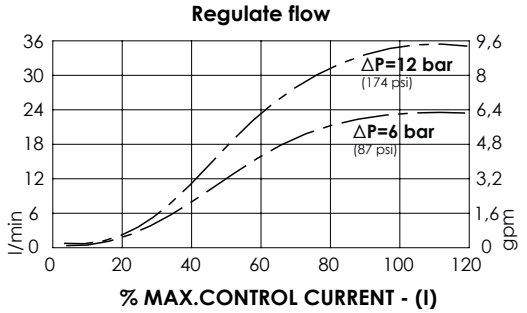

REGULATION DIAGRAM - 035

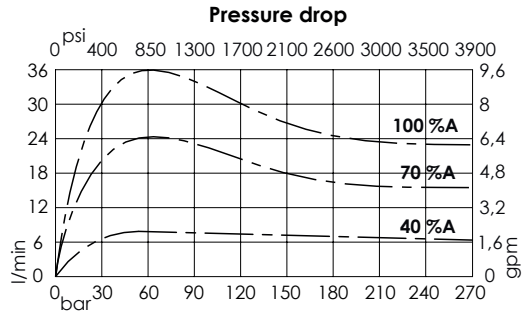

FLOW DIAGRAM - 020

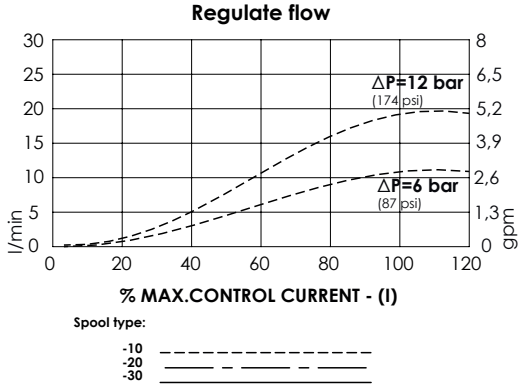

REGULATION DIAGRAM - 020

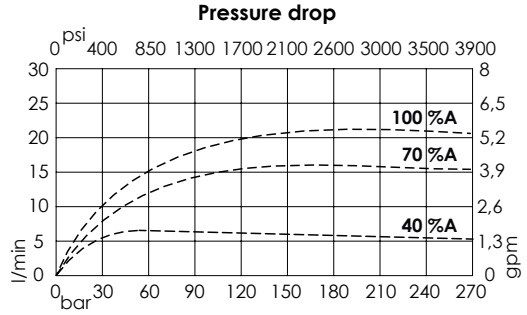

The diagram shows the performance limit curve of a standard section. The fluid used is mineral oil with viscosity of 46 mm²/s @ 40 °C (0,07 in²/s @104°F); the tests are performed at a 40 °C (104°F) temperature.

OVERALL DIMENSION - STANDARD SECTION

In case of top modular valve MA or MC type installation the coil connection can be faced to the top or to the bottom of the block. (See modular valve section)

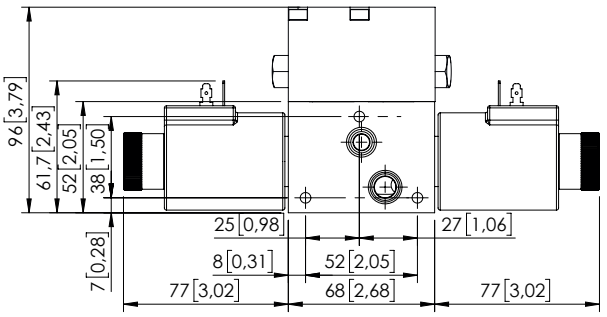

In case of top modular valve MB, KE and KF type installation the coil connection can be faced only to the bottom of the block. (See modular valve section)

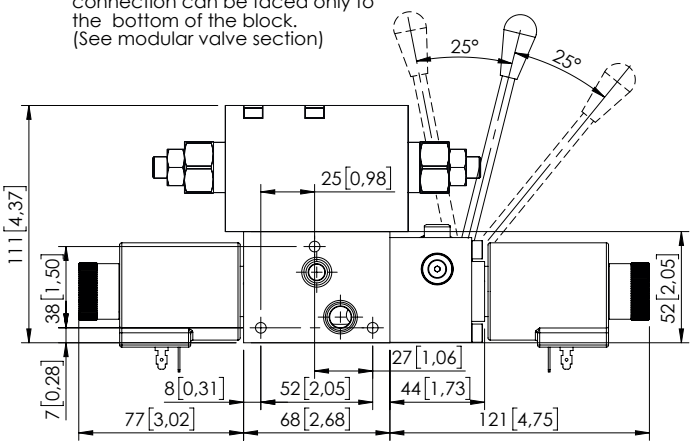

SHNE-030-POPR

30 L/MIN (8 gpm)
PROPORTIONAL
FLOW UNLOADING

ATLANTIC Fluid Tech

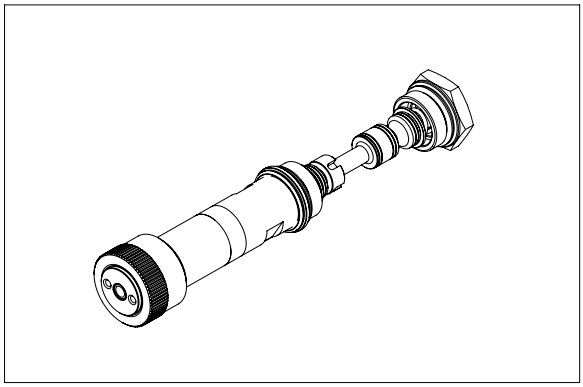

The solenoid valve can be ordered with 3 types of ports for connection nipples, G 3/8" 9/16"-18 UNF (SAE6) and M16x1,5. Spool actuation is electrical and the center position is maintained through centering springs with calibrated length, upon termination of the solenoid action, springs immediately reposition the cursor in the central position.The solenoids are only available in the continues current (the most common strains); the coil will be supply with terminals DIN 43650 ISO 4400 (for stadard versions). The valve have cast iron body with black galvanizing surface treatment with sealant.

TECHNICAL DATA

Max pressure	320 bar (4600 psi)
Rated flow	25 l/min (6,5 gpm)
Duty cycle	100 % ED
Max current	1.76A(12 V dc) 0.88A (24 V dc)
Hydraulic fluid	Mineral oil DIN 51524
Fluid viscosity	10-500 mm²/s (0,02-0,78 in²/s)
Fluid temperature	-25°C/75°C (-13°F/167°F)
Enviroment temperature	-25°C/60°C (-13°F/140°F)
Weight with one solenoid	2 kg (4,4 lb)
Weight with two solenoid	2,5 kg (5,5 lb)

ORDERING DETAILS: SEPARATE ELEMENTS

SH[*][*]-0[**]-POPR-[**]-321-[*][**]N

*	OVERRIDE TYPE
N	Standard
P	Push
V	Screw

*	SECTION TYPE
E	Solenoid operated
L	Solenoid operated plus lever operated
M	Lever operated

**	SPOOL FLOW
10	12 l/min at 10 bar (2,5 gpm at 145 psi)
20	18 l/min at 10 bar (5 gpm at 145 psi)
30	25 l/min at 10 bar (6,5 gpm at 145 psi)

**	PROPORTIONAL TYPE
88	Not compesated

*	VOLTAGE
	no coils
A	12 V dc
B	24 V dc

**	COILS TYPE
	no coils
HR	Hirschmann (ISO 4400 DIN 43650)
DT	Deutsch (DT04-2P)
AJ	Amp junior (AJ type)

QUICK CODE	
DESCRIPTION	CODE
SHNE-030-POPR-88-321	
SHNE-020-POPR-88-321	
SHNE-010-POPR-88-321	

TECHNICAL FEATURES

Spool Flow	Rated flow with 10 bar (140 psi) ΔP	Maximum flow	Max. operating pressure
10	10 l/min (2,5 gpm)	12 l/min (3 gpm)	320 bar (4600 psi)
20	16 l/min (4 gpm)	18 l/min (5 gpm)	320 bar (4600 psi)
30	23 l/min (6 gpm)	28 l/min (7 gpm)	320 bar (4600 psi)

HYDRAULIC SYMBOLS

Table n°1

SPOOL CODE	HYDRAULIC SCHEME	TRANSITORY POSITION
88	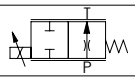	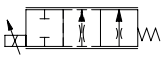

OVERRIDE TYPE

Dimensions: mm [inches]

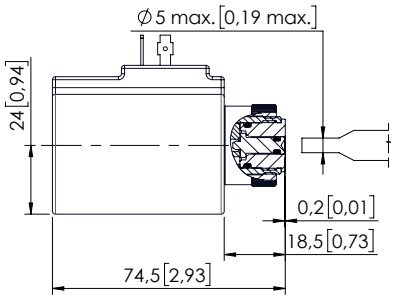

OVERRIDE TYPE "N"

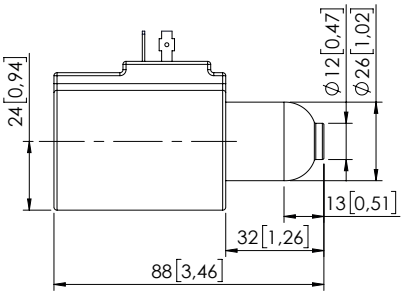

OVERRIDE TYPE "P"

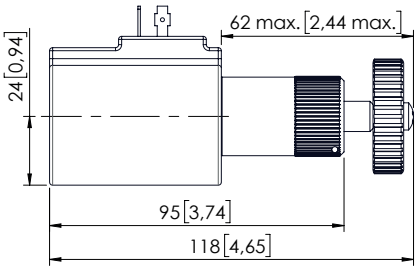

OVERRIDE TYPE "V"

SHNE-030-PRPO

30 L/MIN (8 gpm)
PROPORTIONAL FLOW
UNLOADING

ATLANTIC Fluid Tech

FLOW DIAGRAM - 030

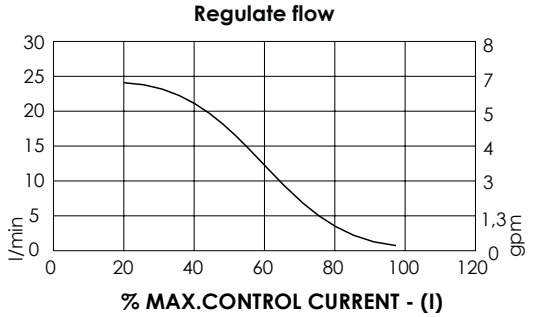

PRESSURE DROP DIAGRAM - 030

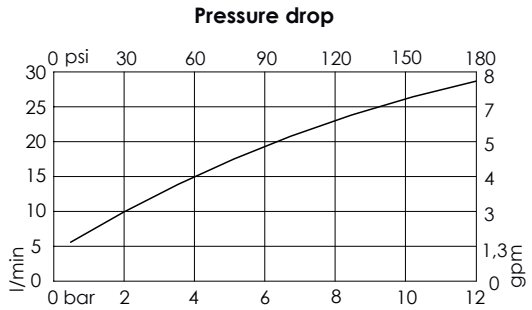

FLOW DIAGRAM - 020

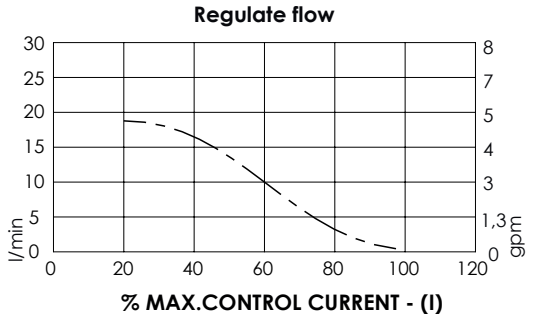

PRESSURE DROP DIAGRAM - 020

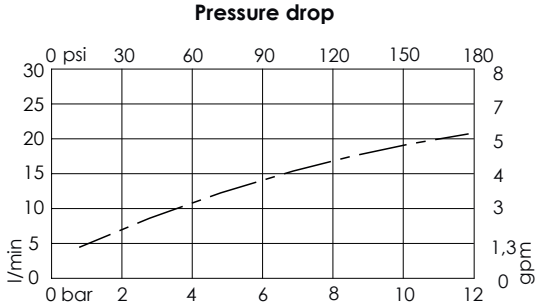

FLOW DIAGRAM - 010

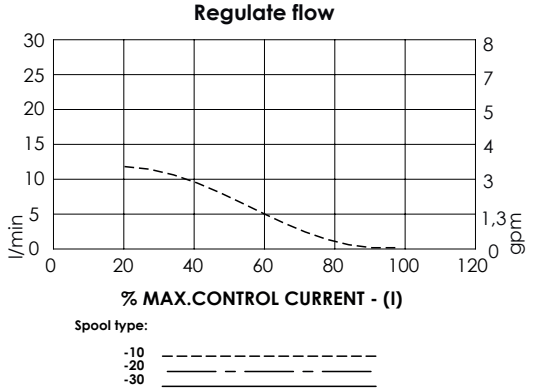

PRESSURE DROP DIAGRAM - 010

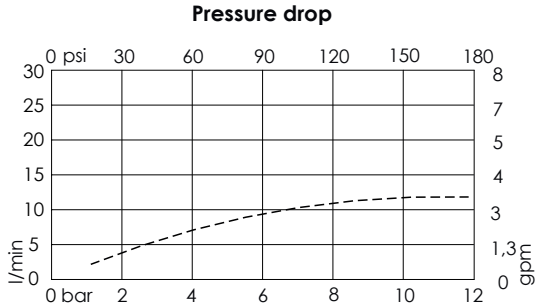

The diagram shows the performance limit curve of a standard section. The fluid used is mineral oil with viscosity of 46 mm²/s @ 40 °C (0,07 in²/s @104°F); the tests are performed at a 40 °C (104°F) temperature.

OVERALL DIMENSION - STANDARD SECTION

Dimensions: mm [inches]

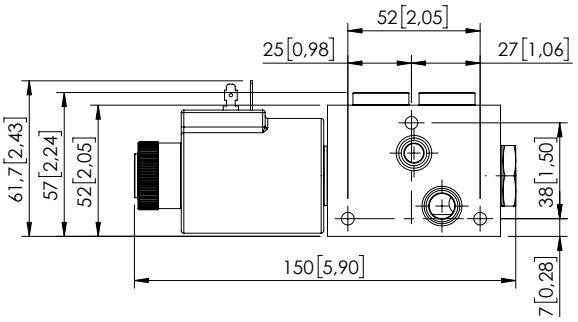

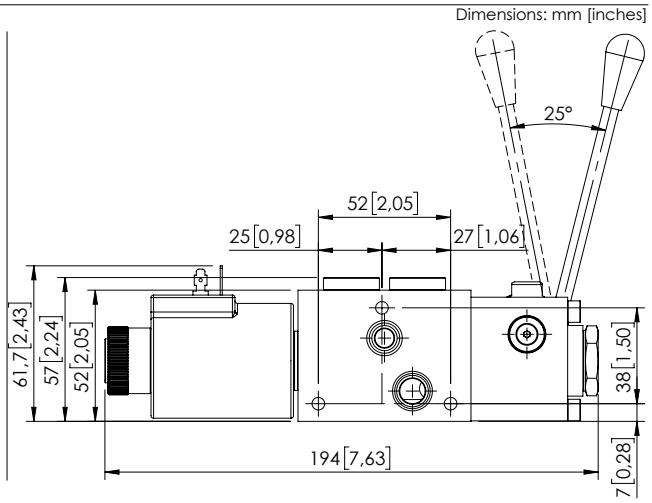

MANUAL LEVER

ATLANTIC Fluid Tech

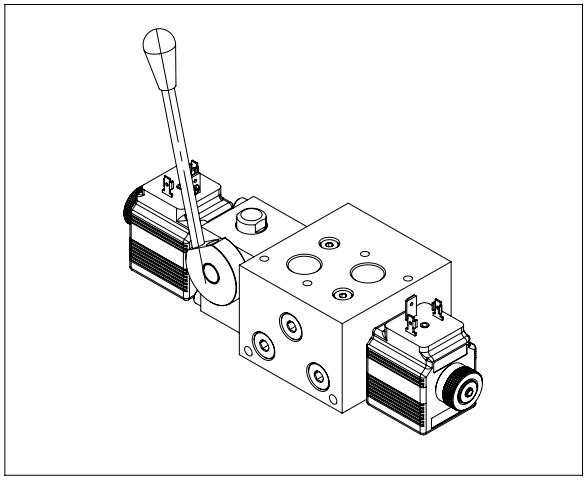

The lever option allow to operate manually the spool and can be ordered for all hydraulic schemes; in the standard version it is installed between monoblock and B port side coil.
The lever is normally installed on the monoblock port side but can be installed also rotated of 180°; , in each of these two positions the lever can be mounted vertical or horizontal simply removing the lever and reinstalling.
The lever is not engaged during solenoid operation and doesn't move when a coil is energized.

TECHNICAL DATA

Tabella generale	
Max pressure	210/320 bar (3000/4600 psi)
Max pressure series version	210 bar (3000 psi)
Rated flow	30/60 l/min (8-16 gpm)
Duty cycle	100 % ED
Weight more than standard	2 kg (4,4 lb)
Weight more than standard	2,5 kg (5,5 lb)

OVERALL DIMENSIONS/ LEVER FOR 30 L/MIN SECTION

The lever option is designed to activate the spool manually, when the lever is pulled the flow is delivered from the port close to the lever, when it is pushed the flow is delivered from the port opposite to the lever.
The standard operation deliver full flow, in case of override operation it is possible to reduce the maximum stroke and consequently the speed, for this option contact AFT sales network.
The lever can be easily positioned vertical or horizontal by unscrewing it from the rotating shaft.

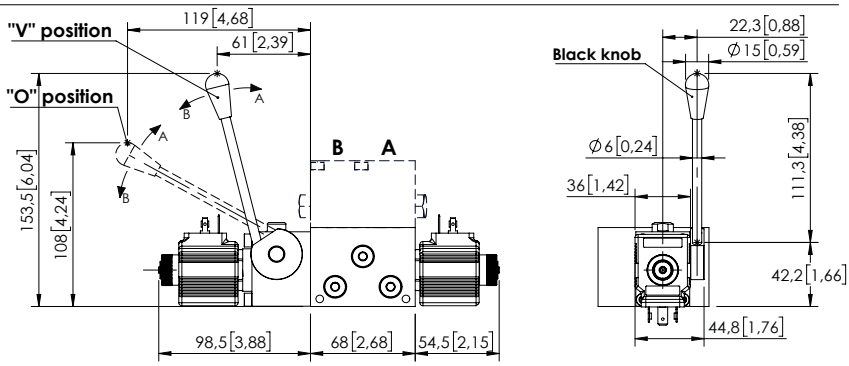

OVERALL DIMENSIONS/ LEVER FOR 60 L/MIN SECTION

The lever option is designed to activate the spool manually, when the lever is pulled the flow is delivered from the port close to the lever, when it is pushed the flow is delivered from the port opposite to the lever.
The standard operation deliver full flow, in case of override operation it is possible to reduce the maximum stroke and consequently the speed, for this option contact AFT sales network.
The lever can be easily positioned vertical or horizontal by unscrewing it from the rotating shaft.

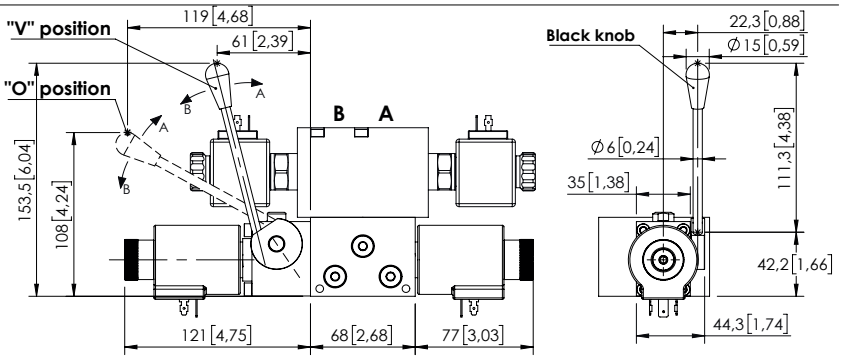

OVERALL DIMENSION/ LEVER FOR 30 L/MIN UNLOADING SECTION

The lever option is designed to activate the spool manually, when the lever is pulled the flow is delivered from the port close to the lever, when it is pushed the flow is delivered from the port opposite to the lever.
The standard operation deliver full flow, in case of override operation it is possible to reduce the maximum stroke and consequently the speed, for this option contact AFT sales network.
The lever can be easily positioned vertical or horizontal by unscrewing it from the rotating shaft.

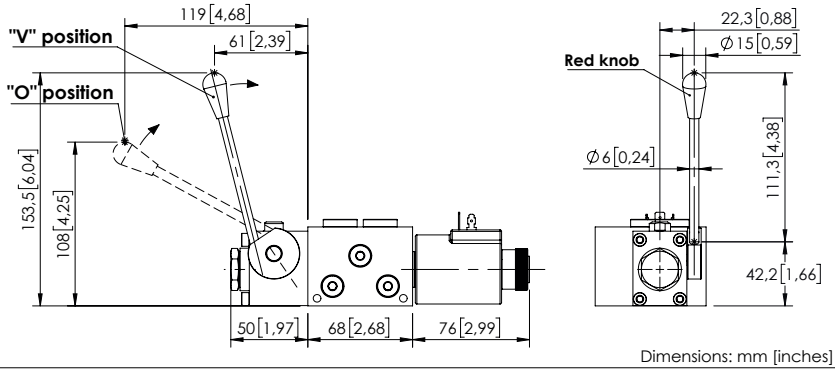

Dimensions: mm [inches]

MOUNTING ELEMENTS

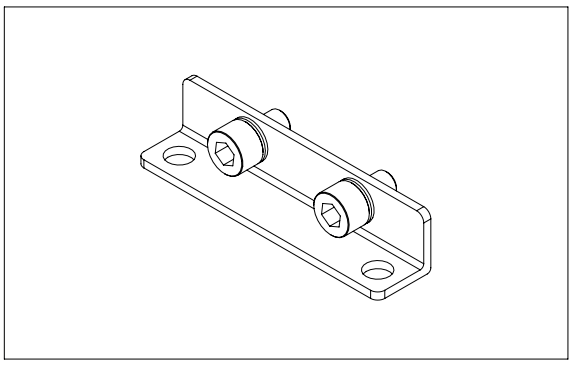

These parts are used to mount the directional valve on the application or to install modular valves and inlet section on the monoblock.

TECHNICAL DATA

Screw type	ISO 4762
Thread type	coarse thread
Standard screw	resistence class 8.8
High resistence screw	resistence class 12.9
Standard screw treatment	zinc-plated (white)
High res. screw treatment	Anodized (black)

MOUNTING BRACKETS

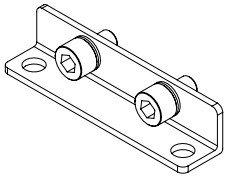

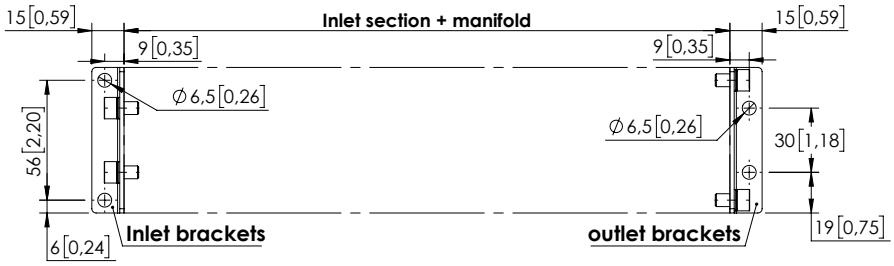

Mounting brackets	Screw lenght	Reference	Tightening Torque
PV000371	M6x10 [M6x0,39]	AV000015 + PR000129	6-7 N/m [4-5 ft-lb]

MOUNTING INLET SECTION

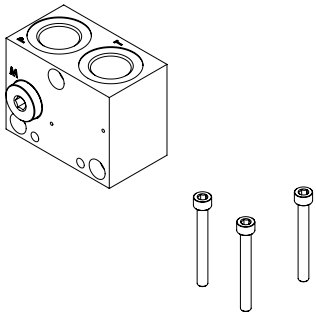

Inlet section	Screw lenght	Reference	Tightening Torque
SF000004	M6X40 [M6x1,57]	AV000051	6-7 N/m [4-5 ft-lb]
SF000016	M6X50 [M6x1,97]	PE000100	6-7 N/m [4-5 ft-lb]
SF000003	M6X60 [M6x2,36]	AV000074	6-7 N/m [4-5 ft-lb]
SF000002	M6X60 [M6x2,36]	AV000074	6-7 N/m [4-5 ft-lb]
SF000001	M6X75 [M6x2,95]	PE000418	6-7 N/m [4-5 ft-lb]

FIXING STACKING MODULES

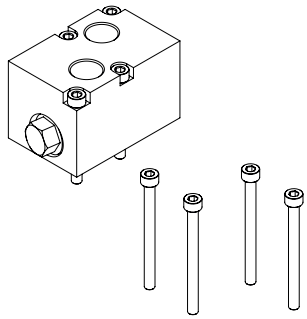

Flangiable valve	Screw lenght	Reference	Tightening Torque
MP	M5x16 [M5x0,63]	AV000035	3-4 N/m [2-3 ft-lb]
MA, MC and MB	M5x45 [M5x1,77]	PE000148	3-4 N/m [2-3 ft-lb]
KE and MF	M5x60 [M5x2,36]	AV000016	3-4 N/m [2-3 ft-lb]

Dimensions: mm [inches]